STATE OF CALIFORNIA

CALIFORNIA LAW REVISION COMMISSION

RECOMMENDATION

proposing

New Probate Code

December 1989

CALIFORNIA LAW REVISION COMMISSION
4000 Middlefield Road, Suite D-2
Palo Alto, California 94303-4739

THE CALIFORNIA LAW REVISION COMMISSION

COMMISSION MEMBERS

EDWIN K. MARZEC
Chairperson

ROGER ARNEBERGH
Vice Chairperson

BION M. GREGORY
Member

ELIHU M. HARRIS
Member of Assembly

BILL LOCKYER
Member of Senate

ARTHUR K. MARSHALL
Member

FORREST A. PLANT
Member

ANN E. STODDEN
Member

VAUGHN R. WALKER
Member

VACANCY
Member

COMMISSION STAFF

Legal

JOHN H. DEMOULLY
Executive Secretary

NATHANIEL STERLING
Assistant Executive Secretary

ROBERT J. MURPHY III
Staff Counsel

STAN G. ULRICH
Staff Counsel

Administrative-Secretarial

STEPHEN F. ZIMMERMAN
Administrative Assistant

EUGENIA AYALA
Word Processing Technician

VICTORIA MATIAS
Word Processing Technician

NOTE

The Commission's annual reports and its recommendations and studies are published in separate pamphlets which are later bound in permanent volumes. The page numbers in each pamphlet are the same as in the volume in which the pamphlet is bound. The purpose of this numbering system is to facilitate consecutive pagination of the bound volumes. This pamphlet will appear in Volume 20 of the Commission's *Reports, Recommendations, and Studies* which is scheduled to be published late in 1991.

Cite this pamphlet as *Recommendation Proposing New Probate Code*, 20 Cal. L. Revision Comm'n Reports 1001 (1990).

STATE OF CALIFORNIA

CALIFORNIA LAW REVISION COMMISSION

RECOMMENDATION

proposing

New Probate Code

December 1989

CALIFORNIA LAW REVISION COMMISSION
4000 Middlefield Road, Suite D-2
Palo Alto, California 94303-4739

CONTENTS

Page

Letter of Transmittal 1005

Acknowledgments 1007

Recommendation 1033
(A detailed outline of the recommendation begins on page 1033)

Outline of New Probate Code 1053

Comments to New Probate Code 1127

Comments to Sections of Repealed Probate Code Not Continued in New Code 1989

Comments to Conforming Revisions in Other Codes 1995

STATE OF CALIFORNIA GEORGE DEUKMEJIAN, Governor

CALIFORNIA LAW REVISION COMMISSION
4000 MIDDLEFIELD ROAD, SUITE D-2
PALO ALTO, CA 94303-4739
(415) 494-1335

EDWIN K. MARZEC
CHAIRPERSON
ROGER ARNEBERGH
VICE CHAIRPERSON
BION M. GREGORY
ASSEMBLYMAN ELIHU M. HARRIS
SENATOR BILL LOCKYER
ARTHUR K. MARSHALL
FORREST A. PLANT
ANN E. STODDEN
VAUGHN R. WALKER

December 1, 1989

To: The Honorable George Deukmejian
Governor of California, and
The Legislature of California

This recommendation proposes the enactment of a new Probate Code to replace the existing Probate Code.

In 1980, the Commission was directed to make a systematic review of the entire Probate Code. In response to this directive, the Commission submitted a series of recommendations that resulted in the enactment of legislation that has revised substantially all of the existing Probate Code. Enactment of the proposed new code is the last step in the Probate Code revision process. The new code makes numerous technical, clarifying, conforming, and minor substantive revisions in the existing provisions.

Assembly Bill 759 was introduced at the 1989 legislative session by Assembly Member Friedman to effectuate this recommendation. The bill was amended in the Assembly May 30, 1989, and the Commission has prepared a second set of amendments to the bill to be made early in 1990. This recommendation explains the bill as it will exist after the second set of amendments is made.

This recommendation explains the significant revisions the new code makes in the existing Probate Code. The text of the new Probate Code is not set out in this publication; the text of the new code as recommended by the Commission is set out in Assembly Bill 759 as it will be amended early in 1990.

This publication contains a Comment to each section of the new Probate Code. The Comment gives the source of the section and indicates whether the section continues the existing code section without change. If a substantive change is made by the new code section, the Comment describes the change. The Comment may also explain the

purpose of the section, its relation to other sections, and potential problems in its meaning or application. To a large extent, the Comments simply continue the substance of Comments to the existing Probate Code. The terminology used in the Comments is discussed in the Comment to Section 2 of the new code.

The Comments are written as if the new code were enacted since their primary purpose is to explain the new code to those who use it after it is in effect. The Comments are entitled to substantial weight in construing the new code. See, e.g., Milligan v. City of Laguna Beach, 34 Cal. 3d 829, 831-32, 670 P.2d 1121, 1122, 196 Cal. Rptr. 38, 39 (1983). Commission Comments are published by both Bancroft-Whitney and West Publishing Company in their editions of the annotated codes.

The Comments assume that the Commission-recommended legislation relating to the compensation of the probate estate attorney and personal representative will be enacted in 1990. That legislation will be the subject of a separate bill to be acted upon by the Legislature in 1990. Assembly Bill 759, proposing the new code, will be amended, and the Comments revised, to conform to the separate compensation legislation as enacted in 1990. Accordingly, any policy issues concerning probate estate attorney fees will be presented by separate legislation, not by Assembly Bill 759.

The Commission also plans to submit separate bills to the 1990 legislative session proposing significant substantive revisions in probate law. These bills will be drafted so that they make revisions in the new Probate Code.

The Commission devoted substantially all of its time and resources to the probate law study for a number of years. Persons and organizations that assisted in the study are noted in the Acknowledgments which follow.

This recommendation is submitted pursuant to Resolution Chapter 37 of the Statutes of 1980.

Respectfully submitted,

Edwin K. Marzec
Chairperson

ACKNOWLEDGMENTS

A great number of people have been involved in the preparation of the new Probate Code. The organizations and individuals who have participated in this project are listed below. The Commission acknowledges the assistance provided both by those who supported its proposals as well as those who were opposed. The inclusion of an organization or individual's name should not be taken as an indication of the organization's position or of the individual's opinion on any part of the new Probate Code. The Commission regrets any errors or omissions that may have been made in compiling these acknowledgments.

Former Commissioners

A number of former members of the Law Revision Commission participated in the Probate Code project since 1980: Judith Meisels Ashmann, Robert J. Berton, Roslyn P. Chasan, George Y. Chinn, James H. Davis, John B. Emerson, Debra S. Frank, Senator Barry Keene, Beatrice P. Lawson, Thomas S. Loo, Jean C. Love, Assembly Member Alister McAlister, Tim Paone, Senator Omer L. Rains, David Rosenberg, and Warren M. Stanton.

Legislators

The Commission is greatly indebted to the legislators who carried the bills that effectuated the many recommendations proposed in the course of the Probate Code project: Senators Robert G. Beverly, Barry Keene, and Bill Lockyer; Assembly Members Terry B. Friedman, Elihu M. Harris, Alister McAlister, and Byron Sher.

Expert Consultants

Expert consultants who assisted in the Probate Code project are: Charles W. Adams (University of Tulsa Law School), Paul E. Basye (Hastings College of the Law), Gail Boreman Bird (Hastings College of the Law), James L. Blawie (University of Santa Clara Law School), Jesse Dukeminier (U.C.L.A. Law School), Garrett H. Elmore, Susan F. French (U.C. Davis Law School), Edward C. Halbach Jr. (U.C. Berkeley Law School), Russell D. Niles (Hastings College of the Law), William A. Reppy Jr. (Duke Law School), Stefan A. Riesenfeld (U.C. Berkeley Law School), Bruce Wolk (U.C. Davis Law School). These consultants provided research studies and expert commentary on staff-prepared materials.

Organizations

The Commission has received valuable assistance from various organizations, associations, and agencies throughout this project.

Representatives of these groups regularly attended lengthy Commission meetings. Extensive commentary was submitted by a multitude of committees, subcommittees, review teams, and task forces, all of which helped the Commission in preparing the new Probate Code. The Commission benefited immeasurably from the expert advice and insight given by representatives of these organizations. The Commission wishes especially to thank those whose assistance extended from the beginning of the study of a particular topic, through preparation of a recommendation, and finally to participation in the legislative process. This list does not include a specific title for each committee or subcommittee that may have assisted the Commission.

Bar Associations

Alameda County Bar Association
Attorneys Probate Association
Bar Association of San Francisco, Probate and Trust Law Section
Beverly Hills Bar Association, Probate, Trust and Estate Planning Section
California State Bar
  Estate Planning, Trust and Probate Law Section
  Family Law Section
  Legal Problems of the Aging Committee of the Legal Services Section
  Taxation Section
Fresno County Bar Association, Estate Planning, Income Tax and Probate Section
Imperial County Bar Association
Kern County Bar Association, Probate and Estate Planning Section
Los Angeles County Bar Association
  Bioethics Committee
  Probate and Trust Law Section
  State and Local Tax Committee
Marin County Bar Association, Probate and Estate Planning Section
San Bernardino County Bar Association, Probate Section
San Diego County Bar Association, Estate Planning, Probate and Trust Law Section
San Luis Obispo County Bar Association
San Mateo County Bar Association, Probate Section
Santa Clara County Bar Association
Stanislaus County Bar Association

Government Agencies

Attorney General's Office
Board of Equalization
Department of Developmental Services
Department of Health Services
Department of Housing and Community Development
Department of Motor Vehicles
Employment Development Department
Franchise Tax Board
Internal Revenue Service
Judicial Council
Secretary of State's Office
State Controller's Office

Veterans Administration

Other Groups

American Association of Retired Persons
American Institute of Real Estate Appraisers
Bay Area Advocates for Nursing Home Reform
California Appraisers Council
California Association of Public Administrators, Public Guardians, and Public Conservators
California Association of Realtors
California Bankers Association
California Continuing Education of the Bar
California Land Title Association
California Newspaper Service Bureau
California Probate Referees' Association
California State Genealogical Alliance
CALJustice
Center for Public Interest Law
Consumer Federation of California
County Recorders' Association
HALT
Legal Center for the Elderly and Disabled
National Newspaper Association
National Notary Association
National Retired Teachers Association
San Francisco Consumer Action
San Gabriel Valley Legal Secretaries Association

Individuals

Since 1980, numerous individuals have assisted the Commission in its task by reviewing drafts and tentative recommendations, responding to questionnaires, and attending Commission meetings and legislative hearings. Many of the persons listed below acted on behalf of a bar association or other professional organization, interest group, or governmental agency; the remainder assisted the Commission as individuals. Persons who attended one or more Commission meetings are indicated by an asterisk.

Roy Aaron
Los Angeles

Timothy Abel
Hayward

Alan K. Achen
Los Angeles

Miles D. Adams
San Ramon

Philip Adams
San Francisco

Elaine Afable
Los Angeles

Craig C. Alexander
Newport Beach

George Alexander*
Santa Clara

Gregory S. Alexander
Ithaca, NY

Lisa Alexander
Santa Monica

Russell G. Allen
Newport Beach

Glenn Alperstein
Sherman Oaks

Howard C. Alphson
Santa Monica

Jeffrey A. Altman
Los Angeles

Edna R. S. Alvarez
Los Angeles

Robert C. Amore*
San Francisco

Antoinette Gump Amorteguy
Santa Barbara

Raymond A. Amrhein
Watsonville

Alvin L. Anderson
San Jose

Cheryl Glen Anderson
San Jose

Michael J. Anderson
Sacramento

Peter Anderson
King City

Robin Leigh Anderson
Santa Barbara

Rosalie E. Andrews
Sacramento

Henry Angerbauer
Concord

Hartley R. Appleton
Daly City

David J. Arata
San Jose

Raymond J. Arata Jr.
San Francisco

Kenneth J. Arnold
San Francisco

Lou Aronian
San Francisco

George E. Atkinson Jr.
Paramount

J. Mark Atlas
Willows

Edgar W. Averill Jr.
Whittier

Luther J. Avery
San Francisco

Paul W. Avery*
Concord

A. Richard Backus
Sacramento

Barbara Bailey
Beverly Hills

Borgny Baird
Long Beach

James B. Baker
Campbell

Jon A. Baker
Upland

Rodney Alan Baker
Coulterville

William A. Baker
Santa Ana

Russell P. Baldo
Auburn

Kathryn A. Ballsun
Los Angeles

John E. Balluff*
Sacramento

Paula Bankett
San Francisco

Robert D. Bannon*
Los Angeles

Grace K. Banoff
La Jolla

Josephine D. Barbano*
San Diego

Pamela D. Barker
Los Angeles

Douglas P. Barnes
Campbell

Patrick L. Barnes
Arcadia

June L. Barnum
San Francisco

James D. C. Barrall
Beverly Hills

George C. Barrett
Merced

Marika A. Barszcz*
Sacramento

Keith P. Bartel
Burlingame

Paul L. Basile Jr.
Los Angeles

Richard L. Bate
Sherman Oaks

Bob Beatty
Los Angeles

Barbara A. Beck
San Jose

Richard Belcher
Stockton

Douglas D. Bell
Sacramento

W. E. Bell
Los Angeles

Michael D. Belote*
Sacramento

Howard L. Berman
Washington, DC

Amy J. Bernstein
Oak Park, IL

Phillip B. Berry
Placerville

Robert J. Berton
San Diego

Beryl A. Bertucio
Oakland

James P. Bessolo*
Los Angeles

Richard Betts*
Berkeley

Ann Bezaire
Alhambra

Neil S. Bezaire
San Marino

Joel Biatch
Oakland

Ira E. Bilson
Los Angeles

D. Keith Bilter
San Francisco

Douglas Bird*
San Francisco

Elizabeth Bird*
San Francisco

James R. Birnberg
Los Angeles

Martin L. Blaha
San Mateo

Robert G. Blanchard
Glendale

Jonathan G. Blattmachr
Los Angeles

James L. Blawie
Santa Clara

Marsden S. Blois
San Jose

Judith Ilene Bloom
Los Angeles

Frank B. Blum Jr.
Daly City

Fred H. Bock*
Lompoc

Ronald C. Bock*
Lompoc

Edward J. Boessenecker
San Francisco

Peter D. Bogart
Los Angeles

R. J. Bohl
San Bernardino

Thomas P. Bohnen
Monterey

E. Burdette Boileau
Pomona

Frederick Bold Jr.
Walnut Creek

Bruce C. Bolinger
Nevada City

Alan D. Bonapart
San Francisco

Cecily Bond
Sacramento

Rolf M. Bondelie
Los Gatos

Jack F. Bonnano
San Francisco

Delores M. Bonner
West Hills

Louis W. Bookheim
San Diego

Elton D. Boone
Inglewood

Scott Boone*
Pasadena

Edward Howard Bordin*
Castro Valley

John T. Borje
Claremont

David M. Bosko
Los Angeles

Lorcan J. Bowden*
Richmond

Richard B. Bowden
Palo Alto

Donald L. Bowen
Brookfield, WI

Merrilee Boyak
Saratoga

Stephen A. Brandenburger*
Sacramento

Arthur H. Bredenbeck
Burlingame

Edward V. Brennan*
San Diego

Eugene J. Brenner
San Francisco

Peter H. Bridge
Washington, DC

Arthur R. Bridgeman
San Francisco

Susan S. Briggs
San Francisco

Arlen Bristol
Los Angeles

E. S. Broach
Stanford

Gail Brod
Los Angeles

Olin L. Browder
Ann Arbor, MI

Arthur Steven Brown
Los Angeles

Diane M. Brown
Campbell

Hermione K. Brown
Los Angeles

J. Michael Brown
Eureka

John Wilson Brown*
San Diego

Jonathan A. Brown
Sacramento

Ronnie Brown*
La Jolla

Thomas M. Brownscombe
Santa Rosa

Leland W. Bruner
San Leandro

McKnight Brunn
Oakland

Frances S. Brunner
Rimrock, AZ

Alvin G. Buchignani
San Francisco

Sam Buckles*
Sacramento

John Burghardt
Chico

Lon M. Burns
Los Angeles

Susan Howie Burriss
Mountain View

Douglas Butler
Torrance

William M. Butler
Santa Clara

Clark R. Byam
Pasadena

Hannah Byron*
Sacramento

Charles V. Caillat
San Jose

Barbara A. Cain
San Rafael

Clifford C. Caldwell
El Centro

Gary L. Caldwell
Santa Maria

Merlin W. Call
Los Angeles

T. E. Calleton
Los Angeles

Daniel M. Cameron
Sacramento

Patricia Campbell
Oakland

Willard R. Campbell
San Jose

Jacqueline Cannon*
Riverside

Anthon S. Cannon Jr.
Los Angeles

Phyllis Cardoza*
Los Angeles

Judy L. Carver
Sacramento

Anthony M. Caselli
San Jose

A. T. Cassell Jr.
Mill Valley

Eileen Cassidy
Los Angeles

Raymond V. Castello
Campbell

Clifford C. Cate*
Glendale

R. S. Cathcart
San Francisco

Robert M. Cavallaro
San Jose

Verner F. Chaffin
Athens, GA

Deborah Chalfie*
Washington, DC

Paul H. Chamberlain
Auburn

Mayer Chapman
Long Beach

Byron Chell
Fair Oaks

Shirley Chilton
Sacramento

Nicholas S. Chrisos*
Santa Ana

Cherie Christensen
San Jose

Renatus R. J. Chytil
Los Angeles

Colleen M. Claire
Newport Beach

Sterling S. Clayton
Long Beach

Arthur L. Close
Vancouver, BC

Wilbur L. Coats
Poway

James R. Cody
Burlingame

Carol Spell Coelho
Brentwood

William J. Coffill
Sonora

Rawlins Coffman
Red Bluff

Harry C. Cogen
Los Angeles

Kathleen Cole
Alameda

Thomas F. Coleman
Los Angeles

Charles A. Collier Jr.*
Los Angeles

Francis J. Collin Jr.
Napa

Carroll J. Collins III
San Francisco

Patricia A. Conley
Berkeley

Charles Conway
San Diego

Kenneth Wm. Cooley
Sacramento

Jack E. Cooper
San Diego

Richard J. Cooper
San Jose

Stan Cooper
Washington, DC

Henry Coopersmith
Santa Ana

William D. Corbett
San Leandro

Lawrence C. Counts
Sacramento

Elizabeth F. Courtney
Montclair

Kenneth G. Coveney
San Diego

Caspar F. Cowan
Portland, ME

Larry J. Cox
Sacramento

Larry R. Cox
Bakersfield

Daniel B. Crabtree
San Diego

Phil Craig
San Luis Obispo

Theodore J. Cranston*
La Jolla

Thomas A. Craven
Sacramento

Austin A. Crawford
San Diego

J. K. Creamer Jr.
San Francisco

Alexander E. Creel*
Sacramento

Barbara A. Curry
San Diego

Shawn J. Curtin
San Rafael

Jerome J. Curtis Jr.
Sacramento

Thomas Curtiss Jr.
Los Angeles

Myron W. Curzon
Los Angeles

Allan B. Cutrow
Los Angeles

Carloyn Dalyne
San Diego

Dorothy Dana
San Francisco

Curtis Darling
Bakersfield

Edmond R. Davis
Los Angeles

William Davis*
Sacramento

William E. Davis
San Francisco

Deborah DeBow*
Sacramento

Betsy del Pozo
San Diego

J. Nick DeMeo
Santa Rosa

Susan A. DeSantis
Sacramento

Dorothy Delaney-Gauger*
Chula Vista

Jeffrey A. Dennis-Strathmeyer*
Berkeley

Estelle M. Depper
San Francisco

Michael Desmaris
San Jose

John R. Dettner
San Francisco

James D. Devine*
Monterey

Philip A. DiMaria
Palo Alto

Linda Diamond
Encino

John M. Dietrich
Billings, MT

John H. Dimalanta
San Francisco

Demetrios Dimitriou
San Francisco

Dianna L. Dirks
Modesto

Joel Charles Dobris
Davis

Kenneth W. Donelson
Sacramento

Raymond V. Donn
San Jose

Albert A. Dorn
Los Angeles

Stephen Dorsi
San Luis Obispo

Walter M. Douglas
Glendora

Michael J. Downer
Los Angeles

Kathie Downie
San Jose

Harry P. Drabkin
Modesto

Bernard P. Drachlis
Los Angeles

Edmund A. Duggan
San Francisco

John A. Dundas II
Pasadena

Verdine B. Dunham
Red Bluff

Charles A. Dunkel
San Francisco

Raymond V. Dunn
San Jose

Linda J. Dvorak
Redwood City

Kevin Eckard
Placerville

Warren H. Eckert
Long Beach

Richard W. Effland
Tempe, AZ

James Efting
Sunnyvale

Donald R. Egan
Victorville

Leo E. Eickhoff Jr.
St. Louis, MO

Robert C. Elkus
San Francisco

Peter K. Ellison
Salt Lake City, UT

Ethel Enyingi
Los Angeles

John A. Ertola
San Francisco

David J. Erwin
Palm Desert

Norman A. Fagin
Los Angeles

Robin D. Faisant
Menlo Park

Robert H. Faust
Arcadia

Frank E. Feder
Los Angeles

Kenneth A. Feinfield*
Los Angeles

Edward G. Feldman
Los Angeles

Mary Louise Fellows
Iowa City, IA

Jonathan Ferdon*
San Francisco

Michael C. Ferguson
Berkeley

Nancy E. Ferguson*
Sacramento

William E. Ferguson*
La Jolla

Maria A. Ferrari
Los Altos

Neil H. Ferstand
Orangevale

Ronald G. Fick
San Mateo

L. Mark Fingerlin
San Diego

William Finnegan
Walnut Creek

Owen G. Fiore
Saratoga

Kathleen V. Fisher
San Francisco

Cheryl Fletcher
Woodland

Gordon A. Fleury
Sacramento

David B. Flinn
San Francisco

Anthony A. Folcarelli
Sacramento

Charles F. Forbes
Los Angeles

Albert J. Forn
Los Angeles

Janice W. Fox
San Jose

William E. Fox
Paso Robles

John W. Francis*
La Habra

Mark Franich
San Jose

James B. Frankel
San Francisco

Benjamin D. Frantz
Sacramento

William F. Fratcher
Columbia, MO

Frank Freeland*
Campbell

Robert J. Freidman
Beverly Hills

Frank L. Freitas
San Luis Obispo

Robert Friedberger*
Stockton

K. Bruce Friedman*
San Francisco

James R. Frolik
San Francisco

Nanna K. Frye
San Diego

Lillian T. Fujii
Martinez

Dorothy H. Futch
San Francisco

George R. Gallucci
Santa Cruz

Carol E. Gamble
Berkeley

Carol Gandy
Santa Ana

Andrew S. Garb
Los Angeles

William T. Garner
Long Beach

Antonio J. Gaudio
South San Francisco

Helen Gaulden
Yreka

William C. George*
Sacramento

Fred W. Gerbino Jr.
Campbell

Lawrence E. Gercovich
Sacramento

Ron Gerringer
Wilton

Gerald F. Gerstenfeld
Beverly Hills

Peter J. Giamalis
Palo Alto

Louis F. Gianelli*
Modesto

L. Andrew Gifford
Los Angeles

Dugald Gillies*
Sacramento

Louis J. Giraudo
San Francisco

Jonathan Gladstone
San Francisco

Constantine Glafkides
Daly City

James P. Gleason
Sacramento

Paul J. Goda*
Santa Clara

Douglas E. Godbe
Newport Beach

John J. Golden
Lakeport

John P. Golden
San Mateo

Hyman Goldman
Los Angeles

Robert A. Goldman
San Francisco

Irwin D. Goldring*
Los Angeles

James R. Goodwin*
San Diego

Herbert M. Gordon
Berkeley

Mary S. Gordon
San Francisco

Richard A. Gorini
San Jose

Ronald E. Gother
Los Angeles

Dennis J. Gould
Oakland

Stephen G. Gould
San Francisco

JoAnn W. Grace
Los Angeles

Herbert Graham
Los Angeles

Gordon Granger
Houston, TX

Irvin Grant
Santa Monica

Nancy Grant*
Sacramento

Lawrence E. Green
Sacramento

Bernard A. Greenberg
Beverly Hills

George Gregory
Stanford

John E. Griffin
Modesto

Robert Griffin
San Luis Obispo

John A. Gromala
Fortuna

Laddy H. Gross
Mountain View

William I. Groth
San Francisco

Dan Grothe*
Lakeport

Candace J. Grubbs
Oroville

Eugene T. Gualco
Sacramento

Linda Gunderson
Laguna Hills

Ruth Church Gupta
San Francisco

Lino M. Guslani
Palo Alto

John Gussman
Oakland

John L. Guth
Yuba City

Jimmy L. Gutierrez
Chino

David A. Guttman
Van Nuys

Madeline A. Haecherl
Solana Beach

Roland Hall
Santa Cruz

Steven Halpern
Pacific Palisades

Clarence Hancock
South Pasadena

Albert G. Handelman
Los Angeles

Michael D. Handlos
San Francisco

John Hanft
San Francisco

Mark B. Hankin
Beverly Hills

Christopher R. Haran
San Francisco

Ada J. Harlan
Helena, MT

Donald W. Harley
Oakland

Robert M. Harlick
San Francisco

Judith A. Harper
Sacramento

Linda Harrington
San Francisco

Michael J. Harrington*
San Francisco

Mark T. Harris*
Sacramento

Thea Harris
Los Angeles

Robert L. Harrison
San Francisco

Lynn P. Hart
San Francisco

Patricia Hart*
Sacramento

John S. Hartwell
Livermore

Jay N. Hartz
Los Angeles

Richard M. Hawkins
Grass Valley

John Finnbarr Hayes*
Berkeley

Robert C. Hays
San Francisco

Susan J. Hazard
Los Angeles

Gerald Hedden
Santa Barbara

David M. Heilbron
San Francisco

Edwin A. Heisler
Portland, ME

Neil A. Helding
Hanford

William S. Hellyer
San Bernardino

James R. Helms Jr.
Arcadia

Richard W. Henson
San Carlos

Peter Hentschel
Quincy

Ricardo Hernandez*
San Francisco

James J. Herrick
Palo Alto

Patricia R. Hersom*
Berkeley

Harcourt Hervey III
South Pasadena

Robert P. Hess
Los Angeles

Charles J. Heyler
Palo Alto

Rita A. Hildreth
Marysville

Anne K. Hilker*
Los Angeles

Jerry W. Hill
Sacramento

John C. Hoag
Los Angeles

John R. Hodges
Hollister

George I. Hoffman
San Francisco

Paul Gordon Hoffman
Los Angeles

S. Hoffman
Los Angeles

William L. Hoisington*
San Francisco

Elize Hollander*
Santee

Dawne W. Hollis
Palo Alto

James E. Holst
Berkeley

Carla Holt
Campbell

Rebecca L. Holt
Santa Monica

Lloyd W. Homer*
Campbell

James R. Hooper
Crescent City

Albert J. Horn
Burlingame

Clayton W. Horn
San Francisco

Carol Horowitz
Sacramento

Laura K. Horwitch*
Los Angeles

Bonnie Rose Hough
Corte Madera

Russell A. Hough Jr.
San Francisco

Susan T. House*
Pasadena

Everett Houser
Long Beach

Joanne Hu
San Jose

Milton L. Huber
Eureka

Catherine L. Hughes
Sacramento

Dick Hughes
Los Angeles

Ed Hulett*
Sacramento

James Hulsy
Bakersfield

Roger W. Hurlbert
San Francisco

R. Bradford Huss
San Francisco

Kurt D. Huysentruyt
San Francisco

Harold A. Irish
Mendocino

J. Israel
Ann Arbor, MI

Lawrence T. Jackson
Los Angeles

John Jacobson
Los Angeles

R. Bryan Jamar
Santa Rosa

Charles W. Jamison
Santa Barbara

Nancy A. Jarvis
San Francisco

Patricia Harsh Jenkins
Los Angeles

Thomas M. Jenkins
Redwood City

Pam Jester*
Berkeley

Bjarne Johnson
Great Falls, MT

George R. Johnson
Long Beach

William H. Johnson*
Sacramento

Catherine E. Johnston
Ventura

E. Gearey Johnstone
Los Angeles

William S. Johnstone Jr.
Pasadena

Bryan Jones
Half Moon Bay

Cynthia A. Jones
San Francisco

Edgar A. Jones Jr.
Los Angeles

Janet Jones
San Francisco

Thomas L. Jones
Tuscaloosa, AL

Paul S. Jordan
San Francisco

R. R. Joslyn
Pasadena

Richard Julien Jr.
San Francisco

Marcus Kalb
Beverly Hills

Vernon Kalshan
Bakersfield

Melvin B. Kambel
Long Beach

Larry M. Kaminsky
Irvine

Douglas A. Kaplan*
Woodland

Peter Kaplan
Los Angeles

Jon M. Kasimov
Santa Monica

James R. Kaspar
Redwood City

Robert J. Kasper Jr.
San Mateo

Sandra S. Kass*
Los Angeles

Meg Katzen
Sacramento

Brian J. Kavanagh
San Francisco

Richard H. Keatinge
Los Angeles

Dennis P. Keegan
Santa Rosa

Irving Kellogg
Beverly Hills

William L. Kelly
Iselin, NJ

Helen Kemble
South Pasadena

Allen J. Kent
San Francisco

Gene B. Kent*
Los Angeles

Melvin C. Kerwin
Menlo Park

Frederick R. Keydel
Detroit, MI

A. Richard Kimbrough
Los Angeles

Robert Kingley
Los Angeles

Julia Kingsbury
Arcadia

Richard S. Kinyon*
San Francisco

Dan L. Kirby
Sioux Falls, SD

Monroe W. Kirkman
San Diego

Robert Kirkpatrick
Long Beach

Richard M. Klarin
Beverly Hills

Melodie Kleiman*
Ventura

Howard S. Klein
Los Angeles

Kenneth M. Klug*
Fresno

David W. Knapp Sr.
San Jose

H. M. Knight
San Rafael

John Knowles
Laguna Beach

Hal M. Koontz
Bakersfield

Shirley L. Kovar
San Diego

Craig A. Kramer
Ukiah

D. B. Krauter
Sacramento

Dena Burnham Kreider
San Francisco

Daniel J. Kremer
San Diego

David E. Kriesel
Los Angeles

Jim Krochka
Los Angeles

Grace M. Kubota-Ybarra
San Jose

Sheldon F. Kurtz
Iowa City, IA

Adrian Kuyper
Santa Ana

Marian E. Kysar
Glendale

Vincent E. LaRosa
Rosemead

Stanley C. Lagerlof
Los Angeles

Andrew Landay
Santa Monica

John H. Langbein
Chicago, IL

Charles J. Larkin
San Bernardino

David W. Lauer*
San Francisco

Cyril L. Lawrence
Merced

Beatrice Lawson*
Los Angeles

Herbert I. Lazerow
San Diego

Lionel B. LeBel Jr.
Santa Monica

Richard P. LeBlanc
Portland, ME

Paulette E. Leahy*
San Diego

Robert J. Leahy
Santa Rosa

David C. Lee
Oakland

Gilbert W. Lee
Monterey Park

Lucinda Lee
San Francisco

Wayne C. Lee
Colfax

Shari Leinwand
Los Angeles

Marvin E. Levin
Santa Monica

Richard B. Levitt
Beverly Hills

Joan M. Lewis
Redding

John R. Lewis
Sacramento

Frederick L. Leydorf
Los Angeles

Charles J. Liberto
Long Beach

David E. Lich*
Santa Monica

Gerald E. Lichtig
Los Angeles

Arne S. Lindgren
Los Angeles

William H. Linscott
Bangor, ME

Peter E. Lippett
San Francisco

R. L. Litherland
San Jose

David A. Livdahl
Los Angeles

Richard E. Llewellyn II
Los Angeles

David C. Long
San Francisco

Thomas S. Loo
Los Angeles

Lewis F. Lovell
Anaheim

Richard Lubetzky*
Los Angeles

Charles E. Luckhardt
San Jose

James E. Ludlum
Los Angeles

Johanna Lundy
Redondo Beach

Charles W. Luther
Fair Oaks

Florence J. Luther
Fair Oaks

Donald W. Lynch
Oceanside

LeRoy E. Lyon Jr.
Sacramento

John G. Lyons
San Francisco

Alice J. MacAllister
Cupertino

D. K. MacDonald
San Rafael

Robert D. MacFarlane
La Mesa

Jay Ross MacMahon
San Rafael

Zella Mack
Sacramento

Gary D. Macomber
Sacramento

Robert K. Maize Jr.
Santa Rosa

Kern Majors
Fresno

Terrance A. Malone
Sherman Oaks

Dorothy S. Malowney
San Diego

Grace H. Malson
Seattle, WA

Robert L. Manuele
Los Angeles

Terry Marcellus
Los Angeles

Muncie D. Marder
Los Angeles

Robert I. Marder
San Dimas

Marita K. Marshall
San Francisco

Russell Marshall
San Jose

Robert A. Martin
San Francisco

Elmer Dean Martin III
Los Angeles

Roderick P. Martinelli
San Rafael

Linda S. Martinez*
Santa Ana

Jackson H. Mason Jr.
San Jose

James M. Mattesich*
Sacramento

Susan Mattox
San Francisco

Richard C. Maxwell
Durham, NC

Martin J. May
Salinas

Eugene P. McAuliffe
San Francisco

Jeanne McBride
San Diego

Michele K. McCabe*
San Francisco

W. S. McClanahan*
Beverly Hills

Ben McClinton
San Francisco

Homer L. McCormick
Costa Mesa

Barry L. McCown
Bakersfield

Elizabeth W. McCroskey
Palo Alto

John L. McDonnell Jr.*
Oakland

Dennis S. McDougall
Chula Vista

John J. McEvoy*
San Diego

Brian McGinty
Oakland

William M. McGovern
Los Angeles

John H. McGuckin Jr.
San Francisco

Elizabeth R. McKee
Richmond

Roy McKernan
Chico

Wilbur McMinn
San Francisco

Joseph B. McMullin
Altadena

Ian D. McPhail
Santa Cruz

Scott McWhinney
Los Angeles

Michael P. Mears
Bakersfield

Peggy Jane Meeker
Yountville

George E. Meese
Sacramento

George Meier
Oakland

Henry Melby
Glendale

Randall Melby
Glendale

Anthony J. Mercant
San Jose

Greg Merrill*
Washington, DC

Rod Merrill*
Los Angeles

Valerie J. Merritt*
Los Angeles

James B. Merzon
San Luis Obispo

William Meux
Fresno

Gary S. Mikuni
Los Angeles

Barbara J. Miller
Oakland

Charlotte Miller
San Jose

Michael Patiky Miller
Palo Alto

Robert A. Mills*
San Francisco

David W. Mitchell
San Jose

Gary Mitchell*
Dana Point

James E. Mitchell
Augusta, ME

Averill Q. Mix
Los Gatos

Rita Mize
Sacramento

Robert E. Moebius
Camarillo

Timothy I. Molter
Oakland

George F. Montgomery II
San Francisco

Natalie Montgomery
Mill Valley

Toby F. Montgomery
Palo Alto

Gilbert Moody
Turlock

Linda A. Moody
Mill Valley

Christopher M. Moore
Torrance

Frank Moore
Indio

Henry T. Moore Jr.
Santa Ana

Herbert P. Moore Jr.
Orinda

Kathleen Moran
Colusa

Robert H. Morgan
San Jose

Volney F. Morin
Los Angeles

Dennis Morita
El Centro

Dorothy G. Morris
Fresno

Michael J. Morris
San Luis Obispo

Joanne Morton*
Santa Cruz

J. S. Moseley*
Pasadena

Martin J. Moshier
San Bernardino

Charles Mosse*
Del Mar

Peter L. Muhs
San Francisco

Albert Muir*
Albany

Joanne Murdock
Sacramento

Louis Naiditch
Los Angeles

John K. Nazarian
Los Angeles

David A. Nearon
Walnut Creek

Charles I. Nelson
Malibu

Clyde A. Nelson Jr.
Petaluma

Lawrence J. Nelson
San Francisco

David B. Nemer Jr.
San Francisco

Bernard Newman
Beverly Hills

Jeffrey P. Newman
San Francisco

Albert J. Nicora*
Oakland

Phillip J. Nielsen
San Jose

Henry Barron Niles
South Pasadena

L. Bruce Norman*
Los Angeles

J. Earle Norris
Los Angeles

Ann O'Connell
Sacramento

John B. O'Donnell
San Francisco

Edward O'Mara
Fremont

Charles E. Ogle
Morro Bay

Marshal A. Oldman*
Encino

James C. Opel*
Los Angeles

Donald R. Osborn
Pasadena

Paul D. Osowski
San Francisco

Robert Pacheco
Covina

Burton J. Pacioretty
San Francisco

Charles H. Packer
San Jose

Morton A. Pactor*
San Francisco

Maurine C. Padden*
Sacramento

Jerilyn Paik
Sacramento

Herbert J. Paine
San Francisco

Peter R. Palermo
Pasadena

Steven G. Pallios
Modesto

Hall Palmer
Palo Alto

Ralph V. Palmieri*
Los Angeles

Lee S. Pantell
Palo Alto

Mario G. Paolini
San Francisco

Averill C. Pasarow
Los Angeles

Robert L. Pasquinelli
San Jose

Brett F. Paulsen
Salt Lake City, UT

John Payne
Los Angeles

Elliot D. Pearl
Sacramento

Herbert D. Pearlson
Beverly Hills

Edward F. Pearson
Los Angeles

David A. Peckman
Los Angeles

Barbara Penaluna*
San Mateo

William Penaluna*
San Mateo

Robert W. Pendergrass
San Rafael

Yvonne M. Perez
Rolling Hills Estates

James H. Perkins
Fresno

Irving Perluss
Sacramento

Byron I. Pesin
Palm Springs

Carol A. Peters
Pasadena

Janice Peters
San Luis Obispo

Stephen F. Peters*
Santa Monica

Bernice A. Peterson
Santa Rosa

Bill Peterson
Sioux Falls, SD

Philip E. Peterson
Lewiston, ID

Kenneth G. Petrulis*
Santa Monica

Ruth A. Phelps
Burbank

Alan M. Phillips
Redwood City

James J. Phillips
Pleasanton

Derrich Phipps*
San Francisco

William J. Pierce
Chicago, IL

John H. Pitts
Fullerton

Gloria Pitzer*
Pasadena

William H. Plageman Jr.*
Oakland

William M. Poindexter
Los Angeles

David Pollard
Sacramento

Leonard W. Pollard II*
San Diego

William G. Polley
Sonora

Richard Polse
Santa Cruz

Victor E. Portanova
Beverly Hills

Andrew G. Potter
Newport Beach

Clyde H. Potter Jr.
Van Nuys

Nancy L. Powers
San Francisco

Ronald K. Preston
Sonoma

G. Sinclair Price*
San Diego

Gary Proctor*
Santa Ana

James E. Prosser
Sacramento

William C. Pultz
San Marcos

Keith A. Pursel
Los Angeles

Verne H. Pynn
Concord

Kathleen Quenneville
San Francisco

James V. Quillinan*
Mountain View

Jerome A. Rabow
Los Angeles

Janet A. Rae*
Manhattan Beach

Matthew S. Rae Jr.*
Los Angeles

David O. Rahn
Oxnard

Jack A. Rameson III
Woodland Hills

Mary Randolph
Berkeley

Mark S. Rapaport*
Los Angeles

Leslie D. Rasmussen
Los Angeles

Richard D. Ratkovic*
Santa Monica

Barbara Ratner*
Santa Ana Heights

Ruth E. Ratzlaff
Fresno

Carol A. Reichstetter
Los Angeles

Kathryn E. Reid
Baton Rouge, LA

Victor M. Reid III
San Jose

Edward Reidy
San Francisco

Irving Reifman*
Los Angeles

Allen S. Remes
Upland

Don Reynolds
Thousand Oaks

R. Blair Reynolds*
San Francisco

Cecilia B. Rhoda
Houlton, ME

Velma M. Rhodes
Santa Monica

George B. Rice
Campbell

Susan Rice
San Francisco

Neville Rich Jr.*
San Francisco

Michael Richards
Washington, DC

Joan Richardson
San Francisco

Sherry E. Ridgley
Los Angeles

Ann P. Rigoni
San Diego

JoAnne Ringstrom
Merced

Robert J. Riordan
San Mateo

Kenneth M. Robbins
Merced

Kathleen O'Connor Robertson
Pasadena

D. R. Robinson
Auburn

Paul W. Robinson
Albuquerque, NM

Robert C. Robinson
Portland, ME

Stephen B. Robinson Jr.
Los Angeles

James Rodriguez
Santa Clara

Don Rogers
Tulare

James F. Rogers
Los Angeles

Jim Rogers
San Jose

John T. Rogers Jr.
Los Angeles

Margaret R. Roisman
Oakland

Dorothy E. Rolling
San Rafael

Blaine T. Romney
Santa Paula

Elizabeth M. Rose
Sacramento

Walter K. Rosely
Burbank

Walter K. Rosen
Burbank

Robert B. Rosenstein
Los Angeles

Amy Rosewarne
San Francisco

Paul H. Roskoph
Palo Alto

Bruce S. Ross
Los Angeles

Phyllis M. Ross
San Francisco

Sterling L. Ross Jr.*
Mill Valley

Leslie Steven Rothenberg*
Los Angeles

Robert G. Rove
Minneapolis, MN

Gary T. Rowse
San Francisco

Linda E. Roye
Sacramento

James M. Ruddick
Marysville

Timothy L. Ruschin
San Jose

Ernest Rusconi
Morgan Hill

Albert Russell
San Jose

Ron Russo
Sacramento

Robert S. Sage
Woodland Hills

Gerald Salzman
Los Angeles

Warren L. Sanborn
Long Beach

Beverly R. Sands
Santa Monica

Jerome Sapiro*
San Francisco

Jerome Sapiro Jr.*
San Francisco

Philip V. Sarkisian
Hayward

James P. Saunders Jr.
Hobbs, NM

Philip M. Savage III
San Bernardino

James R. Scannell*
San Francisco

Judith A. Schindler
Oakland

Robert A. Schlesinger
Palm Springs

Joseph Schmedding
San Jose

Ernest W. Schmidt
Palo Alto

William V. Schmidt*
Newport Beach

Judith A. Schneider
Palo Alto

Kim T. Schoknecht
San Francisco

John W. Schooling
Chico

Gerald F. Schulte
Riverside

Charles G. Schulz
Palo Alto

Herbert E. Schwartz
Los Angeles

James R. Schwartz*
San Francisco

Robert J. Scolnik
San Francisco

Gerald L. Scott*
San Jose

Milton Berry Scott
Walnut Creek

Wareham Seaman
Sacramento

Jo Anne Seay
Fresno

John M. Segal
Los Angeles

Richard Seim
San Jose

Howard Serbin*
Santa Ana

Vincent C. Sevely
Palo Alto

Charles E. Sewing
San Francisco

Angela Shanahan
Los Angeles

Carol N. Shapiro
San Jose

Sylvia Shapiro
San Rafael

Nancy A. Shaw
San Marino

Lisa Shepard
San Jose

Dunham B. Sherer
San Jose

Jane C. Sherman
Lafayette

Stephen M. Shirley
Pomona

Sussan H. Shore
Los Angeles

Lon D. Showley
San Diego

Myron Siedorf
Los Angeles

Neil Siegel
Oakland

Robert E. Siemer
Long Beach

Melvyn A. Silk
Sacramento

Linda Silveria
San Jose

Irene Silverman*
Los Angeles

Judy K. Simmans
Inverness

James V. Simoni
Gilroy

Bruce D. Sires
Beverly Hills

Andrea Slade*
Los Angeles

Sheila J. Slaughter
Los Angeles

James T. Slingsby
San Diego

Warren Slocum
Redwood City

Harold S. Small
San Diego

Steven A. Small
Redding

Allan F. Smith
Ann Arbor, MI

Carleton M. Smith
Santa Rosa

Ella M. Smith
Santa Ana

Elwayne E. Smith
Downey

Gilbert M. W. Smith
Pasadena

James A. Smith
Redlands

June Smith
Oakland

Michael D. Smith*
Los Angeles

Sherry Smith
Berkeley

Damian Barry Smyth
San Francisco

Dent E. Snider*
Santa Cruz

W. David Snook*
Davis

Richard N. Snyder
San Francisco

Pamela M. Soderbeck
Los Angeles

Steven A. Sokol
Los Angeles

C. W. H. Solinsky
Sacramento

Matthew F. Spaulding
Los Angeles

Andrew M. Spears
Palo Alto

Norman Spellberg
Martinez

David H. Spencer
Los Altos

Randy Spiro
Los Angeles

Harley J. Spitler*
San Francisco

Fred A. Sprague
San Jose

Clare H. Springs
San Francisco

Richard L. Stack*
Los Angeles

Thomas R. Stanwood
Palo Alto

Anne Steele
San Bruno

Bruce J. Steele
Los Angeles

Robert A. Stein
Minneapolis, MN

Charles G. Stephenson
San Francisco

George Stephenson
San Pedro

Darrell Stevens
Oroville

Nancy J. Stevenson
Arcadia

James J. Stewart*
Beverly Hills

James W. Stewart
San Jose

Robin Leslie Stewart
Sacramento

Thomas N. Stewart Jr.
Walnut Creek

Norman S. Stimmel
Oakland

G. L. Stromme
San Francisco

George A. Strong
Santa Clara

Gerald W. Stutsman
Fresno

Peter Sugar
Sacramento

F. C. Sullivan
Memphis, TN

Lucinda Surber*
Menlo Park

Thomas Suttner
Arcadia

Don Swanson
San Jose

Frank M. Swirles
Rancho Santa Fe

Theresa Taken*
San Francisco

Harold C. Tallmadge
Santa Barbara

Grace Tam
Oakland

Lynn K. Tamiyasu
Palo Alto

Thomas C. Taylor Jr.
Santa Rosa

Vincent A. Telling*
Los Angeles

Robert E. Temmerman Jr.
Campbell

Cheryl Templeton
Van Nuys

T. L. Thatcher
Sacramento

Viola J. Thomas
San Bernardino

Dorothy H. Thomson
Woodland

Shelley B. Thomson*
Los Angeles

Tom Thorner
San Rafael

Thomas R. Thurmond
Vacaville

Joseph E. Tinney
San Francisco

Haskell Titchell
San Francisco

Henry C. Todd
San Francisco

John Sanford Todd
Lakewood

Linda Tomer
Eureka

Melinda J. Tooch
Los Angeles

Gordon W. Treharne*
Los Angeles

Martin F. Triano
San Francisco

Charles A. Triay
Oakland

E. Kay Trout*
Pasadena

K. E. Trout
Arcadia

Thomas A. Tutton
Bakersfield

Kenneth C. Twisselman II
Bakersfield

Wanda Underhill
San Francisco

Richard L. Unis
Portland, OR

Lauren Upson*
San Francisco

Alex S. Urbach
Los Angeles

W. E. Utzinger
Santa Rosa

W. John Valentine*
Santa Ana

Milton G. Valera
Woodland Hills

Ronald A. VandenBerg
Palo Alto

Myra Van Norman
Sacramento

Harlan K. Veal
Redwood City

Michael V. Vollmer*
Irvine

Elinor J. Votaw
Newport Beach

Robert A. Waddell
Torrance

James R. Wade
Denver, CO

Lawrence W. Waggoner
Ann Arbor, MI

Belan M. Wagner
Pacific Palisades

Gary V. Waits*
Pixley

Norma J. Waits*
Pixley

Keith S. Walker
Pomona

Austen D. Warburton
Santa Clara

Edmond C. Ward
San Rafael

Judith A. Ward
Fresno

Ralph Warner
Berkeley

Edward J. Watson
San Francisco

David D. Watts
Los Angeles

Harold W. Wax
Los Angeles

Lance M. Weagant
Los Angeles

Dorothy E. Webb
Los Gatos

Henry Wein
El Centro

Harold Weinstock
Los Angeles

Carol Weisner*
San Francisco

Stevens Weller Jr.
Los Angeles

Richard V. Wellman*
Athens, GA

H. Neal Wells III*
Los Angeles

Robert D. Wenzel
San Jose

Barbara M. Wertheimer
San Francisco

Ronald S. Westphal
San Jose

Michael Whalen*
Los Angeles

John Whatley
Pasadena

Mercedes Z. Wheeler
Brawley

J. W. Whelan
San Francisco

Anthony G. White
San Francisco

William A. White
Sacramento

Charles H. Whitebread
Los Angeles

Ed Whitney
San Diego

Lawrence Widdis*
Los Angeles

Stanley Wieg*
Sacramento

Lewis R. Wiener
San Francisco

Richard P. Wilcoxon
Sacramento

Robert R. Willard
Ventura

James A. Willett*
Sacramento

Arnold F. Williams
Fresno

John V. Willoughby
Campbell

Robert D. Wilner
Los Angeles

Beverly Wilson
Placerville

Melvin H. Wilson
Pasadena

William P. Wilson
Downey

Daniel Wingerd
Redlands

Richard C. Wolcott
Sacramento

James Wolf
Los Angeles

Roger D. Wolfertz
Sacramento

Norma J. Wollesen
Modesto

William J. Wood
Sacramento

Allan Woodcock Jr.
Bangor, ME

Daniel Woods
Newbury Park

Gilbert Woolway
Los Angeles

Robert F. Work*
Los Angeles

Jean C. Wren
Torrance

Janet L. Wright
Fresno

Timothy C. Wright
Menlo Park

William M. Wright
San Francisco

LeVone A. Yardum*
Los Angeles

Shirley C. Yawitz*
San Francisco

Marilyn A. Young
San Francisco

Stanley C. Young
Quincy

Diane C. Yu
Oakland

Raymond Lee Zager
Los Angeles

Robert Zeilenga
Arroyo Grande

Stephen L Zetterberg
Claremont

Alvin Ziegler
Oakland

Joseph Ziemann
Bakersfield

Stuart D. Zimring
North Hollywood

Frank S. Zolin
Los Angeles

RECOMMENDATION

Page

INTRODUCTION 1034

THE NEW PROBATE CODE 1035

Matters That Concern More Than One Division of the Code 1035
Compensation of personal representative and estate attorney 1035
General definitions made applicable to entire code 1036
General notice provisions 1036
Protection of third persons acting in good faith 1036
Personal liability of fiduciary who signs instrument or contract 1037
Immunity of county recorder 1038

Division 1. Preliminary Provisions and Definitions 1038

Division 2. General Provisions 1038
Distribution among heirs or beneficiaries 1038
Effect of felonious and intentional killing 1039

Division 3. General Provisions of a Procedural Nature 1039

Division 4. Guardianship, Conservatorship, and Other Protective Proceedings 1039
Powers of nominated guardian 1039
Power of attorney for health care 1039
Investments authorized without need to obtain court order 1040
Disposition of small estate upon death of ward or conservatee 1040
Conforming guardianship and conservatorship provisions to decedents' estates provisions 1041
Transitional provisions for guardianship-conservatorship law of 1981 1044
Notice in proceeding for particular community property transaction 1044

Division 5. Nonprobate Transfers 1045

Division 6. Wills and Intestate Succession 1045
Petition to set apart probate homestead 1045
California statutory will 1045
Class gift to "heirs," "next of kin," "relatives," or the like 1046
Parent-child relationship in intestate succession 1046

Division 7. Administration of Estates of Decedents 1046
Statement of duties and liabilities of personal representative 1046
Waiver of bond for special administrator 1047
Claims period 1047
Proceeding for transfer of property claimed to belong to decedent or another person 1047
Cotenant's consent to sale or partition 1047

Broker's commission on sale of estate property 1048
Appraisal of property subject to option 1048
Statutory form for waiver of notice of proposed action 1049
Informal distribution 1049

Division 8. Disposition of Estate Without Administration 1049
Authority of trustee or attorney in fact 1049
Affidavit procedure for real property of small value 1050
Restitution if estate proceeding commenced 1050

Division 9. Trust Law 1050

Division 10. Proration of Taxes 1051

Division 11. Construction of Wills, Trusts, and Other Instruments 1051

INTRODUCTION

In 1980, the Legislature directed the Law Revision Commission to make a study to determine whether "the California Probate Code should be revised, including but not limited to whether California should adopt, in whole or in part, the Uniform Probate Code."[1] In response to this directive, the Commission undertook a systematic review of the entire Probate Code. The Commission has completed this review and has submitted recommendations for revision of each portion of the Probate Code.[2] As a result of these recommendations, the entire Probate Code has been revised except for the portion relating to compensation of the probate estate attorney and the personal representative.[3] The recommended legislation on this remaining portion of the code will be acted upon by the Legislature in 1990.[4]

---

1. 1980 Cal. Stat. res. ch. 37.

2. The previously submitted Commission recommendations that remain relevant to each portion of the new Probate Code are listed in the Comment to that portion of the new code. In some cases, a previously submitted recommendation relevant to a particular section is listed in the Comment to that section. For the Comments to the new code, see this publication, infra.

3. See *Recommendations Relating to Probate Law (Hiring and Paying Attorneys, Advisors, and Others; Compensation of Personal Representative)*, 20 Cal. L. Revision Comm'n Reports 31 (1990).

4. See discussion, infra, under "Matters That Concern More Than One Division of the Code."

THE NEW PROBATE CODE

This recommendation proposes the enactment of a new Probate Code to replace the existing Probate Code.[5] The new code will continue the sections of the existing code, without changing section numbers, but will omit obsolete material and make numerous technical, clarifying, conforming, and minor substantive revisions in the existing provisions.

Like the existing code, the new code is divided into 11 divisions. In the following discussion, consideration is first given to matters that concern more than one division of the code. Then follows a discussion of the significant revisions the new code would make in each division of the existing code. Minor and technical revisions are not noted here; for information concerning these revisions, reference should be made to the Comments set out in this publication.

Matters That Concern More Than One Division of the Code

Compensation of personal representative and estate attorney

The new code does not continue the existing provisions relating to the compensation of the probate estate attorney and personal representative (Sections 900-911). Commission-recommended provisions on this matter will be presented for legislative consideration in 1990 in a bill separate from the bill proposing the enactment of the new code. The Comments set out in this publication are written on the assumption that those provisions will be enacted. However, the bill proposing enactment of the new code will be amended to conform to the

---

5. Assembly Bill 759 was introduced at the 1989 legislative session by Assembly Member Friedman to effectuate this recommendation. The bill was amended in the Assembly May 30, 1989, and the Commission has prepared a second set of amendments to the bill to be made early in 1990. This recommendation explains the bill as it will exist after the second set of amendments is made.

The Commission also plans to submit additional recommendations relating to probate law to deal with matters not previously studied or to deal with any problems disclosed by the experience under provisions enacted upon Commission recommendation.

compensation legislation actually enacted in 1990. The Comments set out in this publication also will be revised to conform to the compensation legislation enacted in 1990.[6] Accordingly, any policy issues concerning compensation will be presented by separate legislation, not by the bill proposing the enactment of the new code.

General definitions made applicable to entire code

The new code makes the general definitions (Sections 20-88) apply to the entire code. Under the existing code, the general definitions do not apply to Division 4 (commencing with Section 1400) (guardianships and conservatorships).[7]

General notice provisions

The new code makes the general notice provisions (Sections 1200-1265) apply to the entire code unless otherwise provided.[8] Under the existing code, the general notice provisions do not apply to Division 4 (commencing with Section 1400) (guardianships and conservatorships) or Division 9 (commencing with Section 15000) (Trust Law), except that some specifically-listed provisions do have general application under the existing code.[9] The expansion of the scope of the general notice provisions permits the omission of a number of provisions in Divisions 4 and 9 of the existing code that duplicate general notice provisions.

Protection of third persons acting in good faith

Various provisions of the existing code apply inconsistent standards to the protection of third persons who rely on

---

6. The separate bill to effectuate the Commission's recommendations concerning compensation of the probate estate attorney and personal representative also contains conforming revisions of numerous sections scattered throughout the code. The bill proposing the new code includes these conforming revisions. The bill and the Comments will be revised to conform to the substance of the attorney and personal representative compensation provisions (including the conforming revisions) as enacted.

7. See Prob. Code § 20.

8. See Section 1200 of the new code. See also Section 17100 (Trust Law) of the new code.

9. See Prob. Code § 1200.

ostensible authority or title in good faith and for valuable consideration. While a number of provisions broadly protect a third person who acts in good faith,[10] other statutes are limited to a good faith "purchaser,"[11] or to a good faith "encumbrancer"[12] or "lessee,"[13] or to a miscellaneous combination of persons acting in good faith and for value.[14]

There is no reason to distinguish among the various persons protected under most of these statutes. Many of the statutes are unduly narrow in their coverage, and the variances in wording may, by implication, cause them to be construed more narrowly still.[15] The existing references to a "third person acting in good faith and for valuable consideration" are both better and more prevalent in the code than the other references, and the new code uses this standard throughout.[16]

Personal liability of fiduciary who signs instrument or contract

Section 18000 of the existing code provides that a trustee is not personally liable on a contract properly entered into in the trustee's fiduciary capacity in the course of administration of the trust unless the trustee fails to reveal the trustee's

---

10. Prob. Code §§ 2545 (guardianship and conservatorship sales), 8272 (revocation of probate), 18100-18102 (third persons dealing with trustee).

11. Prob. Code §§ 11750 (distribution of property), 18103 (effect on purchaser of omission of trust from grant of real property).

12. Prob. Code §§ 1875 (legal capacity of conservatee), 3074 (management or disposition of community property where spouse lacks legal capacity), 18104 (effect on real property transactions where beneficiary undisclosed).

13. Prob. Code § 13106.5 (affidavit procedure for collection or transfer of personal property of estate of small value).

14. Prob. Code §§ 13106.5 (affidavit procedure for collection or transfer of personal property of estate of small value), 13203 (affidavit procedure for real property of estate of small value).

15. It is not clear, for example, whether protection of an "encumbrancer" extends to a lessee. Civil Code Section 1114 defines "encumbrances" to include taxes, assessments, and all liens on real property. Cases have applied the term "encumbrance" to covenants, restrictions, reservations of right-of-way, easements, leases, and deeds of trust, among other interests. 1 A. Bowman, Ogden's Revised California Real Property Law §§ 3.4, 11.20 (1974).

16. See Sections 1875, 3074, 11750, 13106.5, 13203, 18103, and 18104 of the new code.

representative capacity or identify the trust in the contract.[17] The new code adds comparable general provisions for personal representatives[18] and guardians and conservators.[19] The new provisions cover contracts and other instruments (such as notes) signed by personal representatives, guardians, and conservators.

Immunity of county recorder

Section 2901(d)(2) of the existing code gives the county recorder immunity for recording a written certification of the public guardian, and Section 7603(d)(2) of the existing code gives a similar immunity in the case of a certification of the public administrator. The county recorder is not as a general principle subject to liability for recording any instrument authorized or required by law to be recorded. Rather, the opposite is true: The county recorder is liable for failing to record as required.[20] The new code omits the county recorder immunity provision from Sections 2901 and 7603. Not only is the provision unnecessary, but it may create an implication that the county recorder may be liable for recording another type of instrument absent an express provision for immunity.

Division 1. Preliminary Provisions and Definitions

The new code continues Division 1 of the existing code without substantive change. However, the general definitions are made applicable to the entire code.

Division 2. General Provisions

Distribution among heirs or beneficiaries

The new code expands the scope of the provisions relating to distribution among heirs or beneficiaries (Sections 240-

17. This rule applies unless otherwise provided in the contract or in the Trust Law. See Prob. Code § 18000.

18. See Section 9606 of the new code. The new provision generalizes a provision found in Section 9805(b) of the existing code.

19. See Section 2110 of the new code. The new provision generalizes a provision found in Section 2551(d) of the existing code.

20. See, e.g., Gov't Code §§ 27201, 27203.

247) to include not only distribution under wills and trusts but also distribution under other instruments. This expansion to cover "other instruments" makes clear, for example, that the distribution provisions apply to an instrument exercising a power of appointment. The addition gives the person drafting the "other instrument" the option of selecting among the distribution systems available under Sections 240-247.

Effect of felonious and intentional killing

Under existing law, the person who feloniously and intentionally kills the testator and who is nominated in the testator's will as executor, trustee, or guardian is treated as if he or she had predeceased the testator.[21] The new code extends this provision to include the nomination of a conservator.

Division 3. General Provisions of a Procedural Nature

The new code makes clear that the court may, for good cause, make an order dispensing with notice to a person who has requested special notice in a proceeding for the administration of a decedent's estate.[22]

Division 4. Guardianship, Conservatorship, and Other Protective Proceedings

Powers of nominated guardian

Unless the court for good cause determines otherwise, a guardian nominated by will is granted the powers specified in the will.[23] The new code extends this provision to cover any instrument by which a nomination may be made.

Power of attorney for health care

A provision is added in the new code to make clear that the provisions in the code relating to the health care of a

---

21. Prob. Code § 250(b)(3).
22. See Section 1220(c) of the new code.
23. See Prob. Code § 2108.

conservatee are subject to a valid and effective power of attorney for health care.[24]

Investments authorized without need to obtain court order

The new code expands the types of investments that may be made without a court order to include direct obligations of the State of California maturing not later than five years from the date of making the investment.[25]

Disposition of small estate upon death of ward or conservatee

The existing code permits the guardian or conservator to petition for an order authorizing the guardian or conservator to liquidate the estate if (1) the ward or conservatee dies while the guardianship or conservatorship proceeding is pending, (2) the debts and expenses of the estate cannot be paid in full, and (3) the estate value does not exceed $10,000.[26] If the order is granted, the guardian or conservator may liquidate the estate without the need to probate the estate.[27]

The $10,000 limit is obsolete, since Probate Code Section 13100 now authorizes collection or transfer of a decedent's estate without the need for probate if the estate value does not

---

24. See Section 2356(e)(2) of the new code. A comparable provision is added to Section 3211 of the new code, a section that relates to authorization of medical treatment for an adult without a conservator.

25. See Section 2574(a)(1) of the new code. Section 2574 is consistent with the scheme of Section 2544 of the new code which permits sale of listed securities and certain over-the-counter securities without court authorization, but departs from comparable provisions relating to probate estates which require a court order for sale of securities (Section 10200).

26. Prob. Code § 2631. The guardian or conservator may petition for the order even though there is a will of the decedent in existence if the will does not appoint an executor or if the named executor refuses to act. If the order is made, the guardian or conservator may withdraw money on deposit in financial institutions, collect insurance and other property of the ward or conservatee, and sell personal property of the ward or conservatee, and the person having possession or control must pay or deliver the money or property to the guardian or conservator. Id.

27. Prob. Code § 2631. Section 2631(d) provides that the property remaining after payment of expenses may be transferred, without the need for probate, to the successors of the decedent pursuant to the general provisions permitting disposition without administration (Probate Code Sections 13000-13660).

exceed $60,000.[28] The new code substitutes a reference to Section 13100 for the $10,000 limit found in the existing code for summary liquidation of a deceased ward's or conservatee's estate, and permits the guardian or conservator to petition for a court order to liquidate the estate whether or not the debts and expenses can be paid in full.[29]

Conforming guardianship and conservatorship provisions to decedents' estates provisions

The new code makes a number of revisions to conform the provisions applicable to guardians and conservators to those applicable to decedents' estates, including the following:

(1) Provisions are added to the new code to specify the measure of the liability for damages and interest of a guardian or conservator who breaches a fiduciary duty.[30]

(2) The new code increases the dollar amount of priority wage claims, making a total of $2,000 that is given priority.[31]

(3) The new code adds a provision that permits a trust company to maintain a noninterest-bearing checking account in a department of the corporation or association of which the trust company is a party.[32]

28. Section 13100 is the limit for use of the affidavit procedure for collection or transfer of personal property. For a similar limitation, see Prob. Code § 13154 (court order determining succession to real property). See also Prob. Code § 13050 (property excluded in determining property or estate of decedent or its value).

29. See Section 2631 of the new code. A similar revision was made in 1987 in the provision authorizing the public administrator, with approval of the court, to dispose of the estate of a decedent without administration. See former Prob. Code § 1143 (as amended by Cal. Stat. 1987 ch. 53, § 1) (a reference to Section 13100 was substituted in place of a $20,000 limit). Former Prob. Code § 1143 was repealed by 1988 Cal. Stat. ch. 1199, § 57.5, the section being superseded by existing Prob. Code § 7660 et seq.

30. See Sections 2401.3, 2401.5, and 2401.7 of the new code. Section 2401.3 is comparable to Sections 9601 (decedents' estates) and 16440 (trusts). Section 2401.5 is comparable to Sections 9602 (decedents' estates) and 16441 (trusts). Section 2401.7 is comparable to Sections 9603 (decedents' estates) and 16442 (trusts).

31. See Section 2431 of the new code. This increase from a total of $1,200 to a total of $2,000 conforms the amount of the priority wage claims for work or services rendered for a ward or conservatee (Section 2431) to the amount given priority as a wage claim for decedents' estates. See Sections 11402, 11420, and 11421 (decedents' estates). The balance of the wage claim not given priority is payable with other debts. See Section 2430(a)(1).

32. See Section 2453.5(b) of the new code, which is comparable to Section 9705(b) (decedents' estates). Cf. Section 16225(e) (trusts).

(4) The new code limits the authority of a guardian or conservator to accept a deed to property that is subject to a mortgage or deed of trust in lieu of foreclosure of the mortgage or sale under the deed of trust. The new code permits the court to authorize the transaction only if the advantage to the estate of accepting the deed is shown by clear and convincing evidence.[33]

(5) The new code adds a requirement that court approval must be obtained for (i) a compromise or settlement of a claim by the ward or conservatee against the attorney for the guardian or conservator or (ii) an extension, renewal, or modification of the terms of a debt or similar obligation of the attorney for the guardian or conservator owing to or running in favor of the ward or conservatee or the estate.[34]

(6) The new code makes clear that, unless another person is appointed for that purpose, the guardian or conservator may defend an action or proceeding brought against the guardian or conservator.[35]

(7) The new code adds to the section relating to borrowing money to refinance, improve, or repair property a new provision that no omission, error, or irregularity in the proceedings shall impair or invalidate the proceedings.[36]

(8) The existing code provision relating to examination concerning assets of an estate has been restated in the new code using language drawn from the comparable provision relating to decedents' estates.[37]

---

33. See Section 2464(c) of the new code, which is comparable to Section 9850(c) (decedents' estates).

34. See Section 2503 of the new code. The extension to cover transactions with the attorney for the guardian or conservator makes the coverage of Section 2503 consistent with the coverage of Section 9834 (decedents' estates).

35. See Section 2462(b) of the new code. This revision makes Section 2462 consistent with Section 9820, the comparable provision relating to decedents' estates.

36. See Section 2552(c) of the new code. This addition is drawn from subdivision (c) of Section 9806, the comparable provision relating to decedents' estates.

37. See Section 2616 of the new code, which draws on the language used in Section 8870 (decedents' estates).

(9) The new code restates the existing code provision relating to the account of a dead, incapacitated, or absconding guardian or conservator using language drawn from the comparable existing code provision relating to personal representatives.[38]

(10) The new code adds a provision that a guardian or conservator may be removed from office if found in contempt for disobeying an order of the court.[39]

(11) The new code expands the types of securities that may be sold without court order to include over-the-counter national market system securities.[40]

(12) The new code adds a provision for compelling an account by a guardian or conservator.[41]

(13) The new code permits a request for special notice of any petition filed in the guardianship or conservatorship proceeding.[42] This replaces the detailed list in the existing code of the various petitions of which special notice may be requested.[43]

(14) The new code restates the procedure for complying with a request for special notice.[44] The new code makes clear that the court may, for good cause, make an order dispensing with notice to a person who has requested special notice.[45]

---

38. See Section 2632 of the new code, which uses language drawn from Section 10953 (decedents' estates).

39. See Section 2655 of the new code, a provision drawn from Section 8505 (decedents' estates).

40. See Section 2544(a)(2) of the new code. In addition, Section 2544 of the new code does not continue the requirement that securities be sold on an established stock or bond exchange "in the United States" in order to avoid the need for a court order authorizing the sale. Compare Section 10200(e)(2),(3) (decedents' estates).

41. See Section 2629 of the new code, which is drawn from Sections 11050-11052 (decedents' estates).

42. See Section 2700 of the new code. This revision makes Section 2700 consistent with Section 1250 (decedents' estates).

43. See Prob. Code § 2700.

44. See Section 2702 of the new code, which uses language drawn from Section 1252, the comparable provision relating to decedents' estates.

45. See Section 1460(e) of the new code, which is comparable to Section 1220(c) of the new code (general notice provision).

Transitional provisions for guardianship-conservatorship law of 1981

The Guardianship-Conservatorship Law became operative on January 1, 1981.[46] Because the new law made significant substantive and procedural changes, elaborate transitional provisions were also provided.[47] Most of the transitional provisions no longer serve a function and are not continued in the new code. The general transitional provisions for the entire Probate Code cover the transitional problems created by the enactment of the new code.[48]

Notice in proceeding for particular community property transaction

The existing code includes a procedure that permits a competent spouse to obtain court authorization of a proposed community property transaction.[49] Notice of the time and place of hearing and a copy of the petition must be sent to adult relatives within the second degree of the spouse who lacks legal capacity.[50] The petition must set forth the terms and conditions of the proposed transaction and a description and the estimated value of the property.[51]

The new code eliminates the requirement that a copy of the petition be sent with the notice of hearing.[52] This is consistent with the general practice in probate proceedings of not serving a copy of the petition with the notice of hearing on the petition.[53] The new code continues the existing requirement

---

46. 1979 Cal. Stat. ch. 726, § 4.
47. Prob. Code §§ 1480-1491.
48. See Prob. Code §§ 2, 3.
49. Prob. Code §§ 3100-3154.
50. Prob. Code §§ 3121, 3131.
51. Prob. Code § 3121.
52. See Section 3131 of the new code.
53. Prob. Code § 1220. A requirement that a copy of the petition be served with the notice of hearing in case of a petition by a surviving spouse for a court order determining or confirming community property was eliminated by legislation enacted in 1986. See Prob. Code § 13655 (added by 1986 Cal. Stat. ch. 783, § 24), superseding former Prob. Code § 653 (repealed by 1986 Cal. Stat. ch. 783, § 9).

that notice be given of the time and place of hearing, including a description of the general nature of the matter to be heard,[54] but does not require sending a copy of the petition, thus helping preserve the family's privacy.[55] A family member who wants the details of the transaction may refer to the petition in the court file.[56]

Division 5. Nonprobate Transfers

Section 160 (nonprobate transfer provisions in written instruments) of the existing code is renumbered as Section 5000 and continued in Division 5 of the new code with some clarifying, nonsubstantive revisions.

Division 6. Wills and Intestate Succession

Petition to set apart probate homestead

The new code adds a requirement that notice of the hearing on a petition to set apart a probate homestead be given to each known heir or devisee whose interest in the estate would be affected by the petition.[57]

California statutory will

The new code adds language to Sections 6243, 6245, and 6246 that provides for the distribution of the residuary estate according to the laws relating to intestate succession "of property not acquired from a predeceased spouse."[58]

---

54. See Prob. Code § 1211.

55. The competent spouse often objects to being required to send a copy of the petition to his or her in-laws, thus divulging the details of family finances and property. See letter from Catherine L. Hughes, Legal Center for the Elderly and Disabled (Sacramento), to John H. DeMoully (February 1, 1989) on file in office of California Law Revision Commission.

56. See Judicial Council Form DE-120, Notice of Hearing (Probate) (Rev. July 1, 1989). This form includes the following statement: "You may refer to the filed documents for further particulars. *(All of the case documents filed with the court are available for examination in the case file kept by the court clerk.)* "[Emphasis in original].

57. See Section 6525 of the new code.

58. This addition restores the substance of the language found in the provisions when they were originally enacted in 1982. Sections 6243, 6245, and 6246 were originally enacted as Probate Code Sections 56.10, 56.12, and 56.13 (enacted by 1982 Cal. Stat. ch. 1401, § 1; repealed by 1983 Cal. Stat. ch. 842, §18). The restored language was deleted

Class gift to "heirs," "next of kin," "relatives," or the like

The new code adds language to Section 6151 that a class gift described in that section is to take effect according to the California statutes of intestate succession "of property not acquired from a predeceased spouse." This excludes the application of the in-law inheritance statute (Section 6402.5) to a devise covered by Section 6151.

Parent-child relationship in intestate succession

Sections 6408 and 6408.5 of the existing code specify when an adopted person inherits from or through the person's natural parents, and vice versa. These sections are complicated and their interrelationship can be confusing.[59] The new code consolidates the two sections into one section, without changing the substance of the law. This will make the law clearer and easier to use.

Division 7. Administration of Estates of Decedents

Statement of duties and liabilities of personal representative

The new code makes two revisions in the requirement of the existing code that the personal representative (other than a trust company) file an acknowledgment of receipt of a statement of the duties and liabilities of the office:[60]

(1) The new code exempts the public administrator from the requirement of filing an acknowledgment of receipt of the statement of duties and liabilities. Trust companies are already exempted from this requirement because of their expertise as personal representatives. Public administrators have similar expertise, and to require them to file the

---

as a conforming revision to a Commission recommendation proposing the repeal of another provision (Section 6402.5) that was not enacted. See *Tentative Recommendation Relating to Wills and Intestate Succession*, 16 Cal. L. Revision Comm'n Reports 2301, 2335-38 (1982). To preserve the prior law, the new code restores the deleted language in the sections carried over into the new code.

59. Section 6408 appears to be a complete statement of the law, while Section 6408.5 modifies the application of Section 6408 by a "notwithstanding" clause.

60. See Section 8404 of the new code.

acknowledgment of receipt of the statement merely creates unnecessary paperwork.

(2) The new code omits the statutory statement of the content of the statement because the statutory statement has been superseded by a form adopted by the Judicial Council.[61]

Waiver of bond for special administrator

The new code adds a provision that permits all the beneficiaries to waive the bond of a special administrator.[62]

Claims period

The new code adds a provision that makes clear that a reference in another statute to the time for filing claims means a time that expires four months after the date letters are first issued to a general personal representative.[63]

Proceeding for transfer of property claimed to belong to decedent or another person

The new code adds a provision that the court cannot shorten the 30-day notice of hearing on a petition in a proceeding for transfer of property claimed to belong to the decedent or another person.[64]

Cotenant's consent to sale or partition

The new code adds a provision to cover the situation where property in the estate to be sold is an undivided interest in a cotenancy. The new provision permits cotenants to file in the estate proceeding written consent to have their interests sold in the estate sale.[65]

---

61. See Judicial Council Form DE-147, Duties and Liabilities of Personal Representative (July 1, 1989).

62. See Section 8543(b) of the new code. This addition conforms Section 8543 to Section 8481 (waiver of bond of personal representative). Notwithstanding waiver of bond in the will or by all the beneficiaries, the court, on petition of an interested person or on its own motion, may for good cause require that a bond be given, either before or after issuance of letters. See Section 8481(b). The new code makes a conforming revision in Section 8545(b).

63. See Section 9100(b) of the new code.

64. See Section 9861(c) of the new code.

65. See Section 10006 of the new code. The new provision is designed to facilitate estate sales of the decedent's interest in a tenancy in common. The provision is consistent with

Broker's commission on sale of estate property

The new code adds a provision to deal with the situation where the personal representative makes an exclusive listing contract with a broker to sell estate property, but the contract provides that no commission is payable to the broker if sale is confirmed to a particular purchaser named in the contract.[66] Guidance is needed in this situation so that the parties to sales of estate property can plan their conduct rationally and disputes that may arise concerning entitlement to compensation may be resolved.

Under the new code, where a sale is made to a bidder named in the contract between the personal representative and the exclusive listing broker, the new code provides that the commissions due any brokers involved are to be computed under the normal rules,[67] except that the commission that would be payable to the broker holding the contract is not paid. Thus, the estate gets the benefit of the provision excluding compensation to the listing broker where a sale is made to the purchaser named in the contract.[68]

Appraisal of property subject to option

Section 9962 of the existing code requires an option to sell real property in the estate to be for at least 90 percent of the appraised value of the property, based on a probate referee's appraisal. The section fails to recognize that appraisal by a probate referee may have been waived under Section 8903 and the property appraised by another person. This situation is recognized in Section 10309(c), the general provision

---

existing practice. See 1 California Decedent Estate Practice § 6.19 (Cal. Cont. Ed. Bar rev. ed. Feb. 1989) (probate court may by stipulation consider any matter in connection with and in aid of proceeding). Subdivision (b) of Section 2543 of the new code will make the new provision apply to sales by guardians or conservators.

66. See Section 10162.6 of the new code.

67. See Prob. Code §§ 10160-10167.

68. The application of this rule in a variety of situations to which it would apply is illustrated in the examples set out in the Comment to proposed Probate Code Section 10162.6.

requiring estate sales to be at least 90 percent of appraised value. The new code conforms Section 9962 to Section 10309(c).

Statutory form for waiver of notice of proposed action

The new code omits the statutory form for waiver of notice of proposed action.[69] Instead, the new code requires use of the Judicial Council form for Statutory Waiver of Notice of Proposed Action Form.[70]

Informal distribution

Section 12250 of the existing code provides for discharge of the personal representative after compliance with the terms of the order for final distribution. While the section does not preclude discharge where distribution is made before entry of an order for distribution, it does not expressly recognize this practice.[71] The new code adds a provision to Section 12250 to recognize the practice of making informal distribution.

Division 8. Disposition of Estate Without Administration

Authority of trustee or attorney in fact

The new code[72] makes clear that, for the purpose of the disposition without administration provisions:

(1) A trustee may act without court approval, even though the trust is subject to the continuing jurisdiction of the court.

(2) An attorney in fact authorized under a durable power of attorney may act on behalf of the beneficiary giving the power of attorney.

---

69. Prob. Code § 10600.

70. See Section 10583(b) of the new code.

71. By way of contrast, the provision governing payment of debts states that the personal representative is not required to pay a debt until the court has ordered payment, but that "[n]othing in this section precludes settlement of an account of a personal representative for payment of a debt made without prior court authorization." Prob. Code § 11422(d).

72. See Section 13051 of the new code.

Affidavit procedure for real property of small value

Section 13205 of the existing code provides a statute of limitations for an action by a person having a superior right where the affidavit procedure for real property of small value has been used.[73] The new code conforms the statute of limitations under this section to the statute of limitations under subdivision (c) of Section 13110 (affidavit procedure for collection or transfer of personal property of small estate) and subdivision (f) of Section 13206 (affidavit procedure for real property of small value).[74]

Restitution if estate proceeding commenced

The new code adds a provision clarifying the rule covering the situation where (1) property has been delivered or transferred to a person pursuant to the provisions for disposition without administration, (2) the person encumbered the property after it was delivered or transferred to the person, and (3) the person is required to restore property delivered or transferred to the estate after an estate proceeding has been commenced. The new code provides that the person making the encumbrance after the delivery or transfer is liable for the amount necessary to satisfy the balance of the encumbrance as of the date the property is restored to the estate.[75]

Division 9. Trust Law

The new code continues the existing code provision relating to holding securities in the name of a nominee but, for consistency with Section 9736 (decedents' estates), omits the

73. Section 13205 of the existing code provides: "An action to impose liability under this section is forever barred five years after the certified copy of the affidavit is issued under Section 13202. This five-year period allowed for commencing the action is tolled during the minority of the person having the superior right, but is not tolled for any other reason."

74. The new statute of limitations under Section 13205 is: "An action to impose liability under this section is forever barred three years after the certified copy of the affidavit is issued under Section 13202, or three years after the discovery of the fraud, whichever is later. The three-year period specified in this subdivision is not tolled for any reason."

75. See Sections 13111(a)(1) and 13206(a)(1) of the new code. This amount is in addition to the property and the net income the person received from the property.

reference to the liability of the trustee for an act of the nominee.[76] This matter is governed by general provisions on liability of a trustee.[77]

Division 10. Proration of Taxes

The new code continues this division of the existing code without substantive change.

Division 11. Construction of Wills, Trusts, and Other Instruments

The new code adds provisions to fill in a gap in the existing provisions governing determination whether a particular motion, petition, or other act by the beneficiary would be a contest within the terms of a no contest clause. The added provisions govern jurisdiction, venue, and the manner of giving notice of the hearing on an application for a determination.[78]

---

76. See Section 16238 of the new code.
77. See, e.g., Prob. Code § 16401.
78. See Sections 21320-21322 of the new code.

OUTLINE OF NEW PROBATE CODE

DIVISION 1. PRELIMINARY PROVISIONS AND DEFINITIONS

PART 1. PRELIMINARY PROVISIONS

§ 1. Title of code
§ 2. Continuation of existing law; construction of provisions drawn from uniform acts
§ 3. General transitional provision
§ 4. Effect of headings in code
§ 5. Certified mail sufficient compliance with requirement of use of registered mail
§ 6. Construction of code
§ 7. Reference to statute includes amendments and additions
§ 8. Reference to division, part, chapter, article, section, or part of section
§ 9. Construction of tenses
§ 10. Construction of singular and plural
§ 11. Severability of provisions
§ 12. Meaning of "shall" and "may"

PART 2. DEFINITIONS

§ 20. Application of definitions
§ 21. "Account"
§ 22. "Account in an insured credit union"
§ 23. "Account in an insured savings and loan association"
§ 24. "Beneficiary"
§ 26. "Child"
§ 28. "Community property"
§ 29. "Conservatee"
§ 30. "Conservator"
§ 32. "Devise"
§ 34. "Devisee"
§ 36. "Dissolution of marriage"
§ 38. "Family allowance"
§ 39. "Fiduciary"
§ 40. "Financial institution"
§ 42. "General personal representative"
§ 44. "Heirs"
§ 45. "Instrument"
§ 46. "Insured account in a financial institution"

§ 48. "Interested person"
§ 50. "Issue"
§ 52. "Letters"
§ 54. "Parent"
§ 55. "Pay-on-death account" or "P.O.D. account"
§ 56. "Person"
§ 58. "Personal representative"; "general personal representative"
§ 59. "Predeceased spouse"
§ 60. "Probate homestead"
§ 62. "Property"
§ 66. "Quasi-community property"
§ 68. "Real property"
§ 70. "Security"
§ 74. "State"
§ 76. "Subscribing witness"
§ 78. "Surviving spouse"
§ 80. "Totten trust account"
§ 81. "Transferor"
§ 82. "Trust"
§ 83. "Trust company"
§ 84. "Trustee"
§ 88. "Will"

DIVISION 2. GENERAL PROVISIONS

PART 1. EFFECT OF DEATH OF MARRIED PERSON ON COMMUNITY AND QUASI-COMMUNITY PROPERTY

§ 100. Community property
§ 101. Quasi-community property
§ 102. Recapture by surviving spouse of certain quasi-community property
§ 103. Effect on community and quasi-community property where not clear one spouse survived the other
§ 104. Community property held in certain revocable trusts
§ 105. Applicability of part

PART 2. SURVIVING SPOUSE'S RIGHT IN CALIFORNIA REAL PROPERTY OF NONDOMICILIARY DECEDENT

§ 120. Surviving spouse's right in California real property of nondomiciliary decedent

PART 3. CONTRACTUAL ARRANGEMENTS RELATING TO RIGHTS AT DEATH

CHAPTER 1. SURVIVING SPOUSE'S WAIVER OF RIGHTS

§ 140. "Waiver" defined
§ 141. Rights that may be waived
§ 142. Requirement of writing and signature; enforceability; defenses
§ 143. Waiver enforceable as of right
§ 144. Waiver enforceable in discretion of court
§ 145. Effect of waiver of "all rights" or complete property settlement
§ 146. Alteration, amendment, or revocation of waiver
§ 147. Validity of waivers and agreements under prior law; validity or effect of premarital property agreements; revocation of consent or election to dispose of property under will of other spouse

CHAPTER 2. CONTRACTS CONCERNING WILL OR SUCCESSION

§ 150. Contract concerning will or succession

PART 4. ESTABLISHING AND REPORTING FACT OF DEATH

CHAPTER 1. PROCEEDINGS TO ESTABLISH DEATH

§ 200. Commencement of proceedings
§ 201. Venue; contents of petition
§ 202. Pendency of administration proceedings; combined proceedings
§ 203. Notice of hearing
§ 204. Admission of petition and affidavits in evidence; judgment as prima facie evidence

CHAPTER 2. RECORDING EVIDENCE OF DEATH

§ 210. Documents which may be recorded
§ 211. Documents subject to statutory requirements; index entry
§ 212. Recorded document as prima facie evidence of death

CHAPTER 3. REPORTING FACT OF DEATH

§ 215. Notice to Director of Health Services

PART 5. SIMULTANEOUS DEATH

CHAPTER 1. GENERAL PROVISIONS

§ 220. Proof of survival by clear and convincing evidence
§ 221. Exceptions to applicability of chapter
§ 222. Survival of beneficiaries
§ 223. Joint tenants
§ 224. Life or accident insurance
§ 226. Chapter not applicable if death prior to January 1, 1985

CHAPTER 2. PROCEEDINGS TO DETERMINE SURVIVAL

§ 230. Petition for purpose of determining survival
§ 231. Persons authorized to file petition
§ 232. Court where petition is to be filed
§ 233. Notice of hearing
§ 234. Determination and order

PART 6. DISTRIBUTION AMONG HEIRS OR BENEFICIARIES

CHAPTER 1. INTESTATE DISTRIBUTION SYSTEM

§ 240. Method of intestate distribution of shares
§ 241. Section 240 not applicable where death occurs before January 1, 1985

CHAPTER 2. DISTRIBUTION UNDER A WILL, TRUST, OR OTHER INSTRUMENT

§ 245. Distribution of shares where instrument does not specify manner
§ 246. Distribution of shares where instrument specifies division by representation or per stirpes
§ 247. Distribution of shares where instrument specifies division per capita at each generation

PART 7. EFFECT OF HOMICIDE

§ 250. Wills, intestate succession, and family protection
§ 251. Joint tenancies
§ 252. Life insurance and other beneficiary designations
§ 253. Cases not controlled by other provisions
§ 254. Determination whether killing was felonious and intentional
§ 255. Good faith purchasers
§ 256. Protection of obligors

§ 257. Applicability of part

PART 8. DISCLAIMER OF TESTAMENTARY AND OTHER INTERESTS

CHAPTER 1. DEFINITIONS

§ 260. Definitions govern construction of this part
§ 262. "Beneficiary"
§ 263. "Creator of the interest"
§ 264. "Disclaimant"
§ 265. "Disclaimer"
§ 266. "Employee benefit plan"
§ 267. "Interest"

CHAPTER 2. GENERAL PROVISIONS

§ 275. Right of beneficiary to disclaim interest
§ 276. Disclaimer on behalf of conservatee
§ 277. Disclaimer on behalf of minor or decedent
§ 278. Contents of disclaimer
§ 279. Time limits for filing disclaimer
§ 280. Filing of disclaimer; recording of disclaimers affecting real property
§ 281. Disclaimer irrevocable and binding
§ 282. Effect of disclaimer
§ 283. Disclaimer not a fraudulent transfer
§ 284. Waiver of right to disclaim
§ 285. Disclaimer not permitted after interest accepted
§ 286. Right to disclaim not affected by spendthrift or similar restriction
§ 287. Application of part to interest created before January 1, 1984
§ 288. Exclusive means of disclaimer

CHAPTER 3. DISCLAIMERS EFFECTIVE UNDER FEDERAL LAW

§ 295. Disclaimer effective under federal law effective under this part

PART 9. TRUST COMPANY AS FIDUCIARY

§ 300. Appointment of trust company
§ 301. Oath and bond of trust company

PART 10. DELIVERY OF DECEDENT'S TANGIBLE PERSONAL PROPERTY

§ 330. Delivery of decedent's tangible personal property

PART 11. FIDUCIARIES' WARTIME SUBSTITUTION LAW

CHAPTER 1. GENERAL PROVISIONS

Article 1. Short Title and Definitions

§ 350. Short title
§ 351. Definitions govern construction of this part
§ 352. "Consultant"
§ 353. "Estate"
§ 354. "Interested person"
§ 355. "Original fiduciary"
§ 356. "War service"

Article 2. Scope of Part

§ 360. Part applies to all fiduciaries
§ 361. Provision in instrument controls

Article 3. Procedural Provisions

§ 365. Jurisdiction of proceedings
§ 366. Notice of hearing

CHAPTER 2. APPOINTMENT OF SUBSTITUTE FIDUCIARY

§ 370. Petition for appointment of substitute, suspension of powers, or account
§ 371. Powers and duties of substitute fiduciary
§ 372. Bond of substitute fiduciary
§ 373. Reinstatement of original fiduciary
§ 374. Fiduciary's immunity for predecessor's acts

CHAPTER 3. DELEGATION OF POWERS

Article 1. Delegation by Fiduciary

§ 380. Delegation of fiduciary's powers
§ 381. Limitations on delegation
§ 382. Resumption of fiduciary's powers
§ 383. Fiduciary's immunity for delegate's acts

Article 2. Delegation by Consultant

§ 385. Delegation of consultant's powers
§ 386. Suspension of consultant's powers
§ 387. Resumption of consultant's powers
§ 388. Consultant's immunity for delegate's acts

PART 12. PROBATE REFEREES

CHAPTER 1. APPOINTMENT AND REVOCATION

§ 400. Appointment by Controller
§ 401. Qualifications for appointment
§ 402. Qualification examination
§ 403. Term of office of probate referee
§ 404. Standards for probate referee
§ 405. Revocation of appointment of probate referee
§ 406. Termination of authority
§ 407. Political activities of probate referees
§ 408. Appointment of probate referee before operative date

CHAPTER 2. POWERS OF PROBATE REFEREE

§ 450. General powers
§ 451. Compelling appearance
§ 452. Examination, testimony, and production of documents
§ 453. Protective orders and enforcement

PART 13. LITIGATION INVOLVING DECEDENT

CHAPTER 1. LIABILITY OF DECEDENT COVERED BY INSURANCE

§ 550. Action authorized
§ 551. Statute of limitations
§ 552. Procedure
§ 553. Defenses
§ 554. Damages
§ 555. Application of chapter

CHAPTER 2. SURVIVAL OF ACTIONS

§ 573. Survival of actions

PART 14. APPLICABILITY OF REPEALED OR AMENDED PROVISIONS RELATING TO COMPENSATION OF ESTATE ATTORNEY AND PERSONAL REPRESENTATIVE

§ 900. Applicability of repealed or amended provisions

DIVISION 3. GENERAL PROVISIONS OF A PROCEDURAL NATURE

PART 1. GENERAL PROVISIONS

CHAPTER 1. RULES OF PRACTICE

§ 1000. General rules of practice
§ 1001. Judicial Council and local court rules; forms
§ 1002. Costs
§ 1003. Appointment of guardian ad litem
§ 1004. Lis pendens

CHAPTER 2. PETITIONS AND OTHER PAPERS

§ 1020. General requirements for petitions, objections, responses, reports, and accounts
§ 1021. Verification required
§ 1022. Affidavit or verified petition as evidence
§ 1023. Signing and verification by attorney

CHAPTER 3. HEARINGS AND ORDERS

§ 1040. General hearing procedure
§ 1041. Clerk to set matters for hearing
§ 1042. Notice of hearing
§ 1043. Response or objection
§ 1044. Plaintiff and defendant
§ 1045. Continuance or postponement
§ 1046. Hearing and order
§ 1047. Recital of jurisdictional facts unnecessary
§ 1048. Entry and filing
§ 1049. Enforcement of order
§ 1050. Judgment roll

PART 2. NOTICES AND CITATIONS

CHAPTER 1. GENERAL NOTICE PROVISIONS

§ 1200. Application of part
§ 1201. Notice not required to be given to oneself or persons joining in petition
§ 1202. Additional notice on court order
§ 1203. Order shortening time
§ 1204. Waiver of notice
§ 1205. Notice of continued or postponed hearing
§ 1206. Notice to known heirs or devisees

§ 1207. Exceptions to notice requirement involving parent-child relationship
§ 1208. Notice to trust beneficiaries where personal representative and trustee are same person
§ 1209. Notice to State of California or to Attorney General
§ 1210. Guardian or conservator acting for ward or conservatee
§ 1211. Form of notice when form not otherwise prescribed

CHAPTER 2. MAILING IN GENERAL

§ 1215. Manner of mailing; when mailing complete
§ 1216. Personal delivery instead of mailing
§ 1217. Mailed notice where no other manner of giving notice specified

CHAPTER 3. MAILING NOTICE OF HEARING

§ 1220. General manner of mailing notice of hearing
§ 1221. Period and manner of giving notice of hearing where not otherwise prescribed by statute

CHAPTER 4. POSTING NOTICE OF HEARING

§ 1230. Manner of posting notice of hearing

CHAPTER 5. CITATIONS

§ 1240. Issuance of citation
§ 1241. Contents of citation
§ 1242. Service of citation

CHAPTER 6. REQUEST FOR SPECIAL NOTICE

§ 1250. Request for special notice
§ 1251. Modification or withdrawal of request for special notice
§ 1252. Notice to be given to person requesting special notice

CHAPTER 7. PROOF OF GIVING NOTICE

§ 1260. Proof of giving notice of hearing required; conclusiveness of order
§ 1261. Proof of mailing
§ 1262. Proof of publication
§ 1263. Proof of posting
§ 1264. Proof of personal delivery
§ 1265. Proof by testimony at hearing

DIVISION 4. GUARDIANSHIP, CONSERVATORSHIP, AND OTHER PROTECTIVE PROCEEDINGS

PART 1. DEFINITIONS AND GENERAL PROVISIONS

CHAPTER 1. SHORT TITLE AND DEFINITIONS

§ 1400. Short title
§ 1401. Application of definitions
§ 1403. "Absentee"
§ 1418. "Court"
§ 1419. "Court investigator"
§ 1420. "Developmental disability"
§ 1424. "Interested person"
§ 1430. "Petition"
§ 1431. "Proceedings to establish a limited conservatorship"
§ 1440. "Secretary concerned"
§ 1446. "Single-premium deferred annuity"

CHAPTER 2. GENERAL PROVISIONS

§ 1452. Trial by jury
§ 1453. When motion for new trial allowed
§ 1454. Appointment of court investigator

CHAPTER 3. NOTICES

§ 1460. Notice of hearings generally
§ 1461. Notice to Director of Mental Health or Director of Developmental Services
§ 1461.4. Notice to director of regional center
§ 1461.5. Notice to Veterans Administration
§ 1461.7. Notice of time and place of hearing on petition, report, or account where conservatee is a missing person
§ 1467. When service by mail deemed complete
§ 1469. Reference to Section 1220 considered a reference to this chapter

CHAPTER 4. APPOINTMENT OF LEGAL COUNSEL

§ 1470. Discretionary appointment of legal counsel
§ 1471. Mandatory appointment of legal counsel
§ 1472. Compensation of mandatory court-appointed counsel

CHAPTER 5. TRANSITIONAL PROVISIONS

§ 1488. Effect of nomination by adult of guardian for such adult
§ 1489. Effect of appointment of guardian by parent or other person for a minor
§ 1490. References in statutes

PART 2. GUARDIANSHIP

CHAPTER 1. ESTABLISHMENT OF GUARDIANSHIP

Article 1. Nomination of Guardian

§ 1500. Nomination of guardian of person or estate or both by parent
§ 1501. Nomination of guardian as to particular property
§ 1502. Manner of making nomination; when effective; effect of subsequent legal incapacity or death of nominator

Article 2. Appointment of Guardian Generally

§ 1510. Petition for appointment
§ 1511. Notice of hearing
§ 1512. Amendment of petition to disclose newly discovered proceeding affecting custody
§ 1513. Investigation and report by court-designated officer
§ 1513.1. Assessment for expense of county investigation and review
§ 1514. Appointment of guardian
§ 1515. No guardian of person for married minor
§ 1516. Notice to local agency designated to investigate guardianships

Article 3. Nonrelative Guardianships

§ 1540. Application of article
§ 1541. Additional contents of petition for guardianship
§ 1542. Notice to Director of Social Services and to local agency designated to investigate guardianships
§ 1543. Report on suitability of guardian

CHAPTER 2. TERMINATION

§ 1600. Majority, death, adoption, or marriage of ward
§ 1601. Termination by court order

PART 3. CONSERVATORSHIP

CHAPTER 1. ESTABLISHMENT OF CONSERVATORSHIP

Article 1. Persons for Whom Conservator May be Appointed

§ 1800. Legislative intent

§ 1800.3. Conservatorships for adults or married minors
§ 1801. Showing required for appointment generally
§ 1802. Appointment upon request of proposed conservatee
§ 1803. Conservator of estate of "absentee"
§ 1804. Conservator of estate of missing person

Article 2. Order of Preference for Appointment of Conservator

§ 1810. Nomination by proposed conservatee
§ 1811. Nomination by spouse or relative of proposed conservatee
§ 1812. Order of preference for appointment as conservator
§ 1813. Condition for appointment of absentee's spouse

Article 3. Establishment of Conservatorship

§ 1820. Filing of petition
§ 1821. Contents of petition
§ 1822. Notice of hearing
§ 1823. Citation to proposed conservatee
§ 1824. Service on proposed conservatee of citation and petition
§ 1825. Attendance of proposed conservatee at hearing
§ 1826. Investigation and report by court investigator if proposed conservatee will not attend hearing
§ 1827. Law and procedure applicable to hearing
§ 1827.5. Assessment of proposed limited conservatee at regional center
§ 1828. Information to proposed conservatee by court
§ 1828.5. Inquiry and information by court in limited conservatorship proceeding
§ 1829. Persons who may support or oppose petition
§ 1830. Contents of order appointing conservator
§ 1835. Informational package for private conservator

Article 4. Special Provisions Applicable Where Proposed Conservatee is an Absentee

§ 1840. Procedure for appointment of conservator for absentee
§ 1841. Additional contents of petition
§ 1842. Notice of hearing
§ 1843. Citation to proposed conservatee not required
§ 1844. Proof of status of proposed conservatee; attendance at hearing not required

Article 5. Special Provisions Applicable Where Proposed Conservatee Is a Missing Person

§ 1845. Appointment of conservator of estate of missing person whose whereabouts are unknown

§ 1846. Additional contents of petition
§ 1847. Notice of hearing
§ 1848. Acts not required in proceeding
§ 1849. Findings prerequisite to appointment of conservator
§ 1849.5. Application of article

CHAPTER 2. PERIODIC REVIEW OF CONSERVATORSHIP

§ 1850. Court review of conservatorship
§ 1851. Visitation and findings by court investigator
§ 1851.5. Assessment of estate for investigation expense
§ 1852. Notification of counsel; representation of conservatee at hearing
§ 1853. Failure to locate conservatee; removal of conservator on failure to produce conservatee; petition to appoint new conservator

CHAPTER 3. TERMINATION

§ 1860. When conservatorship terminates
§ 1860.5. When limited conservatorship terminates
§ 1861. Petition for termination of conservatorship
§ 1862. Notice of hearing
§ 1863. Hearing and judgment
§ 1864. Termination of conservatorship of absentee
§ 1865. Restoring right to vote

CHAPTER 4. LEGAL CAPACITY OF CONSERVATEE

Article 1. Capacity to Bind or Obligate Conservatorship Estate

§ 1870. "Transaction" defined
§ 1871. Rights not affected by conservatorship
§ 1872. Effect of conservatorship on legal capacity of conservatee
§ 1873. Court order affecting legal capacity of conservatee
§ 1874. Petition for order affecting legal capacity of conservatee
§ 1875. Good faith purchaser or encumbrancer of real property
§ 1876. Applicability of other governing law

Article 2. Capacity to Give Informed Consent for Medical Treatment

§ 1880. Order granting conservator exclusive authority to give consent for medical treatment
§ 1890. Time for making order; procedure

§ 1891. Petition
§ 1892. Notice of hearing
§ 1893. Attendance of conservatee at hearing
§ 1894. Investigation by court investigator if conservatee will not attend hearing
§ 1895. Hearing
§ 1896. Order
§ 1897. Duration of order
§ 1898. Modification or revocation of order

Article 3. Capacity of Conservatee to Marry

§ 1900. Capacity to marry
§ 1901. Order respecting capacity

CHAPTER 5. DISQUALIFICATION FROM VOTING

§ 1910. Disqualification from voting

CHAPTER 6. STERILIZATION

§ 1950. Legislative intent
§ 1951. Ability to consent; definitions
§ 1952. Petition for appointment of limited conservator
§ 1953. Notice of hearing
§ 1954. Appointment of counsel
§ 1954.5. Appointment of facilitator; duties
§ 1955. Coordination of investigation by regional center; examination by physicians; reports
§ 1956. Presence of conservatee at hearing
§ 1957. Consideration of conservatee's views
§ 1958. Factors to be established beyond a reasonable doubt before consent to sterilization may be authorized
§ 1959. Vulnerability to unlawful sexual conduct by others
§ 1960. Persons who already have conservator
§ 1961. Sterilization procedure
§ 1962. Statement of decision; automatic appeal
§ 1963. Payment of court costs and fees
§ 1964. Expiration of court order and termination of conservatorship; reappointment
§ 1965. Stay of order pending appeal
§ 1966. Material change in circumstances prerequisite to new petition after petition denied
§ 1967. Civil and criminal liability
§ 1968. Sterilization resulting from other treatment or surgery

§ 1969. Rights of developmentally disabled persons capable of giving consent

PART 4. PROVISIONS COMMON TO GUARDIANSHIP AND CONSERVATORSHIP

CHAPTER 1. GENERAL PROVISIONS

§ 2100. Law governing guardianships and conservatorships
§ 2101. Relationship is a fiduciary relationship
§ 2102. Court supervision
§ 2103. Effect of court authorization, approval, or confirmation
§ 2104. Nonprofit charitable corporation as guardian or conservator
§ 2105. Joint guardians or conservators
§ 2105.5. Liability of joint guardian or conservator of estate for breach by other guardian or conservator
§ 2106. One guardian or conservator for several wards or conservatees
§ 2107. Powers and duties of guardian or conservator of nonresident
§ 2108. Additional powers granted nominated guardian
§ 2109. Powers and duties of guardian as to particular property; allocation of duties between guardians
§ 2110. Liability of guardian or conservator who signs instrument
§ 2111. Transfer or conveyance of property pursuant to court order
§ 2112. Application of federal Indian law

CHAPTER 2. JURISDICTION AND VENUE

Article 1. Jurisdiction and Venue

§ 2200. Jurisdiction in superior court
§ 2201. Venue for residents
§ 2202. Venue for nonresidents
§ 2203. Court having priority where proceedings commenced in several counties

Article 2. Change of Venue

§ 2210. Definitions
§ 2211. Authority to transfer proceeding
§ 2212. Who may petition for transfer
§ 2213. Contents of petition
§ 2214. Notice of hearing
§ 2215. Hearing and order
§ 2216. Transfer procedure

CHAPTER 3. TEMPORARY GUARDIANS AND CONSERVATORS

§ 2250. Appointment
§ 2251. Issuance of letters
§ 2252. Powers and duties
§ 2253. Change of conservatee's residence generally
§ 2254. Removal of conservatee from residence in case of emergency
§ 2255. Inventory and appraisal of estate
§ 2256. Accounts
§ 2257. Termination
§ 2258. Suspension, removal, resignation, and discharge

CHAPTER 4. OATH, LETTERS, AND BOND

Article 1. Requirement of Oath and Bond

§ 2300. Oath and bond required before appointment effective

Article 2. Letters

§ 2310. Issuance of letters
§ 2311. Form of letters
§ 2312. Notice to ward or conservatee

Article 3. Bonds of Guardians and Conservators

§ 2320. General requirement of bond; amount
§ 2321. Waiver of bond by conservatee
§ 2322. Guardian or conservator of person only
§ 2323. Small estate
§ 2324. Nominated guardian
§ 2325. Bond of nonprofit charitable corporation
§ 2326. Joint guardians or conservators
§ 2327. Several wards or conservatees
§ 2328. Deposit of money or other property subject to court control
§ 2329. Reduction of amount of bond
§ 2330. Additional bond on real property transactions
§ 2333. Suit against sureties on bond; limitation period
§ 2334. Suspension of powers upon filing of petition to require bond or objection to sufficiency of bond
§ 2335. Substitution of surety

Article 4. Registration of Private Professional Conservators

§ 2340. Prerequisite to appointment of private professional conservator
§ 2341. Private professional conservator

§ 2342. Statement and background check of private professional conservator
§ 2343. Annual filing fee

CHAPTER 5. POWERS AND DUTIES OF GUARDIAN OR CONSERVATOR OF THE PERSON

§ 2350. Definitions
§ 2351. Care, custody, control, and education
§ 2351.5. Powers of limited conservator
§ 2352. Residence of ward or conservatee
§ 2353. Medical treatment of ward
§ 2354. Medical treatment of conservatee not adjudicated to lack capacity to give informed consent
§ 2355. Medical treatment of conservatee adjudicated to lack capacity to give informed consent
§ 2356. Prohibited treatment and drugs
§ 2357. Court-authorized medical treatment for ward or conservatee
§ 2358. Additional conditions in order of appointment
§ 2359. Instructions from or confirmation by court

CHAPTER 6. POWERS AND DUTIES OF GUARDIAN OR CONSERVATOR OF THE ESTATE

Article 1. Definitions and General Provisions

§ 2400. Definitions
§ 2401. Duty to manage estate using ordinary care and diligence
§ 2401.3. Measure of liability for breach of fiduciary duty
§ 2401.5. Measure of liability for interest
§ 2401.7. Other remedies not affected
§ 2402. Additional conditions in order of appointment
§ 2403. Instructions from or confirmation by court
§ 2404. Order compelling guardian or conservator to pay support or debts
§ 2405. Submitting disputed claim for summary determination
§ 2406. Submitting dispute to arbitration
§ 2407. Application of chapter to community property
§ 2408. Independent administration

Article 2. Support and Maintenance of Ward or Conservatee and Dependents

§ 2420. Support, maintenance, and education
§ 2421. Personal allowance for ward or conservatee
§ 2422. Order authorizing support notwithstanding third party liable

§ 2423. Payment of surplus income to relatives of conservatee

Article 3. Payment of Debts and Expenses

§ 2430. Payment of debts and expenses generally
§ 2431. Priority for wage claims

Article 4. Estate Management Powers Generally

§ 2450. Extent of court supervision
§ 2451. Collection of debts and benefits
§ 2452. Checks, warrants, and drafts
§ 2453. Deposit in insured account in financial institution
§ 2453.5. Interest on deposits by trust company
§ 2454. Deposit of personal property with trust company
§ 2455. Deposit of securities in securities depository
§ 2456. Accounts and deposits withdrawable only on court order
§ 2457. Maintaining home of ward or conservatee and dependents
§ 2458. Voting rights with respect to corporate shares or memberships or property
§ 2459. Life insurance, medical, retirement, and other plans and benefits
§ 2460. Liability and casualty insurance
§ 2461. Taxes and tax returns
§ 2462. Representation in actions and proceedings
§ 2463. Partition actions
§ 2464. Acceptance of deed in lieu of foreclosure or trustee's sale
§ 2465. Abandonment of valueless property
§ 2466. Advances by guardian or conservator
§ 2467. Care of estate after death of ward or conservatee

Article 5. Compromise of Claims and Actions; Extension, Renewal, or Modification of Obligations

§ 2500. Authority to compromise claims and actions and to extend, renew, or modify obligations
§ 2501. Matters relating to real property
§ 2502. Compromise in excess of specified amounts
§ 2503. Compromise of claim of ward or conservatee against guardian or conservator or attorney for guardian or conservator; modification of terms of obligation of guardian or conservator or attorney owing to ward or conservatee or estate
§ 2504. Support, wrongful death, and personal injury claims
§ 2505. Court from which approval is to be obtained

§ 2506. Petition for approval of court in guardianship or conservatorship proceeding
§ 2507. When another statute controls

Article 6. Conveyance or Transfer of Property Claimed to Belong to Ward or Conservatee or Other Person

§ 2520. Petition for order
§ 2521. Notice of hearing
§ 2522. Continuance for preparation for hearing
§ 2524. Denial of petition if objection based on venue
§ 2525. Abatement of petition if civil action pending
§ 2526. Denial of petition if matter should be determined by civil action
§ 2527. Order
§ 2528. Execution of conveyance or transfer; effect of order

Article 7. Sales

§ 2540. Extent of court supervision
§ 2541. Purposes for which sale may be made
§ 2542. Terms of sale
§ 2543. Manner of sale
§ 2544. Securities sold on established exchange; certain over-the-counter securities
§ 2545. Sale or other disposition of tangible personal property not exceeding $5,000 in value
§ 2547. Disposition of proceeds of sale
§ 2548. Limitation of action to recover property sold

Article 8. Notes, Mortgages, Leases, Conveyances, and Exchanges

§ 2550. Extent of court supervision
§ 2551. Borrowing money and giving security therefor
§ 2552. Refinancing or improving or repairing property
§ 2552.5. Lease term
§ 2553. Order authorizing lease required
§ 2554. Terms and conditions of leases
§ 2555. Leases permitted without court authorization
§ 2556. Dedication or conveyance of real property or easement with or without consideration
§ 2557. Exchange of property

Article 9. Investments and Purchase of Property

§ 2570. Authority to invest generally; petition; hearing; order

§ 2571. Purchase of home for ward or conservatee or dependents
§ 2572. Order authorizing purchase of real property
§ 2573. Order authorizing investment in government bonds
§ 2574. United States and State of California obligations; listed stocks, bonds, and other securities

Article 10. Substituted Judgment

§ 2580. Petition to authorize proposed action
§ 2581. Notice of hearing
§ 2582. Consent or lack of capacity of conservatee; adequate provision for conservatee and dependents
§ 2583. Circumstances considered in determining whether to approve proposed action
§ 2584. Order
§ 2585. No duty to propose action
§ 2586. Production of conservatee's will and other relevant estate plan documents

Article 11. Independent Exercise of Powers

§ 2590. Order granting authority for independent exercise of powers
§ 2591. Powers that may be granted
§ 2592. Petition
§ 2593. Withdrawal or subsequent limitation of powers
§ 2594. Contents of letters; when new letters required
§ 2595. Use of other statutory authorizations or procedures not precluded

CHAPTER 7. INVENTORY AND ACCOUNTS

Article 1. Definitions and General Provisions

§ 2600. Definitions
§ 2601. Wages of ward or conservatee

Article 2. Inventory and Appraisal of Estate

§ 2610. Filing inventory and appraisal
§ 2611. Sending copy to Director of Mental Health or Director of Developmental Services
§ 2612. Sending copy to county assessor
§ 2613. Subsequently discovered or acquired property; supplemental inventory and appraisal
§ 2614. Objections to appraisals
§ 2614.5. Order to file inventory and appraisal
§ 2615. Damages for failure to file inventory

Article 2.5. Examination Concerning Assets of Estate

§ 2616. Examination concerning assets of estate
§ 2617. Written interrogatories
§ 2618. Examination in court
§ 2619. Citation to person controlling estate property
§ 2619.5. Double damages

Article 3. Accounts

§ 2620. Presentation of account periodically for settlement and allowance; contents of account; petition may include other requests
§ 2620.1. Conservatee's status report
§ 2620.2 Failure to file account
§ 2621. Notice of hearing
§ 2622. Objections to account
§ 2623. Allowance for expenses, compensation, and disbursements
§ 2624. Investment of cash
§ 2625. Review of sales, purchases, and other transactions
§ 2626. Termination of proceeding upon exhaustion of estate
§ 2627. Settlement of accounts and release by ward; discharge of guardian
§ 2628. No accounting required for certain small estates
§ 2629. Compelling filing of account

Article 4. Accounts on Termination of Relationship

§ 2630. Continuing jurisdiction of court
§ 2631. Death of ward or conservatee; disposition of assets
§ 2632. Account of dead, incapacitated, or absconding guardian or conservator
§ 2633. Termination before inventory is filed

CHAPTER 8. COMPENSATION OF GUARDIAN, CONSERVATOR, AND ATTORNEY

§ 2640. Petition by guardian or conservator of estate
§ 2641. Petition by guardian or conservator of person
§ 2642. Petition by attorney
§ 2643. Order authorizing periodic payments of compensation to guardian or conservator or attorney
§ 2644. Contingent fee contract with attorney

CHAPTER 9. REMOVAL OR RESIGNATION

Article 1. Removal of Guardian or Conservator

§ 2650. Causes for removal

§ 2651. Petition for removal
§ 2652. Notice of hearing
§ 2653. Hearing and judgment
§ 2654. Surrender of estate and suspension of powers pending hearing
§ 2655. Contempt

Article 2. Resignation of Guardian or Conservator

§ 2660. Resignation of guardian or conservator

CHAPTER 9.5. APPOINTMENT OF SUCCESSOR GUARDIAN OR CONSERVATOR

Article 1. Appointment of Successor Guardian

§ 2670. Court authorized to appoint successor guardian

Article 2. Appointment of Successor Conservator

§ 2680. Court authorized to appoint successor conservator
§ 2681. Who may file petition
§ 2682. Contents of petition
§ 2683. Notice of hearing
§ 2684. Interview and report by court investigator
§ 2685. Information to conservatee by court
§ 2686. Conservatee fails to attend hearing
§ 2687. Persons who may support or oppose petition
§ 2688. Order appointing successor conservator
§ 2689. Provisions applicable where conservatee is an "absentee"

CHAPTER 10. REQUESTS FOR SPECIAL NOTICE

§ 2700. Request for special notice
§ 2701. Modification or withdrawal of request; new request
§ 2702. Petitioner required to give requested special notice

CHAPTER 11. APPEALS

§ 2750. Appealable orders
§ 2751. Stay
§ 2752. Reversal of order appointing guardian or conservator

CHAPTER 12. TRANSFER OF PERSONAL PROPERTY OUT OF STATE

§ 2800. "Foreign guardian or conservator" defined
§ 2801. Order for transfer of assets out of state
§ 2802. Who may petition for transfer
§ 2803. Contents of petition
§ 2804. Notice of hearing

§ 2805. Objections to petition
§ 2806. Order for transfer
§ 2807. Manner of transfer; conditions
§ 2808. Termination of guardianship or conservatorship

PART 5. PUBLIC GUARDIAN

CHAPTER 1. TAKING TEMPORARY POSSESSION OR CONTROL OF PROPERTY

§ 2900. Authority to take possession or control
§ 2901. Recording certification in county property records; providing information and property to public guardian
§ 2902. Costs and compensation for taking possession or control
§ 2903. Transitional provision

CHAPTER 2. APPOINTMENT OF PUBLIC GUARDIAN

§ 2920. Application for appointment
§ 2921. Persons under jurisdiction of Departments of Mental Health or Developmental Services
§ 2922. Letters, oath, and bond

CHAPTER 3. ADMINISTRATION BY PUBLIC GUARDIAN

§ 2940. Deposit or investment of funds
§ 2941. Employment of attorneys
§ 2942. Compensation and expenses of public guardian; bond fee
§ 2943. Inventory and appraisal
§ 2944. Immunity of public guardian

PART 6. MANAGEMENT OR DISPOSITION OF COMMUNITY PROPERTY WHERE SPOUSE LACKS LEGAL CAPACITY

CHAPTER 1. DEFINITIONS AND GENERAL PROVISIONS

Article 1. Definitions

§ 3000. Application of definitions
§ 3002. "Community property"
§ 3004. "Conservator"
§ 3006. "Conservatorship estate"
§ 3008. "Conservatorship proceeding"
§ 3012. "Legal capacity" with respect to community property

Article 2. General Provisions

§ 3020. Rights of spouses in community property preserved
§ 3023. Determination of character of property
§ 3024. Appeals

CHAPTER 2. MANAGEMENT, CONTROL, AND DISPOSITION

Article 1. Management, Control, and Disposition Generally

§ 3051. Community property
§ 3054. Authority of court
§ 3055. Effect on consent of death or subsequent lack of legal capacity
§ 3056. Manner of management, control, and disposition of property as part of conservatorship estate
§ 3057. Protection of rights of spouse who lacks legal capacity

Article 2. Substitute for Joinder or Consent Requirements

§ 3070. Article provides substitute for joinder or consent requirements of other statutes
§ 3071. Substitute for joinder or consent
§ 3072. Court order authorizing joinder or consent by conservator
§ 3073. Manner of joinder or consent
§ 3074. Good faith purchaser or encumbrancer for value

Article 3. Enforcement of Support of Spouse Who Has Conservator

§ 3080. Petition
§ 3081. Notice of hearing
§ 3082. Examination of spouse in control of property
§ 3083. Order
§ 3084. Income and expense declaration and property declaration
§ 3085. Ex parte orders pending determination
§ 3086. Continuance
§ 3087. Determination of character of property
§ 3088. Order for support and maintenance of conservatee
§ 3089. Division of community property
§ 3090. Enforcement of orders
§ 3091. Judicial Council rules
§ 3092. Other procedures not limited

CHAPTER 3. PROCEEDING FOR PARTICULAR TRANSACTION

Article 1. General Provisions

§ 3100. "Transaction" defined
§ 3101. Nature of proceeding under this chapter
§ 3102. Transactions that may be subject of the proceeding

Article 2. Commencement of Proceeding

§ 3110. Jurisdiction and venue
§ 3111. Who may file petition
§ 3112. Representation of petitioning spouse
§ 3113. Appointment of conservator not required

Article 3. Petition

§ 3120. Combining several transactions; permissible allegations
§ 3121. Required contents of petition
§ 3122. Petition for court order authorizing transaction
§ 3123. Petition for court order declaring legal capacity for transaction

Article 4. Citation and Notice of Hearing

§ 3130. Citation to nonpetitioning spouse alleged to lack legal capacity; notice to conservator in lieu of citation
§ 3131. Notice to nonpetitioning spouse having legal capacity and relatives

Article 5. Hearing and Order

§ 3140. Representation of spouse alleged to lack legal capacity; appointment of legal counsel
§ 3141. Presence of spouse at hearing
§ 3142. Information to be given to spouse by court
§ 3143. Order declaring legal capacity
§ 3144. Court determinations before authorizing transaction; order authorizing transaction
§ 3145. Effect of determination of lack of legal capacity

Article 6. Consummation of Transaction

§ 3150. Bond
§ 3151. Execution, delivery, and recording of documents; credit sales
§ 3152. Effect of action taken pursuant to court order
§ 3153. Liability of conservator
§ 3154. Further proceedings if transaction not consummated

PART 7. AUTHORIZATION OF MEDICAL TREATMENT FOR ADULT WITHOUT CONSERVATOR

§ 3200. "Patient" defined
§ 3201. Petition for court authorization for medical treatment
§ 3202. Jurisdiction and venue
§ 3203. Who may file petition
§ 3204. Contents of petition
§ 3205. Appointment of legal counsel
§ 3206. Notice of hearing
§ 3207. Submission for determination on medical affidavits
§ 3208. Court-authorized medical treatment for person unable to consent to treatment
§ 3209. Continuing jurisdiction of court
§ 3210. Procedure supplemental and alternative
§ 3211. Prohibited treatment

PART 8. OTHER PROTECTIVE PROCEEDINGS

CHAPTER 1. GENERAL PROVISIONS

§ 3300. Parent must account to minor
§ 3301. Consent of court for hospital or medical care or enlistment in armed forces
§ 3302. Approval of contract for attorney's fees for minor; fees in absence of contract
§ 3303. Effect on Uniform Transfers to Minors Act

CHAPTER 2. MONEY OR PROPERTY BELONGING TO MINOR

Article 1. Total Estate Not in Excess of $5,000

§ 3400. "Total estate of the minor" defined
§ 3401. Delivery of money or property to parent
§ 3402. Effect of written receipt of parent

Article 2. Property in the Form of Money

§ 3410. Application of article; computing "money belonging to the minor"
§ 3411. Filing of petition
§ 3412. Order of court where guardianship of estate
§ 3413. Order of court where no guardianship of estate

CHAPTER 3. COMPROMISE BY PARENT OF MINOR'S DISPUTED CLAIM

§ 3500. Parent's right to compromise minor's claim

CHAPTER 4. MONEY OR PROPERTY PAID OR DELIVERED PURSUANT TO COMPROMISE OR JUDGMENT FOR MINOR OR INCOMPETENT PERSON

Article 1. General Provisions

§ 3600. Application of article
§ 3601. Order directing payment of expenses, costs, and fees
§ 3602. Disposition of remaining balance
§ 3603. Reference to "incompetent person"

Article 2. Disposition of Money or Other Property Where No Guardianship or Conservatorship

§ 3610. Disposition of remaining balance
§ 3611. Order of court
§ 3612. Reservation of jurisdiction until minor attains age 18

CHAPTER 5. PERSONAL PROPERTY OF ABSENT FEDERAL PERSONNEL

Article 1. Definitions

§ 3700. Definitions

Article 2. Court Proceeding to Set Aside Personal Property of Absentee

§ 3701. Setting aside personal property of absentee
§ 3702. Who may petition
§ 3703. Contents of petition
§ 3704. Notice of hearing
§ 3705. Hearing and order
§ 3706. Jurisdiction of court not affected by size of absentee's estate
§ 3707. Joint tenancy property
§ 3708. Accounting

Article 3. Management and Disposition of Personal Property of Absentee Without Court Proceeding

§ 3710. Right of absentee's family to collect and dispose of property
§ 3711. Transfer of evidences of interest, indebtedness, or right
§ 3712. Commencement of time for action by absentee

Article 4. Absentee's Power of Attorney

§ 3720. Continuation of expired power of attorney

CHAPTER 6. REMOVAL OF PROPERTY OF NONRESIDENT

§ 3800. Petition
§ 3801. Notice
§ 3802. Certificate of nonresident fiduciary
§ 3803. Order for removal

PART 9. CALIFORNIA UNIFORM TRANSFERS TO MINORS ACT

§ 3900. Short title
§ 3901. Definitions
§ 3902. Scope and jurisdiction
§ 3903. Nomination of custodian
§ 3904. Transfer by gift or exercise of power of appointment
§ 3905. Transfer authorized by will or trust
§ 3906. Other transfer by fiduciary
§ 3907. Transfer by obligor
§ 3908. Receipt for custodial property
§ 3909. Methods of creation and transfer of custodial property
§ 3910. Single custodianship
§ 3911. Validity and effect of transfer
§ 3912. Care of custodial property
§ 3913. Powers of custodian
§ 3914. Use of custodial property
§ 3915. Custodian's expenses, compensation, and bond
§ 3916. Protection of third person from liability
§ 3917. Liability to third persons
§ 3918. Renunciation, resignation, death, or removal of custodian; designation of successor custodian
§ 3919. Accounting by and determination of liability of custodian
§ 3920. Termination of custodianship
§ 3920.5. Delayed time for transfer to minor; procedure
§ 3921. Venue
§ 3922. Transfers subject to part
§ 3923. Transfers made before January 1, 1985
§ 3925. Method of transfer provided by part not exclusive

DIVISION 5. NONPROBATE TRANSFERS

PART 1. PROVISIONS RELATING TO EFFECT OF DEATH

§ 5000. Nonprobate transfers at death

PART 2. MULTIPLE-PARTY ACCOUNTS

CHAPTER 1. SHORT TITLE AND DEFINITIONS

Article 1. Short Title

§ 5100. Citation of part

Article 2. Definitions

§ 5120. Application of definitions
§ 5122. Account
§ 5124. Agent
§ 5126. Beneficiary
§ 5128. Financial institution
§ 5130. Joint account
§ 5132. Multiple-party account
§ 5134. Net contribution
§ 5136. Party
§ 5138. Payment
§ 5139. P.O.D.
§ 5140. P.O.D. account
§ 5142. P.O.D. payee
§ 5144. Proof of death
§ 5146. Receives
§ 5148. Request
§ 5150. Sums on deposit
§ 5152. Withdrawal

CHAPTER 2. GENERAL PROVISIONS

§ 5201. Governing provisions
§ 5202. Transfer in fraud of creditors
§ 5203. Creation of multiple-party relationship
§ 5204. Special power of attorney for account transactions
§ 5205. Application of part

CHAPTER 3. OWNERSHIP BETWEEN PARTIES AND THEIR CREDITORS AND SUCCESSORS

§ 5301. Ownership during lifetime
§ 5302. Right of survivorship

§ 5303. Rights of survivorship determined by form of account at time of death; methods for change of terms of account
§ 5304. Testamentary effect of statutory survivorship provisions
§ 5305. Presumption that sums on deposit are community property
§ 5306. Account expressly described as "tenancy in common" account
§ 5307. Account expressly described as "community property" account

CHAPTER 4. PROTECTION OF FINANCIAL INSTITUTION

§ 5401. Multiple-party accounts; terms; requirements
§ 5402. Payment of joint account
§ 5403. Payment of P.O.D. account
§ 5404. Payment of Totten trust account
§ 5405. Payment as discharge; refusal to pay upon receipt of notice
§ 5406. Payment of account held in trust form where financial institution has no notice that account is not a "Totten trust account"
§ 5407. Payment to minor

DIVISION 6. WILLS AND INTESTATE SUCCESSION

PART 1. WILLS

CHAPTER 1. GENERAL PROVISIONS

§ 6100. Persons who may make a will
§ 6100.5. Persons not mentally competent to make a will
§ 6101. Property which may be disposed of by will
§ 6102. Persons to whom will may dispose of property
§ 6103. Application of certain chapters where testator died before January 1, 1985
§ 6104. Effect of duress, menace, fraud, or undue influence
§ 6105. Conditional will

CHAPTER 2. EXECUTION OF WILLS

§ 6110. Witnessed will
§ 6111. Holographic will
§ 6112. Witnesses; interested witnesses
§ 6113. Choice of law as to validity of execution of will

CHAPTER 3. REVOCATION AND REVIVAL

§ 6120. Revocation by subsequent will or by act
§ 6121. Revocation of will executed in duplicate

§ 6122. Dissolution or annulment of marriage; provisions revoked; no revocation by other change in circumstances
§ 6123. Second will revoking first will; effect of revocation of second will
§ 6124. Presumption that will destroyed with intent to revoke

CHAPTER 4. REFERENCE TO MATTERS OUTSIDE THE WILL

§ 6130. Incorporation by reference
§ 6131. References to acts and events of independent significance

CHAPTER 5. RULES OF CONSTRUCTION OF WILLS

Article 1. General Provisions

§ 6140. Intention of testator
§ 6141. Choice of law as to meaning and effect of disposition in will
§ 6142. Will passes all property, including after-acquired property
§ 6143. Devisees as owners in common
§ 6144. Direction in will to convert real property to money
§ 6145. Common law rule of worthier title abolished
§ 6146. Failure of devisee to survive
§ 6147. Anti-lapse statute; substitute devisee
§ 6148. Failed devise
§ 6149. Conditions regarding "issue"
§ 6150. Devise to a class; time of vesting; afterborn member
§ 6151. Class gift to "heirs," "next of kin," "relatives," or the like
§ 6152. Half-bloods, adopted persons, persons born out of wedlock, stepchildren, and foster children
§ 6153. Presumption that testamentary disposition vests at testator's death
§ 6154. Classification of devises

Article 2. Ascertaining Meaning of Language Used in the Will

§ 6160. Every expression to be given some effect; intestacy to be avoided
§ 6161. Construction of will as a whole
§ 6162. Words given their ordinary meaning; technical words

Article 3. Exoneration; Ademption

§ 6165. Rules of construction if testator's intention not indicated
§ 6170. No exoneration of lien where specific devise
§ 6171. Specific devise of securities

§ 6172. Unpaid proceeds of sale, condemnation, or insurance; property obtained as a result of foreclosure
§ 6173. Specifically devised property sold by conservator; proceeds of specifically devised property paid to conservator
§ 6174. Property given during testator's lifetime; ademption by satisfaction
§ 6175. Contract by testator for sale or transfer of specifically devised property
§ 6176. Encumbrance on specifically devised property after execution of will
§ 6177. Alteration of testator's interest in specifically devised property after execution of will
§ 6178. Rules stated in Sections 6172 to 6177 not exhaustive
§ 6179. Death of decedent before January 1, 1985

CHAPTER 6. CALIFORNIA STATUTORY WILL

Article 1. Definitions and Rules of Construction

§ 6200. Definitions and rules of construction that govern this chapter
§ 6201. "Testator"
§ 6202. "Spouse"
§ 6203. "Executor"
§ 6204. "Trustee"
§ 6205. "Descendants"
§ 6206. Reference to Uniform Gifts to Minors Act
§ 6207. Masculine pronouns; plural and singular words
§ 6208. Use of "shall" or "may" in statutory will
§ 6209. Manner of distribution to "descendants"
§ 6210. "Person"

Article 2. General Provisions

§ 6220. Persons who may execute statutory wills
§ 6221. Execution procedure
§ 6221.5. Execution of attestation clause
§ 6222. Types of statutory wills; contents
§ 6223. Selection of more than one or no property disposition clause
§ 6224. Titles of clauses disregarded
§ 6225. Revocation or amendment of statutory will
§ 6226. Effect of dissolution or annulment of testator's marriage

Article 3. Form and Full Text of Clauses

§ 6240. California statutory will form
§ 6241. California statutory will with trust form

§ 6242. Full text of paragraph 2.1 of all California statutory wills
§ 6243. Full text of property disposition clauses of California statutory will form
§ 6244. Full text of property disposition clauses of California statutory will with trust form
§ 6245. Mandatory clauses of all California statutory wills
§ 6246. Additional mandatory clauses for California statutory will with trust form
§ 6247. Will includes only texts of clauses as they exist when will executed
§ 6248. Application of general law

CHAPTER 7. UNIFORM TESTAMENTARY ADDITIONS TO TRUSTS ACT

§ 6300. Testamentary additions to trusts
§ 6301. Chapter does not invalidate devise made by will executed before September 17, 1965
§ 6303. Chapter citation

CHAPTER 8. TRUST FOR INSURANCE OR EMPLOYEE BENEFITS

§ 6320. Definitions
§ 6321. Designation of trustee as beneficiary, payee, or owner
§ 6322. Required provision in designator's will
§ 6323. Payment or transfer to trustee without administration
§ 6324. Effect of designator's debts
§ 6325. Jurisdiction of court
§ 6326. Applicability of Division 9
§ 6327. Appealable orders
§ 6328. Absence of qualified trustee
§ 6329. No effect on other trusts
§ 6330. Chapter as restatement and continuation of former law

CHAPTER 9. DEVISE SUBJECT TO CALIFORNIA UNIFORM TRANSFERS TO MINORS ACT

§ 6341. Devised property paid, delivered, or transferred to custodian subject to Uniform Gifts to Minors Act or Uniform Transfers to Minors Act
§ 6345. Successor or substitute custodians; compensation
§ 6347. Notice to and participation of custodian
§ 6348. Jurisdiction of court
§ 6349. Construction of chapter

CHAPTER 11. UNIFORM INTERNATIONAL WILLS ACT

§ 6380. Definitions
§ 6381. Validity of international will; application of chapter
§ 6382. Requirements for international will
§ 6383. Additional provisions concerning form of will
§ 6384. Certificate of authorized person
§ 6385. Effect of certificate
§ 6386. Revocation
§ 6387. Source and construction of this chapter
§ 6388. "Authorized person" includes California lawyer
§ 6389. Registry system
§ 6390. Chapter as restatement and continuation of former law

PART 2. INTESTATE SUCCESSION

§ 6400. Property subject to intestacy provisions
§ 6401. Intestate share of surviving spouse
§ 6402. Intestate share of heirs other than surviving spouse
§ 6402.5. Portion of decedent's estate attributable to decedent's predeceased spouse
§ 6403. Requirement that heir survive decedent
§ 6404. Escheat if no taker
§ 6406. Relatives of halfblood
§ 6407. Unborn relatives of decedent
§ 6408. Parent and child relationship
§ 6409. Advancements
§ 6410. Debt owed to decedent
§ 6411. Aliens
§ 6412. Dower and curtesy not recognized
§ 6413. Person related to decedent through two lines of relationships
§ 6414. Testator's death before January 1, 1985

PART 3. FAMILY PROTECTION

CHAPTER 1. TEMPORARY POSSESSION OF FAMILY DWELLING AND EXEMPT PROPERTY

§ 6500. Temporary right to remain in possession
§ 6501. Petition for order; notice of hearing

CHAPTER 2. SETTING ASIDE EXEMPT PROPERTY OTHER THAN FAMILY DWELLING

§ 6510. Setting aside exempt property

§ 6511. Petition for order; notice of hearing

CHAPTER 3. SETTING ASIDE PROBATE HOMESTEAD

§ 6520. Court may select and set aside probate homestead
§ 6521. Persons for whose use homestead to be set apart
§ 6522. Property out of which homestead selected
§ 6523. Factors to be considered in setting apart homestead
§ 6524. Duration of homestead; rights of parties
§ 6525. Petition; notice of hearing
§ 6526. Liability of property set apart as homestead for claims against estate
§ 6527. Modification or termination of homestead right
§ 6528. Declared homestead not affected

CHAPTER 4. FAMILY ALLOWANCE

§ 6540. Persons for whom family allowance may be made
§ 6541. Grant or modification; petition; notice of hearing
§ 6542. Time of commencement of allowance
§ 6543. Termination of allowance
§ 6544. Cost of proceeding paid as expense of administration
§ 6545. No stay on appeal if undertaking furnished

CHAPTER 5. SPOUSE OR CHILD OMITTED FROM WILL

Article 1. Omitted Spouse

§ 6560. Share of omitted spouse who married testator after execution of will
§ 6561. Circumstances where spouse does not receive share
§ 6562. Manner of satisfying share of omitted spouse

Article 2. Omitted Children

§ 6570. Share of omitted child born or adopted after execution of will
§ 6571. No share if child intentionally omitted or otherwise provided for
§ 6572. Testator's erroneous belief
§ 6573. Manner of satisfying share of omitted child

Article 3. Testator's Death Before January 1, 1985

§ 6580. Chapter not applicable where testator died before January 1, 1985

CHAPTER 6. SMALL ESTATE SET-ASIDE

§ 6600. "Decedent's estate" defined; exclusions in determining estate of the decedent or its value

§ 6601. "Minor child" defined
§ 6602. Petition to set aside estate; maximum value
§ 6603. Venue
§ 6604. Contents of petition
§ 6605. Filing of petition
§ 6606. Who may file
§ 6607. Notice of hearing
§ 6608. Inventory and appraisal
§ 6609. Court order
§ 6610. Effect of court order
§ 6611. Liability for unsecured debts of decedent
§ 6612. Order where estate not set aside
§ 6613. Attorney's fee
§ 6614. Chapter not applicable where decedent died before July 1, 1987
§ 6615. Reference to provision of former law deemed reference to provision of this chapter

PART 4. ESCHEAT OF DECEDENT'S PROPERTY

§ 6800. Escheat of property of decedent
§ 6801. Real property in this state
§ 6802. Tangible personal property customarily kept in this state
§ 6803. Tangible personal property subject to control of superior court in this state
§ 6804. Intangible personal property of decedent domiciled in this state
§ 6805. Intangible personal property subject to control of superior court in this state
§ 6806. Benefits distributable from certain trusts

DIVISION 7. ADMINISTRATION OF ESTATES OF DECEDENTS

PART 1. GENERAL PROVISIONS

CHAPTER 1. PASSAGE OF DECEDENT'S PROPERTY

§ 7000. Passage of decedent's property
§ 7001. Limitations on passage of decedent's property

CHAPTER 2. JURISDICTION AND COURTS

Article 1. Jurisdiction and Venue

§ 7050. Jurisdiction and authority of court or judge

§ 7051. Venue where decedent domiciled in this state
§ 7052. Venue where decedent not domiciled in this state

Article 2. Disqualification of Judge

§ 7060. Disqualification of judge

Article 3. Transfer of Proceedings

§ 7070. Grounds for transfer
§ 7071. Place of transfer
§ 7072. Retransfer

CHAPTER 3. RULES OF PROCEDURE

Article 1. Trial by Jury

§ 7200. Trial by jury

Article 2. New Trials

§ 7220. New trial

Article 3. Appeals

§ 7240. Appealable orders and refusals to make orders
§ 7241. Stay on appeal
§ 7242. Transitional provision

Article 3.5. Judgments and Orders

§ 7250. Effect of court authorization or approval

Article 4. Orders and Transactions Affecting Property

§ 7260. "Transaction" defined
§ 7261. Court-ordered real property transaction; statement in instrument
§ 7262. Effect of court-ordered transaction
§ 7263. Recording of order affecting title to real property

Article 5. United States as Interested Person

§ 7280. Rights of United States where federal allowance made to decedent's estate

CHAPTER 4. PUBLIC ADMINISTRATORS

Article 1. Taking Temporary Possession or Control of Property

§ 7600. Report of public employee to inform public administrator
§ 7600.5. Giving notice of death of patient to public administrator
§ 7601. Duty of public administrator to take control of property
§ 7602. Search for property, will, and instructions for disposition of remains

§ 7603. Providing information and access to public administrator
§ 7604. Subsequent appointment of another as personal representative; public administrator's expenses and fees

Article 2. Appointment as Personal Representative

§ 7620. Petition for appointment; court-ordered appointment
§ 7621. Procedure for appointment; bond fee
§ 7622. Manner of administration; compensation of public administrator
§ 7623. Additional compensation
§ 7624. Money remaining after final distribution of estate

Article 3. Deposit of Money of Estate

§ 7640. Deposit with financial institution or county treasurer
§ 7641. Withdrawals
§ 7642. Interest or dividends
§ 7643. County treasurer's duties with reference to deposit
§ 7644. Abandoned deposit in financial institution

Article 4. Summary Disposition of Small Estates

§ 7660. Estates subject to summary disposition
§ 7661. Collection and sale of property
§ 7662. Priority for payments from estate
§ 7663. Distribution of property
§ 7664. Liability for decedent's unsecured debts
§ 7665. Statement showing property and disposition; receipts and records of expenditures
§ 7666. Compensation of public administrator

PART 2. OPENING ESTATE ADMINISTRATION

CHAPTER 1. COMMENCEMENT OF PROCEEDINGS

§ 8000. Petition
§ 8001. Failure of person named executor to petition
§ 8002. Contents of petition
§ 8003. Setting and notice of hearing
§ 8004. Opposition
§ 8005. Hearing; examination and compelling attendance of witnesses; matters to be established
§ 8006. Court order
§ 8007. Determination of jurisdiction conclusive

CHAPTER 2. NOTICE OF HEARING

Article 1. Contents

§ 8100. Form of notice of hearing

Article 2. Service of Notice of Hearing

§ 8110. Time for service; manner; persons to be served
§ 8111. Service on Attorney General
§ 8112. Notice to creditors and public entity claimants
§ 8113. Notice involving foreign citizen

Article 3. Publication

§ 8120. Publication required
§ 8121. Time and manner of publication
§ 8122. Good faith compliance with publication requirement
§ 8123. Type size
§ 8124. Affidavit of publication
§ 8125. Contents of subsequent published notice

CHAPTER 3. PROBATE OF WILL

Article 1. Production of Will

§ 8200. Delivery of will
§ 8201. Order to produce will
§ 8202. Will detained outside California

Article 2. Proof of Will

§ 8220. Evidence of subscribing witness
§ 8221. Proof where no subscribing witness available
§ 8222. Holographic will
§ 8223. Lost or destroyed will
§ 8224. Preserving testimony; admissibility in subsequent proceeding
§ 8225. Admission of will to probate
§ 8226. Effect of admission of will to probate

Article 3. Contest of Will

§ 8250. Summons; persons to be served; time for responsive pleading; executor's duty to defend will
§ 8251. Responsive pleading
§ 8252. Trial
§ 8253. Evidence of execution
§ 8254. Judgment

Article 4. Revocation of Probate

§ 8270. Time to petition for revocation; eligible petitioners; contents of petition

§ 8271. Summons; service; time for responsive pleading; failure timely to respond
§ 8272. Revocation; effect of revocation

CHAPTER 4. APPOINTMENT OF PERSONAL REPRESENTATIVE

Article 1. General Provisions

§ 8400. Appointment necessary
§ 8401. Deposit of money or other property subject to withdrawal by court order only
§ 8402. Persons ineligible for appointment
§ 8403. Oath
§ 8404. Statement of duties and liabilities
§ 8405. Form of letters
§ 8406. Effect of reversal of appointment of personal representative

Article 2. Executors

§ 8420. Person named in will as executor
§ 8421. Person not named in will but apparently intended by will to be executor
§ 8422. Power conferred by will to designate executor
§ 8423. Successor trust company as executor
§ 8424. Minor named as executor
§ 8425. Court appointment of fewer than all persons named in will as executors

Article 3. Administrators With the Will Annexed

§ 8440. When appointment required
§ 8441. Priority for appointment
§ 8442. Authority of administrator with the will annexed

Article 4. Administrators

§ 8460. Appointment of administrator
§ 8461. Priority for appointment
§ 8462. Priority of relatives
§ 8463. Surviving spouse
§ 8464. Minors and incompetent persons
§ 8465. Nominee of person entitled to appointment
§ 8466. Priority of creditor
§ 8467. Equal priority
§ 8468. Failure of persons having priority to claim appointment

Article 5. Bond

§ 8480. Bond required
§ 8481. Waiver of bond
§ 8482. Amount of bond
§ 8483. Reduction of bond by deposit of assets
§ 8484. Petition to reduce amount of bond
§ 8485. Substitution or release of sureties
§ 8486. Cost of bond
§ 8487. Law governing bond
§ 8488. Statute of limitation for action against sureties on bond

Article 6. Removal from Office

§ 8500. Procedure for removal
§ 8501. Revocation of letters
§ 8502. Grounds for removal
§ 8503. Removal at request of person with higher priority
§ 8504. Subsequent probate of will
§ 8505. Contempt for disobeying court order

Article 7. Changes in Administration

§ 8520. Vacancy in office of personal representative
§ 8521. Vacancy where other personal representatives remain
§ 8522. Vacancy where no personal representatives remain
§ 8523. Interim protection of estate
§ 8524. Powers and duties of successor personal representative
§ 8525. Effect of vacancy

Article 8. Special Administrators

§ 8540. Grounds for appointment; term of office
§ 8541. Procedure for appointment
§ 8542. Issuance of letters
§ 8543. Waiver of bond
§ 8544. Special powers, duties, and obligations
§ 8545. Special administrator with powers and duties of a general personal representative
§ 8546. Termination of authority
§ 8547. Compensation of special administrator

Article 9. Nonresident Personal Representative

§ 8570. "Nonresident personal representative" defined
§ 8571. Bond of nonresident personal representative
§ 8572. Secretary of State as attorney for service
§ 8573. Statement of address

§ 8574. Manner of service
§ 8575. Proof of service
§ 8576. Effect of service; time limits for answer or hearing of motion
§ 8577. Removal from office for failure to file statement of address

PART 3. INVENTORY AND APPRAISAL

CHAPTER 1. GENERAL PROVISIONS

§ 8800. Inventory and appraisal required
§ 8801. Supplemental inventory and appraisal
§ 8802. Form of inventory and appraisal
§ 8803. Notice of filing of inventory and appraisal
§ 8804. Failure to timely file inventory and appraisal

CHAPTER 2. INVENTORY

Article 1. General Provisions

§ 8850. Contents of inventory
§ 8851. Discharge or devise of claims
§ 8852. Oath of personal representative

Article 2. Discovery of Property of Decedent

§ 8870. Citation to appear and be examined concerning decedent's property
§ 8871. Interrogatories
§ 8872. Examination
§ 8873. Citation to appear and account
§ 8874. Wrongful taking, concealment, or disposition of property in estate

CHAPTER 3. APPRAISAL

Article 1. Procedure

§ 8900. Appraisal by personal representative, probate referee, and independent expert
§ 8901. Appraisal by personal representative
§ 8902. Appraisal by probate referee
§ 8903. Waiver of appraisal by probate referee
§ 8904. Appraisal by independent expert
§ 8905. Verification of appraisal
§ 8906. Objection to appraisal
§ 8907. Fee for appraisal by personal representative
§ 8908. Appraisal report, backup data, and justification of appraisal
§ 8909. Retention of records by probate referee

Article 2. Designation and Removal of Probate Referee

§ 8920. Designation by court
§ 8921. Designation at request of personal representative
§ 8922. Discretion not to designate person as probate referee
§ 8923. Disqualification of probate referee
§ 8924. Removal of probate referee

Article 3. Time for Probate Referee Appraisal

§ 8940. Time required for appraisal or status report
§ 8941. Hearing and order

Article 4. Commission and Expenses of Probate Referee

§ 8960. Payment of commission and expenses
§ 8961. Amount of commission and expenses
§ 8963. Maximum and minimum commissions
§ 8964. Division of commission between referees

Article 5. Transitional Provision

§ 8980. Transitional provision

PART 4. CREDITOR CLAIMS

CHAPTER 1. GENERAL PROVISIONS

§ 9000. "Claim" defined
§ 9001. Notice to creditors
§ 9002. Claim requirement
§ 9003. Payment of claims
§ 9004. Application of part

CHAPTER 2. NOTICE TO CREDITORS

§ 9050. Notice required
§ 9051. Time of notice
§ 9052. Form of notice
§ 9053. Immunity of personal representative
§ 9054. When notice not required

CHAPTER 3. TIME FOR FILING CLAIMS

§ 9100. Claim period
§ 9101. Time not extended by vacancy in office
§ 9102. Where personal representative acts on claim after expiration of time
§ 9103. Late claims
§ 9104. Amended or revised claim

CHAPTER 4. FILING OF CLAIMS

§ 9150. How claim is filed
§ 9151. Documentary support of claim
§ 9152. Claim based on written instrument
§ 9153. Form for claim
§ 9154. Waiver of formal defects

CHAPTER 5. CLAIMS BY PUBLIC ENTITIES

§ 9200. Claim by public entity required
§ 9201. Claims governed by special statutes
§ 9202. Claim by Director of Health Services
§ 9203. Distribution before claim
§ 9204. Priority of claims not affected by chapter
§ 9205. Limitation on application of chapter

CHAPTER 6. ALLOWANCE AND REJECTION OF CLAIMS

§ 9250. Procedure by personal representative
§ 9251. Procedure by court
§ 9252. Where personal representative is creditor
§ 9253. Effect of statute of limitations
§ 9254. Contest of allowed and approved claims
§ 9255. Partial allowance
§ 9256. Failure of personal representative or court to act

CHAPTER 7. CLAIMS ESTABLISHED BY JUDGMENT

§ 9300. Money judgment against decedent
§ 9301. Money judgment against personal representative
§ 9302. Enforcement of nonmoney judgment
§ 9303. Property subject to execution lien
§ 9304. Converting attachment lien to judgment lien

CHAPTER 8. CLAIMS IN LITIGATION

Article 1. Claim Where No Pending Action or Proceeding

§ 9350. Application of article
§ 9351. Claim prerequisite to bringing action
§ 9352. Tolling of statute of limitations
§ 9353. Bar of rejected claims
§ 9354. Venue and procedure for action on claim

Article 2. Claim Where Action or Proceeding Pending

§ 9370. Claim prerequisite to continuing action

Article 3. Litigation Where No Claim Required

§ 9390. Claim covered by insurance
§ 9391. Enforcement of security interest

Article 4. Transitional Provision

§ 9399. Transitional provision for claims in litigation

PART 5. ESTATE MANAGEMENT

CHAPTER 1. GENERAL PROVISIONS

Article 1. Duties and Liabilities of Personal Representative

§ 9600. Duty to manage estate using ordinary care and diligence
§ 9601. Measure of liability for breach of fiduciary duty
§ 9602. Measure of liability for interest
§ 9603. Other remedies not affected
§ 9604. Enforceability of promise of personal representative personally to answer in damages or to pay debts of decedent
§ 9605. Claims against personal representative
§ 9606. Liability of personal representative who signs instrument

Article 2. Court Supervision

§ 9610. Extent of court supervision
§ 9611. Instructions from or confirmation by court
§ 9613. Order compelling personal representative to act or not to act
§ 9614. Suspension of powers of personal representative

Article 3. Summary Determination of Disputes

§ 9620. Submission of dispute to temporary judge
§ 9621. Submission of dispute to arbitration

Article 4. Joint Personal Representatives

§ 9630. Authority of joint personal representatives to act
§ 9631. Liability of joint personal representative for breach of duty by another personal representative

Article 5. Independent Administration

§ 9640. Independent administration authority not limited

Article 6. Transitional Provision

§ 9645. Matters pending on July 1, 1988; orders made or actions taken before July 1, 1988

CHAPTER 2. ESTATE MANAGEMENT GENERALLY

§ 9650. Possession and management of decedent's estate
§ 9651. Taking possession of property in good faith

§ 9652. Duty to keep cash invested
§ 9653. Duty to recover property transferred in fraud of creditors
§ 9654. Action by heirs or devisees for possession of or to quiet title to property
§ 9655. Voting rights with respect to corporate shares or memberships or property
§ 9656. Insuring estate property; insuring personal representative against liability
§ 9657. Profit or loss to the estate

CHAPTER 2.5. HIRING AND PAYING ATTORNEYS, ADVISERS, AND OTHERS

§ 9680. Authority to hire attorneys, advisers, and others
§ 9681. Compensation determined by agreement
§ 9682. Relief from limiting provision of decedent's will
§ 9683. Payment out of funds of estate
§ 9684. Court review of employment and compensation
§ 9684.5. Reimbursement of excessive compensation
§ 9685. Attorney's right to decline employment
§ 9686. Application of chapter

CHAPTER 3. DEPOSIT OF MONEY AND PERSONAL PROPERTY WITH FINANCIAL INSTITUTIONS

§ 9700. Deposit in insured account
§ 9701. Deposit of personal property with trust company
§ 9702. Deposit of securities in securities depository
§ 9703. Accounts and deposits withdrawable only upon court order
§ 9704. Direct distribution by depository
§ 9705. Interest on deposits by trust company

CHAPTER 4. INVESTMENTS AND PURCHASE OF PROPERTY

§ 9730. Investments permitted without prior court authorization
§ 9731. Investment in federal or state securities with court authorization
§ 9732. Investment of money as provided in will
§ 9733. Purchase of annuity granted in will
§ 9734. Exercise of option right
§ 9735. Purchase of securities or commodities sold short
§ 9736. Holding securities in name of nominee or in other form
§ 9737. Exercise of subscription rights

CHAPTER 5. OPERATION OF DECEDENT'S BUSINESS

§ 9760. Operation of decedent's business other than partnership
§ 9761. Account by decedent's surviving partner
§ 9762. Personal representative continuing as partner in decedent's general partnership
§ 9763. Exercise of decedent's partnership rights by personal representative

CHAPTER 6. ABANDONMENT OF TANGIBLE PERSONAL PROPERTY

§ 9780. Abandonment of tangible personal property
§ 9781. Court authorization or approval not required unless will otherwise provides
§ 9782. Notice of proposed disposition or abandonment
§ 9783. Objection to proposed disposition or abandonment
§ 9784. Restraining order
§ 9785. Notice not required where consent or waiver
§ 9786. Notice of hearing of petition for court authorization
§ 9787. Waiver of right to court review
§ 9788. Tender of possession of property to person objecting

CHAPTER 7. BORROWING, REFINANCING, AND ENCUMBERING PROPERTY

§ 9800. Borrowing money, refinancing, and encumbering property
§ 9801. Acting jointly with other owners of interests in estate property
§ 9802. Petition
§ 9803. Notice of hearing
§ 9804. Court order
§ 9805. Execution of instrument
§ 9806. Effectiveness of encumbrance
§ 9807. Deficiency in case of foreclosure or sale under security interest or deed of trust

CHAPTER 8. ACTIONS AND PROCEEDINGS BY OR AGAINST PERSONAL REPRESENTATIVE

§ 9820. Authority to sue and defend
§ 9822. Action on bond of former personal representative
§ 9823. Partition actions

CHAPTER 9. COMPROMISE OF CLAIMS AND ACTIONS; EXTENSION, RENEWAL, OR MODIFICATION OF OBLIGATIONS

§ 9830. Authority to compromise claims and actions and to extend, renew, or modify obligations
§ 9831. Compromise before time for filing creditors' claims has expired
§ 9832. Matters relating to real property
§ 9833. Compromise in excess of specified amount
§ 9834. Claim of estate against personal representative or estate attorney; debt or obligation of personal representative or estate attorney to estate
§ 9835. Wrongful death and personal injury claims
§ 9836. Court having authority to give authorization
§ 9837. Petition for court authorization; notice of hearing
§ 9838. Transfer of property to effectuate court approved compromise or settlement
§ 9839. Claim paid for less than full amount

CHAPTER 10. ACCEPTANCE OF DEED IN LIEU OF FORECLOSURE OR TRUSTEE'S SALE; GRANT OF PARTIAL SATISFACTION OR PARTIAL RECONVEYANCE

§ 9850. Acceptance of deed in lieu of foreclosure or trustee's sale
§ 9851. Grant of partial satisfaction or partial reconveyance

CHAPTER 11. CONVEYANCE OR TRANSFER OF PROPERTY CLAIMED TO BELONG TO DECEDENT OR OTHER PERSON

§ 9860. Petition for order
§ 9861. Notice of hearing
§ 9862. Continuance for preparation for hearing
§ 9864. Denial of petition if objection based on venue
§ 9865. Abatement of petition if civil action pending
§ 9866. Denial of petition if matter should be determined by civil action
§ 9867. Order
§ 9868. Effect of order; execution and effect of conveyance or transfer

CHAPTER 12. PURCHASE OF CLAIMS OR ESTATE PROPERTY BY PERSONAL REPRESENTATIVE OR PERSONAL REPRESENTATIVE'S ATTORNEY

§ 9880. Prohibition against purchase of estate property or claim against estate
§ 9881. Purchase with consent of heirs or devisees
§ 9882. Purchase where authorized by will
§ 9883. Petition for order under Section 9881 or 9882
§ 9884. Purchase pursuant to contract of decedent to sell
§ 9885. Option to purchase given in will

CHAPTER 13. DEDICATION OR CONVEYANCE TO GOVERNMENTAL ENTITY; EASEMENTS AND ACCESS RIGHTS

§ 9900. Dedication or conveyance of real property to governmental entity; dedication or conveyance of easement; conveyance or release of access rights
§ 9901. Petition; notice of hearing

CHAPTER 14. EXCHANGE OF PROPERTY

§ 9920. Court authorization for exchange
§ 9921. Petition
§ 9922. Notice of hearing
§ 9923. Error does not invalidate proceedings

CHAPTER 15. LEASES

§ 9940. Effect of including option to purchase in lease
§ 9941. Leases permitted without court authorization
§ 9942. Court authorization for lease; proposed lease that includes option to purchase
§ 9943. Petition for order
§ 9944. Notice of hearing
§ 9945. Hearing and order
§ 9946. Terms and conditions of leases
§ 9947. Maximum term of lease
§ 9948. Execution and effectiveness of lease

CHAPTER 16. GRANTING OPTION TO PURCHASE REAL PROPERTY

§ 9960. Authority to grant option
§ 9961. Petition
§ 9962. Minimum purchase price
§ 9963. Notice of hearing

§ 9964. Order
§ 9965. Expiration of record of recorded option
§ 9966. Error does not invalidate proceedings

CHAPTER 17. OPTION TO PURCHASE GIVEN IN WILL

§ 9980. Option to purchase given in will
§ 9981. Order; petition; notice of hearing
§ 9982. Protection of rights of creditors
§ 9983. Error does not invalidate proceedings

CHAPTER 18. SALES

Article 1. General Provisions

§ 10000. When estate property may be sold
§ 10001. Court order requiring sale of property
§ 10002. Directions in will as to mode of selling or property to be sold
§ 10003. Discretion of personal representative as to property to be sold and mode of selling
§ 10004. Sale of assets, whether real or personal, as a unit
§ 10005. Sale for more or less than appraised value
§ 10006. Cotenant's consent to sale

Article 2. Contract With Agent, Broker, or Auctioneer

§ 10150. Contract with agent or broker
§ 10151. Contract with auctioneer

Article 3. Compensation of Agent, Broker, or Auctioneer

§ 10160. Limitation on liability of estate
§ 10160.5. No commission where broker is purchaser
§ 10161. Compensation and fees to be in reasonable amount determined by court
§ 10162. Limitation on compensation of agent or broker producing successful overbidder
§ 10162.3. Compensation where there is no exclusive contract and sale is made to purchaser produced by agent or broker on bid returned to court or on overbid
§ 10162.5. Compensation where there is an exclusive contract and no other broker or agent is involved in sale
§ 10162.6. Exclusive contract providing that no compensation payable if sale confirmed to particular purchaser named in contract
§ 10162.7. Compensation where there is an exclusive contract and sale is made to purchaser produced by another agent or broker on bid returned to court or on overbid

§ 10163. Compensation where original bid made by purchaser not produced by agent or broker and sale made to overbidder produced by agent or broker
§ 10164. Compensation where sale made on increased bid by purchaser not produced by agent or broker
§ 10165. Sale made on increased bid by purchaser produced by agent or broker; compensation where original bid returned to court made by a purchaser produced by another agent or broker; compensation where another agent or broker holds exclusive right to sell contract
§ 10166. Condition of bid that certain amount of bid be paid to agent or broker
§ 10167. Compensation and expenses of auctioneer

Article 4. Special Provisions Applicable to Particular Types of Property

§ 10200. Sale or surrender for redemption or conversion of securities
§ 10201. Sale or withdrawal of savings accounts and mutual capital certificates
§ 10202. Sale of subscription rights
§ 10203. Sale of decedent's leasehold interest
§ 10204. Sale of decedent's partnership interest
§ 10205. Sale of decedent's chose in action
§ 10206. Sale of decedent's contract right to purchase real property
§ 10207. Sale to grazing or pasture association in conformity with the federal Consolidated Farm and Rural Development Act

Article 5. Sale of Personal Property

§ 10250. Notice of sale
§ 10251. Shortening time of notice of sale
§ 10252. Sale without notice
§ 10253. Contents of notice of sale
§ 10254. Sale at public auction
§ 10255. Private sale
§ 10256. Bids to comply with notice of sale
§ 10257. Sale for cash or on credit
§ 10258. Court order relaxing requirements for credit sale
§ 10259. Passage of title without court confirmation
§ 10260. Report of sale and petition for confirmation of sale
§ 10261. Hearing on petition for confirmation of sale
§ 10262. Overbid
§ 10263. Proof that notice of sale was given

§ 10264. Error does not invalidate proceedings

Article 6. Sale of Real Property

§ 10300. Publication of notice of sale
§ 10301. Notice of sale where property appraised at not more than $5,000
§ 10302. Shortening time of notice of sale
§ 10303. Sale without notice where will directs or authorizes sale
§ 10304. Contents of notice of sale
§ 10305. Sale at public auction
§ 10306. Private sale
§ 10307. Bids to comply with notice of sale
§ 10308. Report of sale and petition for confirmation of sale
§ 10309. Minimum price for private sale of real property
§ 10310. Hearing on petition for confirmation of sale
§ 10311. Overbid
§ 10312. Proof that notice of sale was given
§ 10313. Order confirming or vacating sale
§ 10314. Conveyance or assignment after confirmation
§ 10315. Sale on credit
§ 10316. Error does not invalidate proceedings

Article 7. Vacating Sale for Purchaser's Default; Liability of Defaulting Purchaser for Damages

§ 10350. Order vacating sale and directing resale; liability of defaulting purchaser
§ 10351. Order vacating sale and confirming sale to new high bidder

Article 8. Application of Sale Proceeds of Encumbered Property; Sale to Lienholder

§ 10360. Definitions
§ 10361. Application of purchase money on sale of encumbered property
§ 10362. Payment to clerk of court
§ 10363. Sale to lienholder

Article 9. Damages and Recovery of Property

§ 10380. Damages for neglect or misconduct of personal representative
§ 10381. Liquidated damages for fraudulent sale of real property
§ 10382. Statute of limitation for action for recovery of property

PART 6. INDEPENDENT ADMINISTRATION OF ESTATES

CHAPTER 1. GENERAL PROVISIONS

§ 10400. Citation of this part
§ 10401. "Court supervision" defined
§ 10402. "Full authority" defined
§ 10403. "Limited authority" defined
§ 10404. This part not applicable if will so provides
§ 10404.5. Hiring and paying attorney and others authorized whether or not independent administration authority granted
§ 10405. Special administrator
§ 10406. Application of part where independent administration authority granted under repealed Probate Code

CHAPTER 2. GRANTING OR REVOKING INDEPENDENT ADMINISTRATION AUTHORITY

§ 10450. Petition for order granting independent administration authority
§ 10451. Notice of hearing
§ 10452. Hearing and order
§ 10453. Amount of bond
§ 10454. Revoking or limiting independent administration authority

CHAPTER 3. ADMINISTRATION UNDER INDEPENDENT ADMINISTRATION AUTHORITY

Article 1. General Provisions

§ 10500. Administration without court supervision
§ 10501. Matters requiring court supervision
§ 10502. Powers exercisable under independent administration authority
§ 10503. Manner of sale of property under independent administration authority

Article 2. Powers Exercisable Only After Giving Notice of Proposed Action

§ 10510. Article describes powers that may be exercised only after giving notice of proposed action
§ 10511. Selling or exchanging real property
§ 10512. Selling or incorporating decedent's business
§ 10513. Abandoning tangible personal property
§ 10514. Borrowing; encumbering estate property

§ 10515. Granting option to purchase real property
§ 10516. Transferring to person given option to purchase in will
§ 10517. Completing contract of decedent to convey or transfer property
§ 10518. Determining claims to property claimed to belong to decedent or other person
§ 10519. Making a disclaimer

Article 3. Powers the Exercise of Which Requires Giving of Notice of Proposed Action Under Some Circumstances

§ 10530. Article describes powers that may in some circumstances be exercised only after giving notice of proposed action
§ 10531. Managing and controlling estate property generally
§ 10532. Entering into contracts
§ 10533. Investing money of the estate
§ 10534. Continuing operation of decedent's business
§ 10535. Paying family allowance
§ 10536. Leasing real and personal property
§ 10537. Selling or exchanging personal property
§ 10538. Granting or extending exclusive right to sell property

Article 4. Powers Exercisable Without Giving Notice of Proposed Action

§ 10550. Article describes powers that may be exercised without giving notice of proposed action
§ 10551. Powers that any personal representative may exercise without court supervision
§ 10552. Acting on claims against estate
§ 10553. Commencing and defending actions and proceedings
§ 10554. Modifying terms of obligation
§ 10555. Conveying property to effectuate a specific power
§ 10556. Paying taxes, assessments, and expenses
§ 10557. Purchasing annuity granted in will
§ 10558. Exercising option
§ 10559. Purchasing securities or commodities sold short
§ 10560. Holding securities in name of nominee or in other form
§ 10561. Exercising security subscription or conversion rights
§ 10562. Making repairs and improvements
§ 10563. Accepting deed in lieu of foreclosure or trustee's sale
§ 10564. Giving partial satisfaction of mortgage or partial reconveyance under trust deed
§ 10565. Hiring and paying attorneys, advisers, and others

CHAPTER 4. NOTICE OF PROPOSED ACTION PROCEDURE

§ 10580. When notice of proposed action required or permitted
§ 10581. Persons to whom notice must be given
§ 10582. Consent to proposed action
§ 10583. Waiver of notice
§ 10584. Revocation of consent or waiver
§ 10585. Form and contents of notice of proposed action
§ 10585.5. Estimated amount of compensation to be included in notice of proposed action; copy of contract
§ 10586. Mailing or delivery of notice
§ 10587. Delivery or mailing of objection to proposed action
§ 10588. Restraining order
§ 10589. Court supervision and notice of hearing required if personal representative has notice of objection
§ 10590. Effect of failure to object to proposed action
§ 10591. Protection of persons dealing in good faith with personal representative
§ 10592. Failure of personal representative to satisfy statutory requirements grounds for removal from office

PART 7. COMPENSATION OF PERSONAL REPRESENTATIVE

CHAPTER 1. AMOUNT OF COMPENSATION

§ 10800. Compensation for ordinary services
§ 10801. Additional compensation for extraordinary services
§ 10802. Compensation provided by decedent's will
§ 10803. Agreement for higher compensation void
§ 10804. No compensation as estate attorney unless authorized by will or court order
§ 10805. Apportionment of compensation

CHAPTER 2. ALLOWANCE OF COMPENSATION BY COURT

§ 10830. Partial allowance of compensation
§ 10831. Final compensation
§ 10832. Limitation on allowance of compensation for extraordinary services

CHAPTER 3. APPLICATION OF PART

§ 10850. Application of provisions of this part

PART 8. ACCOUNTS

CHAPTER 1. GENERAL PROVISIONS

§ 10900. Contents of account
§ 10901. Production of supporting documents
§ 10902. Procedure on account

CHAPTER 2. WHEN ACCOUNT REQUIRED

§ 10950. Court-ordered account
§ 10951. Final account
§ 10952. Account after authority terminated
§ 10953. Account where personal representative dies, absconds, or becomes incapacitated
§ 10954. When account is not required

CHAPTER 3. SETTLEMENT OF ACCOUNT

§ 11000. Notice of hearing
§ 11001. Contest of account
§ 11002. Hearing on account
§ 11003. Litigation expenses
§ 11004. Expenses of personal representative
§ 11005. Settlement of claim not properly filed

CHAPTER 4. COMPELLING ACCOUNT

§ 11050. Sanction for failure to account
§ 11051. Citation
§ 11052. Punishment for contempt

PART 9. PAYMENT OF DEBTS

CHAPTER 1. DEFINITIONS AND PRELIMINARY PROVISIONS

Article 1. Definitions

§ 11400. Application of definitions
§ 11401. Debt
§ 11402. Wage claim

Article 2. Proceedings Commenced Before July 1, 1988

§ 11405. Administration proceedings commenced before July 1, 1988

CHAPTER 2. GENERAL PROVISIONS

§ 11420. Priority for payment
§ 11421. Immediate payment of priority debts
§ 11422. Payment of debts on court order

§ 11423. Interest
§ 11424. Duty of personal representative to pay debts pursuant to court order
§ 11425. Payment of debt not due
§ 11426. Trust for installment or contingent debt
§ 11427. Disputed and contingent debts
§ 11428. Deposit for missing creditor
§ 11429. Unpaid creditor

CHAPTER 3. ALLOCATION OF DEBTS BETWEEN ESTATE AND SURVIVING SPOUSE

§ 11440. When allocation may be made
§ 11441. Petition for allocation
§ 11442. Inventory of property of surviving spouse
§ 11443. Notice of hearing
§ 11444. Allocation
§ 11445. Order implementing allocation
§ 11446. Funeral expenses and last illness expenses

PART 10. DISTRIBUTION OF ESTATE

CHAPTER 1. ORDER FOR DISTRIBUTION

Article 1. General Provisions

§ 11600. Petition for distribution
§ 11601. Notice of hearing
§ 11602. Opposition to petition
§ 11603. Hearing and order
§ 11604. Distribution to person other than beneficiary
§ 11605. Conclusiveness of order

Article 2. Preliminary Distribution

§ 11620. Time for petition
§ 11621. Order for distribution
§ 11622. Bond
§ 11623. Distribution under Independent Administration of Estates Act
§ 11624. Costs of proceeding

Article 3. Final Distribution

§ 11640. Petition and order
§ 11641. Distribution under court order
§ 11642. After-acquired or after-discovered property

CHAPTER 2. DETERMINATION OF PERSONS ENTITLED TO DISTRIBUTION

§ 11700. Petition
§ 11701. Notice of hearing
§ 11702. Responsive pleading
§ 11703. Attorney General as party
§ 11704. Hearing
§ 11705. Court order

CHAPTER 3. DISTRIBUTION OF PROPERTY IN ESTATE

§ 11750. Responsibility for distribution
§ 11751. Receipt for distributed property
§ 11752. Inventory by life tenant
§ 11753. Filing receipts and discharge

CHAPTER 4. DECEASED DISTRIBUTEE

§ 11801. Distribution despite death of beneficiary
§ 11802. Manner of distribution

CHAPTER 5. DEPOSIT WITH COUNTY TREASURER

§ 11850. When deposit with county treasurer authorized
§ 11851. Deposit of money; sale of personal property and deposit of proceeds
§ 11852. Receipt by county treasurer
§ 11853. Copy of order for distribution
§ 11854. Claim for property deposited in county treasury

CHAPTER 6. DISTRIBUTION TO STATE

§ 11900. Distribution to State of California
§ 11901. Distribution in trust for a class
§ 11902. Disposition of property distributed to state
§ 11903. Claims against property distributed to state
§ 11904. No deposit in county treasury

CHAPTER 7. PARTITION OR ALLOTMENT OF PROPERTY

§ 11950. Right to partition or allotment
§ 11951. Petition
§ 11952. Parties and notice
§ 11953. Disposition of property
§ 11954. Referees
§ 11955. Expenses

§ 11956. Effect of division

CHAPTER 8. INTEREST AND INCOME ACCRUING DURING ADMINISTRATION

§ 12000. Application of chapter
§ 12001. Rate of interest
§ 12002. Income and expenses of specific devise
§ 12003. Interest on general pecuniary devise
§ 12004. Interest on annuity
§ 12005. Interest on devise for maintenance
§ 12006. Remaining income to residuary or intestate distributees
§ 12007. Law applicable where decedent died before July 1, 1989

PART 11. CLOSING ESTATE ADMINISTRATION

CHAPTER 1. TIME FOR CLOSING ESTATE

§ 12200. Time required for closing or status report
§ 12201. Report of status of administration
§ 12202. Failure to petition or make report
§ 12203. Continuation of administration to pay family allowance
§ 12204. Failure of personal representative to comply with order
§ 12205. Sanction for failure to timely close estate
§ 12206. Testamentary limitation of time for administration

CHAPTER 2. DISCHARGE OF PERSONAL REPRESENTATIVE

§ 12250. Order of discharge
§ 12251. Discharge without administration
§ 12252. Administration after discharge

PART 12. ADMINISTRATION OF ESTATES OF MISSING PERSONS PRESUMED DEAD

§ 12400. "Missing person" defined
§ 12401. Presumption of death for purposes of administration
§ 12402. Manner of administration of missing person's estate
§ 12403. Jurisdiction of court
§ 12404. Petition for administration
§ 12405. Notice of hearing
§ 12406. Determination whether person is person presumed to be dead; search for missing person
§ 12407. Appointment of personal representative and determination of date of disappearance

§ 12408. Recovery of property by missing person upon reappearance

PART 13. NONDOMICILIARY DECEDENT

CHAPTER 1. DEFINITIONS

§ 12500. Application of definitions
§ 12501. Ancillary administration
§ 12502. Foreign nation
§ 12503. Foreign nation personal representative
§ 12504. Local personal representative
§ 12505. Nondomiciliary decedent
§ 12506. Sister state
§ 12507. Sister state personal representative

CHAPTER 2. ANCILLARY ADMINISTRATION

Article 1. Opening Ancillary Administration

§ 12510. Commencement of proceedings
§ 12511. Venue
§ 12512. Procedure
§ 12513. Preference for appointment as local personal representative

Article 2. Probate of Nondomiciliary Decedent's Will Admitted to Probate in Sister State or Foreign Nation

§ 12520. Proceedings governed by this article
§ 12521. Petition for probate of nondomiciliary decedent's will
§ 12522. Will admitted to probate in sister state
§ 12523. Will admitted to probate in foreign nation
§ 12524. Effect of admission of nondomiciliary decedent's will

Article 3. Application of General Provisions

§ 12530. Applicability of general provisions relating to estate administration

Article 4.Distribution of Property to Sister State Personal Representative

§ 12540. Order for distribution to sister state personal representative
§ 12541. Sale of real property and distribution of proceeds
§ 12542. Distribution where estate in sister state is insolvent

CHAPTER 3. COLLECTION OF PERSONAL PROPERTY OF SMALL ESTATE BY SISTER STATE PERSONAL REPRESENTATIVE WITHOUT ANCILLARY ADMINISTRATION

§ 12570. Collection of personal property of small estate without ancillary administration
§ 12571. Payment, delivery, or transfer of property to sister state personal representative
§ 12572. Action against holder of property to compel payment, delivery, or transfer
§ 12573. Liability of sister state personal representative who takes property under this chapter

CHAPTER 4. JURISDICTION OVER FOREIGN PERSONAL REPRESENTATIVE

§ 12590. Jurisdiction by act of foreign personal representative
§ 12591. Jurisdiction by act of decedent

DIVISION 8. DISPOSITION OF ESTATE WITHOUT ADMINISTRATION

PART 1. COLLECTION OR TRANSFER OF SMALL ESTATE WITHOUT ADMINISTRATION

CHAPTER 1. DEFINITIONS

§ 13000. Construction of words and phrases
§ 13002. Holder of the decedent's property
§ 13004. Particular item of property
§ 13006. Successor of the decedent

CHAPTER 2. GENERAL PROVISIONS

§ 13050. Exclusions in determining property or estate of decedent or its value
§ 13051. Authority of guardian, conservator, trustee, custodian, foreign personal representative, or attorney-in-fact
§ 13052. Date of valuation of property
§ 13053. Application of this part
§ 13054. Reference to provision of former law deemed reference to comparable provisions of Chapter 3

CHAPTER 3. AFFIDAVIT PROCEDURE FOR COLLECTION OR TRANSFER OF PERSONAL PROPERTY

§ 13100. Collection or transfer of personal property without probate
§ 13101. Furnishing affidavit or declaration
§ 13102. Presenting decedent's evidence of ownership
§ 13103. Inventory and appraisal of real property
§ 13104. Proof of identity
§ 13105. Transfer of property to successor
§ 13106. Protection of transferor from liability
§ 13106.5. Recording of affidavit or declaration where property is obligation secured by lien on real property
§ 13107. Claim against estate in probate
§ 13108. No pending probate proceeding; later probate proceeding not precluded
§ 13109. Liability for decedent's unsecured debts
§ 13110. Liability to person having superior right
§ 13111. Restitution if estate proceeding commenced
§ 13112. Limitation on liability under Sections 13109 and 13110
§ 13113. Other remedies not affected
§ 13114. Payment of costs and fees of public administrator and costs of coroner
§ 13115. Chapter does not apply to real property
§ 13116. Chapter supplemental to other procedures

CHAPTER 4. COURT ORDER DETERMINING SUCCESSION TO REAL PROPERTY

§ 13150. No pending or completed probate proceeding
§ 13151. Petition for court order determining succession to real property
§ 13152. Contents of petition; inventory and appraisal
§ 13153. Notice of hearing
§ 13154. Court order
§ 13155. Effect of order
§ 13156. Liability for decedent's unsecured debts
§ 13157. Attorney's fee

CHAPTER 5. AFFIDAVIT PROCEDURE FOR REAL PROPERTY OF SMALL VALUE

§ 13200. Filing affidavit in superior court; inventory and appraisement

§ 13201. Filing fee
§ 13202. Filing; certified copy; recording
§ 13203. Effect of recorded affidavit
§ 13204. Liability for decedent's unsecured debts
§ 13205. Liability to person having superior right
§ 13206. Restitution if estate proceeding commenced
§ 13207. Limitation on liability under Sections 13204 and 13205
§ 13208. Other remedies not affected

PART 2. PASSAGE OF PROPERTY TO SURVIVING SPOUSE WITHOUT ADMINISTRATION

CHAPTER 1. GENERAL PROVISIONS

§ 13500. Necessity of administration
§ 13501. Property subject to administration
§ 13502. Election of administration
§ 13503. Election to transfer property to trustee
§ 13504. Property held in a revocable trust
§ 13505. Application of this part
§ 13506. Reference in statute or written instrument to repealed statutory provision

CHAPTER 2. RIGHT OF SURVIVING SPOUSE TO DISPOSE OF REAL PROPERTY

§ 13540. Right of surviving spouse to dispose of real property
§ 13541. Recording notice of interest in property
§ 13542. Dispositions under former law not affected

CHAPTER 3. LIABILITY FOR DEBTS OF DECEASED SPOUSE

§ 13550. Personal liability of surviving spouse
§ 13551. Limitation on liability
§ 13552. Effect of commencement of proceedings for administration of estate of deceased spouse
§ 13553. No liability if all property administered
§ 13554. Enforcement of liability

CHAPTER 4. COLLECTION BY AFFIDAVIT OF COMPENSATION OWED TO DECEASED SPOUSE

§ 13600. Collection of salary or other compensation, not exceeding $5,000, by affidavit
§ 13601. Contents of affidavit; proof of identity
§ 13602. Payment by employer

§ 13603. Protection of employer from liability
§ 13604. Enforcement of payment
§ 13605. Rights of heirs or devisees of deceased spouse not affected
§ 13606. Other methods of collecting compensation not affected

CHAPTER 5. DETERMINATION OR CONFIRMATION OF PROPERTY PASSING OR BELONGING TO SURVIVING SPOUSE

§ 13650. Filing of petition
§ 13651. Contents of petition
§ 13652. Filing petition in pending proceeding
§ 13653. Filing petition with petition for probate proceeding
§ 13654. Effect of petition
§ 13655. Notice of hearing
§ 13656. Court order
§ 13657. Effect of court order
§ 13658. Protection of interests of creditors of business of deceased spouse
§ 13659. Inventory and appraisal
§ 13660. Attorney's fee

DIVISION 9. TRUST LAW

PART 1. GENERAL PROVISIONS

§ 15000. Short title
§ 15001. General rule concerning application of division
§ 15002. Common law as law of state
§ 15003. Effect of division on constructive and resulting trusts, fiduciary relationships, and entities and relationships not included in definition of "trust"
§ 15004. Application of division to charitable trusts

PART 2. CREATION, VALIDITY, MODIFICATION, AND TERMINATION OF TRUSTS

CHAPTER 1. CREATION AND VALIDITY OF TRUSTS

§ 15200. Methods of creating trust
§ 15201. Intention to create trust
§ 15202. Trust property
§ 15203. Trust purpose
§ 15204. Trust for indefinite or general purposes
§ 15205. Designation of beneficiary

§ 15206. Statute of Frauds
§ 15207. Oral trust of personal property
§ 15208. Consideration
§ 15209. Exception to doctrine of merger
§ 15210. Recording of trust relating to real property

CHAPTER 2. RESTRICTIONS ON VOLUNTARY AND INVOLUNTARY TRANSFERS

§ 15300. Restraint on transfer of income
§ 15301. Restraint on transfer of principal
§ 15302. Trust for support
§ 15303. Transferee or creditor cannot compel trustee to exercise discretion; liability of trustee for payment to or for beneficiary
§ 15304. Where settlor is a beneficiary
§ 15305. Claims for child or spousal support
§ 15306. Liability for public support
§ 15306.5. Rights of general creditors
§ 15307. Income in excess of amount for education and support subject to creditors' claims
§ 15308. Subsequent modification of court's order
§ 15309. Disclaimer not a transfer

CHAPTER 3. MODIFICATION AND TERMINATION OF TRUSTS

§ 15400. Presumption of revocability
§ 15401. Method of revocation by settlor; limit on modification or revocation pursuant to power of attorney
§ 15402. Power to revoke includes power to modify
§ 15403. Modification or termination of irrevocable trust by all beneficiaries
§ 15404. Modification or termination by settlor and all beneficiaries
§ 15405. Guardian ad litem
§ 15406. No conclusive presumption of fertility
§ 15407. Termination of trust; trustee's powers on termination
§ 15408. Trust with uneconomically low principal
§ 15409. Modification or termination in changed circumstances
§ 15410. Disposition of property upon termination
§ 15411. Combination of similar trusts
§ 15412. Division of trusts

PART 3. TRUSTEES AND BENEFICIARIES

CHAPTER 1. TRUSTEES

Article 1. General Provisions

§ 15600. Acceptance of trust by trustee
§ 15601. Rejection of trust; nonliability of person who rejects trust
§ 15602. Trustee's bond
§ 15603. Certificate of trustee

Article 2. Cotrustees

§ 15620. Actions by cotrustees
§ 15621. Vacancy in office of cotrustee
§ 15622. Temporary incapacity of cotrustee

Article 3. Resignation and Removal of Trustees

§ 15640. Resignation of trustee
§ 15641. Liability of resigning trustee
§ 15642. Removal of trustee
§ 15643. Vacancy in office of trustee
§ 15644. Delivery of property by former trustee upon occurrence of vacancy
§ 15645. Costs and attorney's fees in proceedings for transfer of trust to successor trust company

Article 4. Appointment of Trustees

§ 15660. Appointment of trustee to fill vacancy

Article 5. Compensation and Indemnification of Trustees

§ 15680. Trustee's compensation as provided in trust instrument; different compensation
§ 15681. Trustee's compensation where trust silent
§ 15682. Court determination of prospective compensation
§ 15683. Compensation of cotrustees
§ 15684. Repayment of trustee for expenditures
§ 15685. Trustee's lien
§ 15686. Notice of increased trustee's fee

CHAPTER 2. BENEFICIARIES

§ 15800. Limits on rights of beneficiary of revocable trust
§ 15801. Consent by beneficiary of revocable trust
§ 15802. Notice to beneficiary of revocable trust
§ 15803. Rights of holder of power of appointment or withdrawal
§ 15804. Notice in case involving future interest of beneficiary

§ 15805. Attorney General subject to limitations on rights of beneficiaries of revocable trusts

PART 4. TRUST ADMINISTRATION

CHAPTER 1. DUTIES OF TRUSTEES

Article 1. Trustee's Duties in General

§ 16000. Duty to administer trust
§ 16001. Duties of trustee of revocable trust
§ 16002. Duty of loyalty
§ 16003. Duty to deal impartially with beneficiaries
§ 16004. Duty to avoid conflict of interest
§ 16005. Duty not to undertake adverse trust
§ 16006. Duty to take control of and preserve trust property
§ 16007. Duty to make trust property productive
§ 16008. Duty to dispose of improper investments
§ 16009. Duty to keep trust property separate and identified
§ 16010. Duty to enforce claims
§ 16011. Duty to defend actions
§ 16012. Duty not to delegate
§ 16013. Duty with respect to cotrustees
§ 16014. Duty to use special skills
§ 16015. Certain actions not violations of duties

Article 2. Trustee's Standard of Care

§ 16040. Trustee's standard of care in administering trust
§ 16041. Standard of care not affected by compensation
§ 16042. Interpretation of trust terms concerning legal investments

Article 3. Trustee's Duty to Report Information and Account to Beneficiaries

§ 16060. Trustee's general duty to report information to beneficiaries
§ 16061. Duty to report information about trust on request
§ 16062. Duty to account to beneficiaries
§ 16063. Contents of account
§ 16064. Exceptions to duty to report information and account

Article 4. Duties With Regard to Discretionary Powers

§ 16080. Discretionary powers to be exercised reasonably
§ 16081. Standard for exercise of "absolute," "sole," or "uncontrolled" powers
§ 16082. Limitations on power to appoint or distribute income or principal

Article 5. Duties of Trustees of Private Foundations, Charitable Trusts, and Split-Interest Trusts

§ 16100. Definitions
§ 16101. Distribution under charitable trust or private foundation
§ 16102. Restrictions on trustees under charitable trust, private foundation, or split-interest trust
§ 16103. Exceptions applicable to split-interest trusts
§ 16104. Incorporation in trust instruments
§ 16105. Proceedings

CHAPTER 2. POWERS OF TRUSTEES

Article 1. General Provisions

§ 16200. General powers of trustee
§ 16201. Power of court to relieve trustee from restrictions on powers
§ 16202. Exercise of powers subject to trustee's duties
§ 16203. Application of rules governing trustees' powers

Article 2. Specific Powers of Trustees

§ 16220. Collecting and holding property
§ 16221. Receiving additions to trust
§ 16222. Participation in business; change in form of business
§ 16223. Investments
§ 16224. Investments in obligations of United States government
§ 16225. Deposits
§ 16226. Acquisition and disposition of property
§ 16227. Management of property
§ 16228. Encumbrances
§ 16229. Repairs and alterations of property
§ 16230. Development of land
§ 16231. Leases
§ 16232. Mineral leases
§ 16233. Options
§ 16234. Voting rights with respect to corporate shares, memberships, or property
§ 16235. Payment of calls and assessments
§ 16236. Stock subscriptions and conversions
§ 16237. Consent to change in form of business; voting trusts
§ 16238. Holding securities in name of nominee
§ 16239. Deposit of securities in securities depository
§ 16240. Insurance
§ 16241. Borrowing money

§ 16242. Payment and settlement of claims
§ 16243. Payment of taxes, trustee's compensation, and other expenses
§ 16244. Loans to beneficiary
§ 16245. Distribution to beneficiaries under legal disability
§ 16246. Nature and value of distributions
§ 16247. Hiring persons
§ 16248. Execution and delivery of instruments
§ 16249. Actions and proceedings

CHAPTER 3. REVISED UNIFORM PRINCIPAL AND INCOME ACT

§ 16300. Short title
§ 16301. Definitions
§ 16302. Duty of trustee as to receipts and expenditures
§ 16303. Income and principal
§ 16304. When right to income arises; apportionment of income
§ 16305. Income earned during administration of decedent's estate
§ 16306. Corporate distributions
§ 16307. Bonds and other obligations for payment of money
§ 16308. Business and farming operations
§ 16309. Natural resources
§ 16310. Other property subject to depletion
§ 16311. Underproductive property
§ 16312. Charges against income and principal
§ 16313. Reserve or allowance for depreciation or depletion
§ 16314. Income and interest on trust distributions
§ 16315. Application of changes made in Sections 16304 and 16305 and of Section 16314 to trust created before July 1, 1989

CHAPTER 4. LIABILITY OF TRUSTEES TO BENEFICIARIES

Article 1. Liability for Breach of Trust

§ 16400. Breach of trust
§ 16401. Trustee's liability to beneficiary for acts of agent
§ 16402. Trustee's liability to beneficiary for acts of cotrustee
§ 16403. Trustee's liability to beneficiary for acts of predecessor

Article 2. Remedies for Breach of Trust

§ 16420. Remedies for breach of trust
§ 16421. Remedies for breach exclusively in equity

Article 3. Measure of Liability for Breach of Trust

§ 16440. Measure of liability for breach of trust
§ 16441. Measure of liability for interest
§ 16442. Other remedies not affected

Article 4. Limitations and Exculpation

§ 16460. Limitations on proceedings against trustee
§ 16461. Exculpation of trustee
§ 16462. Nonliability for following instructions under revocable trust
§ 16463. Consent of beneficiary to relieve trustee of liability for breach of trust
§ 16464. Discharge of trustee's liability by release or contract
§ 16465. Discharge of trustee's liability by subsequent affirmance

PART 5. JUDICIAL PROCEEDINGS CONCERNING TRUSTS

CHAPTER 1. JURISDICTION AND VENUE

§ 17000. Subject matter jurisdiction
§ 17001. Full-power court
§ 17002. Principal place of administration of trust
§ 17003. Jurisdiction over trustees and beneficiaries
§ 17004. Basis of jurisdiction over trust, trust property, and trust parties
§ 17005. Venue
§ 17006. Jury trial

CHAPTER 2. NOTICE

§ 17100. General notice provisions apply
§ 17102. Manner of giving notice where address is unknown
§ 17105. Court order not required for notice

CHAPTER 3. PROCEEDINGS CONCERNING TRUSTS

§ 17200. Petitioners; grounds for petition
§ 17201. Commencement of proceeding
§ 17202. Dismissal of petition
§ 17203. Notice
§ 17204. Request for special notice
§ 17205. Request for copy of petition
§ 17206. Authority to make necessary orders; temporary trustee
§ 17207. Appeal
§ 17209. Intermittent judicial intervention in trust administration
§ 17210. Enforcement of beneficiary's rights under charitable trust by Attorney General

CHAPTER 4. TESTAMENTARY TRUSTS SUBJECT TO CONTINUING COURT JURISDICTION

Article 1. Administration of Testamentary Trusts Subject to Continuing Court Jurisdiction

§ 17300. Application of article
§ 17301. Continuing court jurisdiction
§ 17302. Applicable procedures
§ 17303. Effect of removal from continuing jurisdiction
§ 17304. Transfer of jurisdiction over trust to different county

Article 2. Removal of Trusts From Continuing Court Jurisdiction

§ 17350. Application of article
§ 17351. Removal of trust from continuing jurisdiction where trustee is trust company
§ 17352. Removal of trust from continuing jurisdiction where no trustee is trust company
§ 17353. Removal by trust company as successor trustee
§ 17354. Effect of change in trustees or other event on removal

CHAPTER 5. TRANSFER OF TRUST TO ANOTHER JURISDICTION

§ 17400. Application of chapter
§ 17401. Transfer of place of administration or property from California
§ 17402. Contents of petition
§ 17403. Notice and hearing
§ 17404. Order granting transfer
§ 17405. Manner of transfer; discharge of trustee

CHAPTER 6. TRANSFER OF TRUST FROM ANOTHER JURISDICTION

§ 17450. Application of chapter
§ 17451. Transfer of place of administration or property to California
§ 17452. Venue
§ 17453. Contents of petition
§ 17454. Notice and hearing
§ 17455. Order accepting transfer and appointing trustee
§ 17456. Conditional order accepting transfer
§ 17457. Administration of transferred trust; validity and construction of trust

PART 6. RIGHTS OF THIRD PERSONS

CHAPTER 1. LIABILITY OF TRUSTEE TO THIRD PERSONS

§ 18000. Personal liability of trustee to third persons on contracts
§ 18001. Personal liability of trustee arising from ownership or control of trust estate
§ 18002. Personal liability of trustee for torts
§ 18003. Liability of dissenting cotrustee to third persons
§ 18004. Assertion of claims against trust
§ 18005. Liability as between trustee and trust estate

CHAPTER 2. PROTECTION OF THIRD PERSONS

§ 18100. Protection of third person dealing with trustee
§ 18101. Application of property delivered to trustee by third person
§ 18102. Protection of third person dealing with former trustee
§ 18103. Effect on third person of omission of trust from grant of real property
§ 18104. Effect on real property transactions where beneficiary undisclosed

CHAPTER 3. RIGHTS OF CREDITORS OF SETTLOR

§ 18200. Creditor's rights against revocable trust during settlor's lifetime
§ 18201. Creditor's rights against revocable trust after settlor's death

DIVISION 10. PRORATION OF TAXES

CHAPTER 1. PRORATION OF ESTATE TAXES

Article 1. General Provisions

§ 20100. Definitions
§ 20101. Transitional provision

Article 2. Proration

§ 20110. Proration among persons interested in estate
§ 20111. Manner of proration
§ 20112. Allowance and charges for credits, deductions, interest, and other adjustments
§ 20113. Trusts and temporary interests
§ 20114. Proration of additional tax on certain qualified real property
§ 20114.5. Excess retirement accumulations
§ 20115. Proration of extended estate tax
§ 20116. Where property not in possession of personal representative
§ 20117. Reimbursement for overpayment

Article 3. Judicial Proceedings

§ 20120. Who may commence proceeding
§ 20121. Petition
§ 20122. Notice of hearing
§ 20123. Court order to effectuate proration
§ 20124. Modification of court order
§ 20125. Enforcement of out-of-state proration

CHAPTER 2. PRORATION OF TAXES ON GENERATION-SKIPPING TRANSFERS

Article 1. General Provisions

§ 20200. Definitions
§ 20201. Transitional provision

Article 2. Proration

§ 20210. Proration among transferees
§ 20211. Manner of proration
§ 20212. Allowance and charges for credits, deductions, and interest
§ 20213. Trusts and temporary interests
§ 20214. Where property not in possession of trustee
§ 20215. Reimbursement for overpayment

Article 3. Judicial Proceedings

§ 20220. Who may commence proceeding
§ 20221. Petition
§ 20222. Notice of hearing
§ 20223. Court order to effectuate proration
§ 20224. Modification of court order
§ 20225. Enforcement of out-of-state proration

DIVISION 11. CONSTRUCTION OF WILLS, TRUSTS, AND OTHER INSTRUMENTS

PART 1. GENERAL PROVISIONS

§ 21101. Division applicable to wills, trusts, and other instruments
§ 21120. Satisfaction of a pecuniary gift

PART 3. NO CONTEST CLAUSE

CHAPTER 1. GENERAL PROVISIONS

§ 21300. Definitions
§ 21301. Application of part
§ 21302. Instrument may not make contrary provision
§ 21303. Validity of no contest clause

§ 21304. Construction of no contest clause
§ 21306. Forgery or revocation
§ 21307. Interested participant

CHAPTER 2. DECLARATORY RELIEF

§ 21320. Declaratory relief authorized
§ 21321. Proper court
§ 21322. Notice of hearing

PART 4. ABATEMENT

§ 21400. Abatement subject to transferor's intent
§ 21401. Purposes for which abatement made
§ 21402. Order of abatement
§ 21403. Abatement within classes
§ 21404. No exoneration by abatement of specific gift
§ 21405. Contribution in case of abatement
§ 21406. Transitional provision

PART 5. COMPLIANCE WITH INTERNAL REVENUE CODE

CHAPTER 1. GENERAL PROVISIONS

§ 21500. "Internal Revenue Code" defined
§ 21501. Application of part
§ 21502. Effect of instrument on application of part
§ 21503. Application of formula clause to federal estate tax

CHAPTER 2. MARITAL DEDUCTION GIFTS

§ 21520. Definitions
§ 21521. Sections 21524 and 21526 not applicable to estate trust
§ 21522. Marital deduction gifts
§ 21523. Maximum marital deduction for instrument dated before September 12, 1981
§ 21524. Marital deduction gift in trust
§ 21525. Survival requirement for marital deduction gift
§ 21526. QTIP election

CHAPTER 3. CHARITABLE GIFTS

§ 21540. Charitable remainder unitrusts and annuity trusts
§ 21541. Charitable lead trusts

COMMENTS TO NEW PROBATE CODE

DIVISION 1. PRELIMINARY PROVISIONS AND DEFINITIONS

Comment. This division supersedes Division 1 (commencing with Section 1) of the repealed Probate Code. Division 1 of the repealed Probate Code was enacted upon recommendation of the California Law Revision Commission. See *Tentative Recommendation Relating to Wills and Intestate Succession,* 16 Cal. L. Revision Comm'n Reports 2301 (1982). See also *Report of Senate Committee on Judiciary on Assembly Bills 25 and 68,* 17 Cal. L. Revision Comm'n Reports 867-68 (1984). Division 1 was thereafter revised upon recommendations of the California Law Revision Commission. See *Recommendation Relating to Revision of Wills and Intestate Succession Law,* 17 Cal. L. Revision Comm'n Reports 537 (1984); *Communication of Law Revision Commission Concerning Assembly Bill 2290,* 18 Cal. L. Revision Comm'n Reports 77, 78-79 (1986); *Recommendation Relating to Preliminary Provisions and Definitions of the Probate Code,* 18 Cal. L. Revision Comm'n Reports 1807 (1986); *Recommendation Proposing the Trust Law,* 18 Cal. L. Revision Comm'n Reports 501, 779-80 (1986); *Communication from California Law Revision Commission Concerning Assembly Bill 2625,* 18 Cal. L. Revision Comm'n Reports 1743, 1745 (1986); *Communication from California Law Revision Commission Concerning Assembly Bill 2652,* 18 Cal. L. Revision Comm'n Reports 1763, 1765-66 (1986); *Comments to Conforming Revisions and Repeals,* 19 Cal. L. Revision Comm'n Reports 391, 393-94 (1988); *Comments to Conforming Revisions and Repeals,* 19 Cal. L. Revision Comm'n Reports 1031, 1041 (1988); *Communication from the California Law Revision Commission Concerning Assembly Bill 2841,* 19 Cal. L. Revision Comm'n Reports 1201, 1207-09 (1988).

PART 1. PRELIMINARY PROVISIONS

§ 1. Title of code

Comment. Section 1 continues Section 1 of the repealed Probate Code without change.

Background on Section 1 of Repealed Code

Section 1 was added by 1983 Cal. Stat. ch. 842 § 21. The section continued former Probate Code Section 1 (repealed by 1983 Cal. Stat. ch. 842 § 17). For background on the provisions of this division, see the Comment to this division under the division heading.

§ 2. Continuation of existing law; construction of provisions drawn from uniform acts

Comment. Section 2 continues Section 2 of the repealed Probate Code without change. See also Gov't Code §§ 9604 (reference made in statute, charter, or ordinance to provisions of one statute carried into another statute under circumstances in which they are required to be construed as restatements and continuations and not as new enactments), 9605 (construction of amended statutory provision).

Some of the provisions of this code are the same as or similar to provisions of uniform acts. Subdivision (b) provides a rule for interpretation of these provisions. Many of the provisions of this code are drawn from the Uniform Probate Code (1987). Some provisions are drawn from other uniform acts:

Sections 220-224—Uniform Simultaneous Death Act (1953).

Sections 260-288—Uniform Disclaimer of Transfers by Will, Intestacy or Appointment Act (1978).

Sections 260-288—Uniform Disclaimer of Transfers Under Nontestamentary Instrument Act (1978).

Sections 3900-3925—Uniform Transfers to Minors Act (1983).

Sections 6300-6303—Uniform Testamentary Additions to Trusts Act (1960).

Sections 6380-6390—Uniform International Wills Act (1977). See also Section 6387 (need for uniform interpretation of Uniform International Wills Act).

Sections 16200-16249—Uniform Trustees' Powers Act (1964).

Sections 16300-16313—Revised Uniform Principal and Income Act (1962).

A number of terms and phrases are used in the Comments to the sections of the new Probate Code (including the "Background" portion of each Comment) to indicate the sources of the new provisions and to describe how they compare with prior law. The portion of the Comment giving the background on each section of the repealed code may also use terms and phrases to indicate the source or sources of the repealed section and to describe how the repealed section compared with the prior law.

The following discussion is intended to provide guidance in interpreting the terminology most commonly used in the Comments.

(1) *Continues without change.* A new provision "continues" a former provision "without change" if the two provisions are identical or nearly so. In some cases, there may be insignificant technical differences, such as where punctuation is changed without a change in meaning. Some Comments may describe the relationship by simply stating that a new

provision "continues" or is "the same as" a former provision of the repealed Probate Code, or is "the same as" a provision of the Uniform Probate Code or another uniform act.

(2) *Continues without substantive change.* A new provision "continues" a former provision "without substantive change" if the substantive law remains the same but the language differs to an insignificant degree.

(3) *Restates without substantive change.* A new provision "restates" a former provision "without substantive change" if the substantive law remains the same but the language differs to a significant degree. Some Comments may describe the new provision as being the "same in substance."

(4) *Exceptions, additions, omissions.* If part of a former provision is "continued" or "restated," the Comment may say that the former provision is continued or restated but also note the specific differences as "exceptions to," "additions to," or "omissions from" the former provision.

(5) *Generalizes, broadens, restates in general terms.* A new provision may be described as "generalizing," "broadening," or "restating in general terms" a provision of prior law. This description means that a limited rule has been expanded to cover a broader class of cases.

(6) *Supersedes, replaces.* A provision "supersedes" or "replaces" a former provision if the new provision deals with the same subject as the former provision but treats it in a significantly different manner.

(7) *New.* A provision is described as "new" where it has no direct source in prior statutes.

(8) *Drawn from, similar to, consistent with.* A variety of terms is used to indicate a source for a new provision, typically a source other than California statutes. For example, a provision may be "drawn from" a uniform act, model code, Restatement, or the statutes of another state. In such cases, it may be useful to consult any available commentary or interpretation of the source from which the new provision is drawn for background information.

(9) *Codifies.* A Comment may state that a new provision "codifies" a case-law rule that has not previously been enacted into statutory law. A provision may also be described as codifying a Restatement rule, which may or may not represent previously existing common law in California.

(10) *Makes clear, clarifies.* A new provision may be described as "making clear" a particular rule or "clarifying" a rule as a way of emphasizing the rule, particularly if the situation under prior law was doubtful or contradictory.

(11) *Statement in Comment that section is "comparable" to another section.* A Comment may state that a provision is "comparable" to another provision. If the Comment to a section notes that another section is "comparable" that does not mean that the other section is the same or substantially the same. The statement is included in the Comment so that the statute user is alerted to the other section and can review the cases under that section for possible use in interpreting the section containing the statement in the Comment.

Background on Section 2 of Repealed Code

Section 2 was added by 1983 Cal. Stat. ch. 842 § 21 and was amended by 1987 Cal. Stat. ch. 923 § 3. Subdivision (a) of Section 2 as added in 1983 continued the substance of former Probate Code Section 2 (repealed by 1983 Cal. Stat. ch. 842 § 17). Subdivision (b) of Section 2 as added in 1983 was a new provision and recognized that some provisions of the Probate Code are the same in substance as the provisions of the Uniform Probate Code (1987). Section 2 was amended in 1987 to make nonsubstantive revisions in subdivision (a) and to revise subdivision (b) to broaden its scope to cover all uniform acts, not just the Uniform Probate Code. For background on the provisions of this division, see the Comment to this division under the division heading.

§ 3. General transitional provision

Comment. Section 3 provides general transitional rules applicable to changes in the Probate Code. The section continues the substance of Section 3 of the repealed Probate Code with revisions that make clear that the section applies both to the act which enacted the new Probate Code and to any subsequent act which changes the new code, whether the change is effectuated by amendment, addition, or repeal of a provision of the new code.

The rules stated in Section 3 are general provisions that apply absent a special rule stated in the new law. Special rules may defer or accelerate application of the new law despite the general rules stated in Section 3. See subdivision (b).

The general rule prescribed in subdivision (c) is that a new law applies immediately on its operative date to all matters, including pending proceedings. The general rule is qualified by the exceptions listed in subdivision (d) (contents, execution, and notice of papers and documents are governed by the law applicable when the paper or document was filed), subdivision (e) (orders are governed by the law applicable when the order was made, subject to any applicable modification procedures), and subdivision (f) (acts are governed by the law applicable when the act was done).

Where a new law fails to address a matter that occurred before its operative date, subdivision (g) makes clear that old law continues to govern the matter.

Because it is impractical to attempt to deal with all the possible transitional problems that may arise in the application of the new law to various circumstances, subdivision (h) provides a safety-valve that permits the court to vary the application of the new law where there would otherwise be a substantial impairment of procedure or justice. This provision is intended to apply only in the extreme and unusual case, and is not intended to excuse compliance with the basic transitional provisions simply because of minor inconveniences or minor impacts on expectations or other interests.

In addition to governing other substantive provisions, Section 3 also governs itself. It therefore becomes operative on the date the new code becomes operative and applies to provisions enacted and operative before, on, or after that date.

Background on Section 3 of Repealed Code

Section 3 was a new provision added by 1988 Cal. Stat. ch. 1199 § 24.5. For background on the provisions of this division, see the Comment to this division under the division heading. Section 3 was amended by 1989 Cal. Stat. ch. 21 § 1 to make two technical, nonsubstantive corrections in the section: (1) Subdivision (d) was revised to correct an obvious inadvertent error in language, thereby stating more accurately the intent of the subdivision, and (2) subdivision (g) was amended to add "or amendment", thereby making the subdivision complete. See *Communication from the California Law Revision Commission Concerning Assembly Bill 156*, 20 Cal. L. Revision Comm'n Reports 227, 228 (1990).

§ 4. Effect of headings in code

Comment. Section 4 continues Section 4 of the repealed Probate Code without change.

Background on Section 4 of Repealed Code

Section 4 was added by 1983 Cal. Stat. ch. 842 § 21. The section continued the substance of former Probate Code Section 4 (repealed by 1983 Cal. Stat. ch. 842 § 17). For background on the provisions of this division, see the Comment to this division under the division heading.

§ 5. Certified mail sufficient compliance with requirement of use of registered mail

Comment. Section 5 continues Section 5 of the repealed Probate Code without substantive change. For general provisions relating to mailing, see Sections 1215-1217.

Background on Section 5 of Repealed Code

Section 5 was added by 1983 Cal. Stat. ch. 842 § 21. The section was the same in substance as former Probate Code Section 5 (repealed by 1983 Cal. Stat. ch. 842 § 17). For background on the provisions of this division, see the Comment to this division under the division heading.

§ 6. Construction of code

Comment. Section 6 continues Section 6 of the repealed Probate Code without substantive change. See also the Comment to Section 2.

Background on Section 6 of Repealed Code

Section 6 was added by 1983 Cal. Stat. ch. 842 § 21. The section continued former Probate Code Section 6 (repealed by 1983 Cal. Stat. ch. 842 § 17). For background on the provisions of this division, see the Comment to this division under the division heading.

§ 7. Reference to statute includes amendments and additions

Comment. Section 7 continues Section 7 of the repealed Probate Code without change. The rule stated in Section 7 applies unless the provision or context otherwise requires. See Section 6. See also Gov't Code § 9604 (reference made in statute, charter, or ordinance to provisions of one statute carried into another statute under circumstances in which they are required to be construed as restatements and continuations and not as new enactments).

Background on Section 7 of Repealed Code

Section 7 was added by 1983 Cal. Stat. ch. 842 § 21. The section continued former Probate Code Section 7 (repealed by 1983 Cal. Stat. ch. 842 § 17). For background on the provisions of this division, see the Comment to this division under the division heading.

§ 8. Reference to division, part, chapter, article, section, or part of section

Comment. Section 8 continues Section 8 of the repealed Probate Code without change.

Background on Section 8 of Repealed Code

Section 8 was added by 1983 Cal. Stat. ch. 842 § 21 and was amended by 1987 Cal. Stat. ch. 923 § 4. The section as added in 1983 continued former Probate Code Section 8 (repealed by 1983 Cal. Stat. ch. 842 § 17). The 1987 amendment added subdivision (h) defining "subparagraph." For background on the provisions of this division, see the Comment to this division under the division heading.

§ 9. Construction of tenses

Comment. Section 9 continues Section 9 of the repealed Probate Code without change.

Background on Section 9 of Repealed Code

Section 9 was added by 1983 Cal. Stat. ch. 842 § 21. The section continued former Probate Code Section 9 (repealed by 1983 Cal. Stat. ch. 842 § 17). For background on the provisions of this division, see the Comment to this division under the division heading.

§ 10. Construction of singular and plural

Comment. Section 10 continues Section 10 of the repealed Probate Code without change.

Background on Section 10 of Repealed Code

Section 10 was added by 1983 Cal. Stat. ch. 842 § 21. The section continued former Probate Code Section 10 (repealed by 1983 Cal. Stat. ch. 842 § 17). For background on the provisions of this division, see the Comment to this division under the division heading.

§ 11. Severability of provisions

Comment. Section 11 continues Section 11 of the repealed Probate Code without change.

Background on Section 11 of Repealed Code

Section 11 was added by 1983 Cal. Stat. ch. 842 § 21. The section continued former Probate Code Section 11 (repealed by 1983 Cal. Stat. ch. 842 § 17). For background on the provisions of this division, see the Comment to this division under the division heading.

§ 12. Meaning of "shall" and "may"

Comment. Section 12 continues Section 12 of the repealed Probate Code without change.

Background on Section 12 of Repealed Code

Section 12 was a new provision added by 1983 Cal. Stat. ch. 842 § 21. For background on the provisions of this division, see the Comment to this division under the division heading.

PART 2. DEFINITIONS

§ 20. Application of definitions

Comment. Section 20 broadens Section 20 of the repealed Probate Code to make the definitions in this part applicable to the entire Probate Code. Under Section 20 of the repealed Probate Code, those definitions did not apply to Division 4 (commencing with Section 1400).

The introductory portion of Section 20 recognizes that, in a particular context, the context may require that a word or phrase used in a particular section be given a meaning different from the definition provided in this part. The introductory clause also recognizes that special definitions may be used that differ from those provided in this part. See, e.g., Sections 20100 ("person interested in the estate," "property"), 20200 ("property," "trustee").

Background on Section 20 of Repealed Code

Section 20 was added by 1983 Cal. Stat. ch. 842 § 21 and was amended by 1986 Cal. Stat. ch. 783 § 3, 1986 Cal. Stat. ch. 820 § 27.5, 1987 Cal. Stat. ch. 923 § 6, 1988 Cal. Stat. ch. 1199 § 25, and 1989 Cal. Stat. ch. 397 § 21.

Section 20 as added in 1983 was a new provision. The section was amended in 1986, 1987, 1988, and 1989 to make the definitions in this part applicable to additional portions of the Probate Code. See *Communication from California Law Revision Commission Concerning Assembly Bill 2625*, 18 Cal. L. Revision Comm'n Reports 1743, 1745 (1986) (discussing 1986 amendment); *Recommendation Relating to Preliminary Provisions and Definitions of the Probate Code*, 18 Cal. L. Revision

Comm'n Reports 1807, 1816-17 (1986) (discussing 1987 amendment); *Comments to Conforming Revisions and Repeals*, 19 Cal. L. Revision Comm'n Reports 1031, 1041 (1988) (discussing 1988 amendment); *Recommendation Relating to Multiple-Party Accounts in Financial Institutions*, 20 Cal. L. Revision Comm'n Reports 95, 159 (1990) (discussing 1989 amendment). For additional background on the provisions of this division, see the Comment to this division under the division heading.

§ 21. "Account"

Comment. Section 21 continues Section 21 of the repealed Probate Code without change. This section is comparable to Section 6-101(1) of the Uniform Probate Code (1987). As to the construction of provisions drawn from uniform acts, see Section 2. The context may require that a word or phrase used in a particular section be given a meaning different from the definition provided in this part. Also special definitions may be used for a particular portion of the code that differ from those provided in this part. See Section 20. For example, the term "account" is not used in the defined sense when it is used to refer to an accounting to the court. See, e.g., Sections 16062-16064 (trustee's duty to account).

Background on Section 21 of Repealed Code

Section 21 was a new provision added by 1983 Cal. Stat. ch. 842 § 21 and was amended by 1987 Cal. Stat. ch. 923 § 7. The 1987 amendment added a reference to a mutual capital certificate and made clear that the definition of "account" applied only to a contract of deposit of funds between a depositor and a financial institution. For background on the provisions of this division, see the Comment to this division under the division heading.

§ 22. "Account in an insured credit union"

Comment. Section 22 continues Section 22 of the repealed Probate Code without substantive change. The context may require that a word or phrase used in a particular section be given a meaning different from the definition provided in this part. Also special definitions may be used for a particular portion of the code that differ from those provided in this part. See Section 20.

Background on Section 22 of Repealed Code

Section 22 was a new provision added by 1987 Cal. Stat. ch. 923 § 9. Section 22 did not include shares guaranteed by the California Credit Union Share Guaranty Corporation or comparable insurance or guaranty under Financial Code Section 14858. Compare Section 1443 of the repealed Probate Code (not continued in the new Probate Code). Section 22 referred to a share account in a credit union, rather than to shares issued by a credit union, and thus was consistent with Section 21 ("account" defined). See also Fin. Code § 14865 (shares owned by member of credit union may be referred to as a share account). For background on the provisions of this division, see the Comment to this division under the division heading.

§ 23. "Account in an insured savings and loan association"

Comment. Section 23 continues Section 23 of the repealed Probate Code without substantive change. The context may require that a word

or phrase used in a particular section be given a meaning different from the definition provided in this part. Also special definitions may be used for a particular portion of the code that differ from those provided in this part. See Section 20.

Background on Section 23 of Repealed Code

Section 23 was a new provision added by 1987 Cal. Stat. ch. 923 § 10. See *Recommendation Relating to Preliminary Provisions and Definitions of the Probate Code*, 18 Cal. L. Revision Comm'n Reports 1807, 1818 (1986). For background on the provisions of this division, see the Comment to this division under the division heading.

§ 24. "Beneficiary"

Comment. Section 24 continues Section 24 of the repealed Probate Code without substantive change. The context may require that a word or phrase used in a particular section be given a meaning different from the definition provided in this part. Also special definitions may be used for a particular portion of the code that differ from those provided in this part. See Section 20.

Section 24 is comparable to Section 1-201(2) of the Uniform Probate Code (1987). As to the construction of provisions drawn from uniform acts, see Section 2. Successors in interest include assignees and other transferees of an interest in a donative transfer of property. Cf. Section 45 ("instrument" means a will, trust, deed, or other writing that designates a beneficiary or makes a donative transfer of property).

Subdivisions (a) and (b) define "beneficiary" for the purposes of estate administration. If a decedent's estate is partly testate and partly intestate, "beneficiary" refers to a devisee as to property passing by will and to an heir as to property passing by intestate succession. Trust beneficiaries are not included within the term as used in subdivisions (a) and (b). See Section 34 ("devisee" in the case of a devise to a trust or trustee does not include trust beneficiaries). However, a particular section relating to estate administration may refer specifically to trust beneficiaries.

Subdivisions (c) and (d) define "beneficiary" for the purposes of the Trust Law. See Sections 15000-18201.

Background on Section 24 of Repealed Code

Section 24 was a new provision added by 1983 Cal. Stat. ch. 842 § 21 and amended by 1987 Cal. Stat. ch. 923 § 11. The 1987 amendment expanded the scope of this definition to cover other donative transfers, in addition to wills and trusts. See *Recommendation Relating to Preliminary Provisions and Definitions of the Probate Code*, 18 Cal. L. Revision Comm'n Reports 1807, 1812, 1818-19 (1986). For background on the provisions of this division, see the Comment to this division under the division heading.

§ 26. "Child"

Comment. Section 26 continues Section 26 of the repealed Probate Code without change. The context may require that a word or phrase used in a particular section be given a meaning different from the definition provided in this part. Also special definitions may be used for a particular portion of the code that differ from those provided in this part. See Section 20.

Section 26 is comparable to Section 1-201(3) of the Uniform Probate Code (1987). As to the construction of provisions drawn from uniform acts, see Section 2. "Child" is limited to the persons who are entitled to take as a child by intestate succession. The definition of "child" in Section 26 applies unless the provision or context otherwise requires. See Section 20.

Although under Section 26 a stepchild or foster child is not included within the meaning of "child" only on the basis of that relationship, a stepchild or foster child may be included if the relationship began during the person's minority, continued throughout the parties' joint lifetimes, and it is established by clear and convincing evidence that the stepparent or foster parent would have adopted the person but for a legal barrier. See Section 6408. See also Sections 54 (definition of "parent"), 6152 (parent-child relationship for purposes of construing will).

Background on Section 26 of Repealed Code

Section 26 was a new provision added by 1983 Cal. Stat. ch. 842 § 21 and amended by 1984 Cal. Stat. ch. 892 § 4 and 1987 Cal. Stat. ch. 923 § 12. The 1984 amendment deleted the last clause of the section which excluded from the definition of "child" any person "who is only a stepchild, a foster child, a grandchild, or any more remote descendant." The amendment did not make a substantive change; the deleted language was omitted because it was unnecessary and was confusing. Deletion of the last clause from Section 26 made it clearer that a stepchild or foster child may be included within the definition of "child" when the requirements of Section 6408 are met. See *Report of Senate Committee on Judiciary on Assembly Bills 25 and 68*, 17 Cal. L. Revision Comm'n Reports 867 (1984); *Communication of Law Revision Commission Concerning Assembly Bill 2290*, 18 Cal. L. Revision Comm'n Reports 77, 78-79 (1986). The 1987 amendment replaced "includes" with "means." This made clear that "child" is limited to the persons who are entitled to take as a child by intestate succession. See *Recommendation Relating to Preliminary Provisions and Definitions of the Probate Code*, 18 Cal. L. Revision Comm'n Reports 1807, 1812-13, 1819 (1986). For background on the provisions of this division, see the Comment to this division under the division heading.

§ 28. "Community property"

Comment. Section 28 continues Section 28 of the repealed Probate Code without substantive change. The context may require that a word or phrase used in a particular section be given a meaning different from the definition provided in this part. Also special definitions may be used

for a particular portion of the code that differ from those provided in this part. See Section 20.

Subdivision (a) is consistent with Civil Code Sections 687 and 5110. Under subdivisions (b) and (c), community property acquired while domiciled in another community property jurisdiction is treated as community property in California even though the property might not have been community if acquired while domiciled in California. For example, property is community property under subdivision (b) if it is the income of separate property and the income of separate property is community property under the laws of the place where the spouse owning the separate property is domiciled at the time the income is earned. Thus, subdivisions (b) and (c) ensure generally comparable treatment of the property in California to that given it in the other community property jurisdiction and fills a gap in the quasi-community property law. See Section 66 ("quasi-community property" defined). Section 28 applies whether the property is acquired before or after the operative date of the section. The reference in subdivisions (b) and (c) to substantially equivalent types of marital property is intended to cover possible adoption in other jurisdictions of the Uniform Marital Property Act (1983) or other laws establishing a community property regime. See also Section 68 ("real property" defined).

Background on Section 28 of Repealed Code

Section 28 was a new provision added by 1983 Cal. Stat. ch. 842 § 21. See *Report of Senate Committee on Judiciary on Assembly Bills 25 and 68*, 17 Cal. L. Revision Comm'n Reports 867 (1984). For background on the provisions of this division, see the Comment to this division under the division heading.

§ 29. "Conservatee"

Comment. Section 29 is a new provision, not found in the general definitions of the repealed Probate Code. The section continues Section 1411 of the repealed Probate Code, but expands the coverage of the definition which applied only to Division 4 (Guardianship-Conservatorship Law) to apply to the entire Probate Code. The context may require that a word or phrase used in a particular section be given a meaning different from the definition provided in this part. Also special definitions may be used for a particular portion of the code that differ from those provided in this part. See Section 20.

§ 30. "Conservator"

Comment. Section 30 is a new provision, not found in the general definitions of the repealed Probate Code. The section continues Section 1410 of the repealed Probate Code, but expands the coverage of the definition which applied only to Division 4 (Guardianship-

Conservatorship Law) to apply to the entire Probate Code. The context may require that a word or phrase used in a particular section be given a meaning different from the definition provided in this part. Also special definitions may be used for a particular portion of the code that differ from those provided in this part. See Section 20.

§ 32. "Devise"

Comment. Section 32 continues Section 32 of the repealed Probate Code without change. This section is the same in substance as Section 1-201(7) of the Uniform Probate Code (1987). As to the construction of provisions drawn from uniform acts, see Section 2. The context may require that a word or phrase used in a particular section be given a meaning different from the definition provided in this part. Also special definitions may be used for a particular portion of the code that differ from those provided in this part. See Section 20.

Background on Section 32 of Repealed Code

Section 32 was a new provision added by 1983 Cal. Stat. ch. 842 § 21. For background on the provisions of this division, see the Comment to this division under the division heading.

§ 34. "Devisee"

Comment. Section 34 continues Section 34 of the repealed Probate Code without change. This section is the same in substance as Section 1-201(8) of the Uniform Probate Code (1987). As to the construction of provisions drawn from uniform acts, see Section 2. The context may require that a word or phrase used in a particular section be given a meaning different from the definition provided in this part. Also special definitions may be used for a particular portion of the code that differ from those provided in this part. See Section 20.

Background on Section 34 of Repealed Code

Section 34 was a new provision added by 1983 Cal. Stat. ch. 842 § 21. For background on the provisions of this division, see the Comment to this division under the division heading.

§ 36. "Dissolution of marriage"

Comment. Section 36 continues Section 36 of the repealed Probate Code without change. "Dissolution of marriage" does not include an annulment of the marriage. See Section 78 ("surviving spouse") which makes a distinction between a dissolution of marriage and an annulment of marriage. The context may require that a word or phrase used in a particular section be given a meaning different from the definition provided in this part. Also special definitions may be used for a particular portion of the code that differ from those provided in this part. See Section 20.

Background on Section 36 of Repealed Code

Section 36 was a new provision added by 1983 Cal. Stat. ch. 842 § 21. For background on the provisions of this division, see the Comment to this division under the division heading.

§ 38. "Family allowance"

Comment. Section 38 continues Section 38 of the repealed Probate Code without change. The context may require that a word or phrase used in a particular section be given a meaning different from the definition provided in this part. Also special definitions may be used for a particular portion of the code that differ from those provided in this part. See Section 20.

Background on Section 38 of Repealed Code

Section 38 was a new provision added by 1983 Cal. Stat. ch. 842 § 21. For background on the provisions of this division, see the Comment to this division under the division heading.

§ 39. "Fiduciary"

Comment. Section 39 continues Section 39 of the repealed Probate Code without change. The context may require that a word or phrase used in a particular section be given a meaning different from the definition provided in this part. Also special definitions may be used for a particular portion of the code that differ from those provided in this part. See Section 20. For provisions using the defined term, see Sections 350-388 (Fiduciaries' Wartime Substitution Law), Division 11 (commencing with Section 21101) (construction of wills, trusts, and other instruments).

Background on Section 39 of Repealed Code

Section 39 was added by 1988 Cal. Stat. ch. 1199 § 25.2. The section continued former Probate Code Section 21100(a) (repealed by 1988 Cal. Stat. ch. 1199 § 107.8) without substantive change and restated former Code of Civil Procedure Section 1700.3 without substantive change but expanded the scope of the former provisions to apply to all parts of the Probate Code to which the general definitions applied. See Section 20 (application of definitions). See also *Communication from the California Law Revision Commission Concerning Assembly Bill 2841*, 19 Cal. L. Revision Comm'n Reports 1201, 1208 (1988). For background on the provisions of this division, see the Comment to this division under the division heading.

§ 40. "Financial institution"

Comment. Section 40 continues Section 40 of the repealed Probate Code without change. This section is the same as a portion of Code of Civil Procedure Section 680.200. The context may require that a word or phrase used in a particular section be given a meaning different from the definition provided in this part. Also special definitions may be used for a particular portion of the code that differ from those provided in this part. See Section 20.

Background on Section 40 of Repealed Code

Section 40 was a new provision added by 1983 Cal. Stat. ch. 842 § 21. For background on the provisions of this division, see the Comment to this division under the division heading.

§ 42. "General personal representative"

Comment. Section 42 is new and is intended for cross-referencing purposes.

§ 44. "Heir"

Comment. Section 44 continues Section 44 of the repealed Probate Code without substantive change. The context may require that a word or phrase used in a particular section be given a meaning different from the definition provided in this part. Also, special definitions may be used for a particular portion of the code that differ from those provided in this part. See Section 20.

Section 44 is the same in substance as Section 1-201(17) of the Uniform Probate Code (1987). As to the construction of provisions drawn from uniform acts, see Section 2. See also Section 78 ("surviving spouse" defined). As to a surviving spouse's waiver of rights at death, see Sections 140-147.

Background on Section 44 of Repealed Code

Section 44 was a new provision added by 1983 Cal. Stat. ch. 842 § 21. For background on the provisions of this division, see the Comment to this division under the division heading.

§ 45. "Instrument"

Comment. Section 45 continues Section 45 of the repealed Probate Code without change. The context may require that a word or phrase used in a particular section be given a meaning different from the definition provided in this part. Also special definitions may be used for a particular portion of the code that differ from those provided in this part. See Section 20. For provisions using the defined word, see Sections 350-388 (Fiduciaries' Wartime Substitution Law), Division 11 (commencing with Section 21101) (construction of wills, trusts, and other instruments).

Background on Section 45 of Repealed Code

Section 45 was added by 1988 Cal. Stat. ch. 1199 § 25.4. The section continued former Probate Code Section 21100(b) (repealed by 1988 Cal. Stat. ch. 1199 § 107.8) without change but expanded the scope of the former provision to apply to all parts of the code to which the general definitions applied. See Section 20 (application of definitions). See also *Communication from the California Law Revision Commission Concerning Assembly Bill 2841*, 19 Cal. L. Revision Comm'n Reports 1201, 1208 (1988). For background on the provisions of this division, see the Comment to this division under the division heading.

§ 46. "Insured account in a financial institution"

Comment. Section 46 continues Section 46 of the repealed Probate Code without change. The context may require that a word or phrase used in a particular section be given a meaning different from the definition provided in this part. Also special definitions may be used for a particular portion of the code that differ from those provided in this part. See Section 20.

The final clause of Section 46 makes clear that the definition applies only to that part of an account that is insured. Thus, if a deposit in an insured account exceeds the limits of the insurance, the excess does not fall within this definition.

Background on Section 46 of Repealed Code

Section 46 was a new provision added by 1987 Cal. Stat. ch. 923 § 13. For background on the provisions of this division, see the Comment to this division under the division heading.

§ 48. "Interested person"

Comment. Section 48 continues Section 48 of the repealed Probate Code without change. This section is the same in substance as Section 1-201(20) of the Uniform Probate Code (1987). As to the construction of provisions drawn from uniform acts, see Section 2. The context may require that a word or phrase used in a particular section be given a meaning different from the definition provided in this part. Also special definitions may be used for a particular portion of the code that differ from those provided in this part. See Section 20. See also Sections 354 (defining "interested person" for purposes of the Fiduciaries' Wartime Substitution Law), 1424 (defining "interested person" for purposes of guardianship and conservatorship law).

Background on Section 48 of Repealed Code

Section 48 was a new provision added by 1983 Cal. Stat. ch. 842 § 21. For background on the provisions of this division, see the Comment to this division under the division heading.

§ 50. "Issue"

Comment. Section 50 continues Section 50 of the repealed Probate Code without change. This section is the same in substance as Section 1-201(21) of the Uniform Probate Code (1987). As to the construction of provisions drawn from uniform acts, see Section 2. See also Section 6408 (parent-child relationship for determination of rights under intestate succession). The context may require that a word or phrase used in a particular section be given a meaning different from the definition provided in this part. Also, special definitions may be used for a particular portion of the code that differ from those provided in this part. See Section 20.

Background on Section 50 of Repealed Code

Section 50 was a new provision added by 1983 Cal. Stat. ch. 842 § 21. For background on the provisions of this division, see the Comment to this division under the division heading.

§ 52. "Letters"

Comment. Section 52 continues Section 52 of the repealed Probate Code without substantive change except that the scope of subdivision (a) is expanded to cover "letters" "as it relates to a personal representative," this subdivision formerly being limited to "letters" as used in Division 7 (commencing with Section 7000).

Section 52 is drawn in part from Section 1-201(23) of the Uniform Probate Code (1987). As to the construction of provisions drawn from uniform acts, see Section 2. Special definitions may be used for a particular portion of the code that differ from those provided in this part. Also, the context may require that a word or phrase used in a particular section be given a meaning different from the definition provided in this part. See Section 20. Thus, the context of a particular section determines the types of letters included within the term as used in that section. For example, in a provision relating to exercise of a power that is not available to a special administrator, "letters" would not include letters of special administration.

Background on Section 52 of Repealed Code

Section 52 was a new provision added by 1987 Cal. Stat. ch. 923 § 14. See *Recommendation Relating to Preliminary Provisions and Definitions of the Probate Code*, 18 Cal. L. Revision Comm'n Reports 1807, 1813, 1820 (1986). Section 52 was amended by 1988 Cal. Stat. ch. 1199 § 26. The 1988 amendment added subdivision (b). See *Communication from California Law Revision Commission Concerning Assembly Bill 2841*, 19 Cal. L. Revision Comm'n Reports 1201, 1208 (1988). For background on the provisions of this division, see the Comment to this division under the division heading.

§ 54. "Parent"

Comment. Section 54 continues Section 54 of the repealed Probate Code without change. The context may require that a word or phrase used in a particular section be given a meaning different from the definition provided in this part. Also special definitions may be used for a particular portion of the code that differ from those provided in this part. See Section 20.

Section 54 is comparable to Section 1-201(28) of the Uniform Probate Code (1987). As to the construction of provisions drawn from uniform acts, see Section 2. "Parent" is limited to the persons who are entitled to take as a parent by intestate succession. See also Section 26 ("child" defined).

A stepparent or foster parent is not included within the definition of "parent" on the basis of that relationship alone. A stepparent or foster parent may be included within the definition of "parent" when the requirements of Section 6408 are met. See also Section 6152 (parent-child relationship for purpose of construing will).

Background on Section 54 of Repealed Code

Section 54 was a new provision added by 1983 Cal. Stat. ch. 842 § 21 and amended by 1984 Cal. Stat. ch. 892 § 5 and 1987 Cal. Stat. ch. 923 § 15. For background on the provisions of this division, see the Comment to this division under the division heading. See also *Communication of Law Revision Commission Concerning Assembly Bill 2290*, 18 Cal. L. Revision Comm'n Reports 77, 79 (1986).

§ 55. "Pay-on-death account" or "P.O.D. account"

Comment. Section 55 is a new provision, not found in the general definitions of the repealed Probate Code. The section adopts the definition in Section 5140. See also *Recommendation Relating to Multiple-Party Accounts in Financial Institutions,* 20 Cal. L. Revision Comm'n Reports 95, 126-27 (1990). The context may require that a word or phrase used in a particular section be given a meaning different from the definition provided in this part. Also special definitions may be used for a particular portion of the code that differ from those provided in this part. See Section 20.

§ 56. "Person"

Comment. Section 56 continues Section 56 of the repealed Probate Code without change. This section is drawn from paragraphs (27) and (29) of Section 1-201 of the Uniform Probate Code (1987). As to the construction of provisions drawn from uniform acts, see Section 2. The context may require that a word or phrase used in a particular section be given a meaning different from the definition provided in this part. Also special definitions may be used for a particular portion of the code that differ from those provided in this part. See Section 20.

Background on Section 56 of Repealed Code

Section 56 was a new provision added by 1983 Cal. Stat. ch. 842 § 21. For background on the provisions of this division, see the Comment to this division under the division heading.

§ 58. "Personal representative"; "general personal representative"

Comment. Section 58 continues Section 58 of the repealed Probate Code without change. The context may require that a word or phrase used in a particular section be given a meaning different from the definition provided in this part. Also special definitions may be used for a particular portion of the code that differ from those provided in this part. See Section 20.

Subdivision (a) is drawn from the first sentence of Section 1-201(30) of the Uniform Probate Code (1987). Subdivision (b) is drawn in part from the second sentence of Section 1-201(30) of the Uniform Probate Code (1987). As to the construction of provisions drawn from uniform acts, see Section 2. The term "general personal representative" is used in Sections 9050 (notice to creditors required), 9051 (time of notice to creditors), 9100 (claim period), 9103 (late claims), 9104 (amended or revised claim), 9154 (waiver of formal defects), 9202 (notice to Director of Health Services), and 11422 (payment of debts on court order).

Background on Section 58 of Repealed Code

Section 58 was a new provision added by 1987 Cal. Stat. ch. 923 § 17 and amended by 1988 Cal. Stat. ch. 1199 § 27. Subdivision (b) was drawn from former Probate Code Section 465 (repealed by 1988 Cal. Stat. ch. 1199 § 46) and former Probate Code Section 700 (repealed by 1987 Cal. Stat. ch. 923 § 37), and from the second sentence of Section 1-201(30) of the Uniform Probate Code (1987). As to the construction of provisions drawn from uniform acts, see Section 2. For background on the provisions of this division, see the Comment to this division under the division heading. See also *Recommendation Relating to Preliminary Provisions and Definitions of the Probate Code*, 18 Cal. L. Revision Comm'n Reports 1807, 1813, 1821 (1986). The 1988 amendment corrected terminology and a section reference. See *Recommendation Relating to Creditor Claims Against Decedent's Estate*, 19 Cal. L. Revision Comm'n Reports 299, 352 (1988); *Comments to Conforming Revisions and Repeals*, 19 Cal. L. Revision Comm'n Reports 391, 394 (1988); *Communication from California Law Revision Commission Concerning Assembly Bill 708*, 19 Cal. L. Revision Comm'n Reports 545, 546 (1988).

§ 59. "Predeceased spouse"

Comment. Section 59 continues Section 59 of the repealed Probate Code without change. The context may require that a word or phrase used in a particular section be given a meaning different from the definition provided in this part. Also special definitions may be used for a particular portion of the code that differ from those provided in this part. See Section 20.

Section 59 is consistent with Section 78 ("surviving spouse" defined). See the Comment to Section 78. Under Section 59, it is possible that the decedent may have more than one predeceased spouse. For California provisions relating to annulment of marriage, see Title 2 (commencing with Section 4400) of Part 5 of the Civil Code (judicial determination of void or voidable marriage). As to a surviving spouse's waiver of rights at death, see Sections 140-147.

Background on Section 59 of Repealed Code

Section 59 was a new provision added by 1984 Cal. Stat. ch. 892 § 6. See *Recommendation Relating to Revision of Wills and Intestate Succession Law*, 17 Cal. L. Revision Comm'n Reports 537, 546, 547-48 (1984). For background on the provisions of this division, see the Comment to this division under the division heading.

§ 60. "Probate homestead"

Comment. Section 60 continues Section 60 of the repealed Probate Code without change. The context may require that a word or phrase used in a particular section be given a meaning different from the definition provided in this part. Also special definitions may be used for a particular portion of the code that differ from those provided in this part. See Section 20.

Background on Section 60 of Repealed Code

Section 60 was a new provision added by 1983 Cal. Stat. ch. 842 § 21. For background on the provisions of this division, see the Comment to this division under the division heading.

§ 62. "Property"

Comment. Section 62 continues Section 62 of the repealed Probate Code without change. This section is the same in substance as Section 1-201(33) of the Uniform Probate Code (1987). As to the construction of provisions drawn from uniform acts, see Section 2. The context may require that a word or phrase used in a particular section be given a meaning different from the definition provided in this part. Also special definitions may be used for a particular portion of the code that differ from those provided in this part. See Section 20.

Background on Section 62 of Repealed Code

Section 62 was a new provision added by 1983 Cal. Stat. ch. 842 § 21 and amended by 1987 Cal. Stat. ch. 923 § 18. For background on the provisions of this division, see the Comment to this division under the division heading.

§ 66. "Quasi-community property"

Comment. Section 66 continues Section 66 of the repealed Probate Code without substantive change. The context may require that a word or phrase used in a particular section be given a meaning different from the definition provided in this part. Also special definitions may be used for a particular portion of the code that differ from those provided in this part. See Section 20.

Community property under the laws of another jurisdiction is classified as community rather than quasi-community property. See Section 28 ("community property" defined) and the Comment thereto. See also Section 68 ("real property" defined). For background on the definition of "quasi-community property," see *Recommendation and Study Relating to Rights of Surviving Spouse in Property Acquired by Decedent While Domiciled Elsewhere,* 1 Cal. L. Revision Comm'n Reports E-1 (1957); *Recommendation and Study Relating to Inter Vivos Marital Property Rights in Property Acquired While Domiciled Elsewhere,* 3 Cal. L. Revision Comm'n Reports I-1 (1961);

Recommendation Relating to Quasi-Community Property, 9 Cal. L. Revision Comm'n Reports 113 (1969).

Background on Section 66 of Repealed Code

Section 66 was added by 1983 Cal. Stat. ch. 842 § 21. The section continued the substance of portions of former Probate Code Section 201.5 (repealed by 1983 Cal. Stat. ch. 842 § 19), except that community property under the laws of another jurisdiction was classified by Sections 28 and 66 as community rather than quasi-community property. For background on the provisions of this division, see the Comment to this division under the division heading.

§ 68. "Real property"

Comment. Section 68 continues Section 68 of the repealed Probate Code without change. This section is consistent with the last sentence of Civil Code Section 5110. The context may require that a word or phrase used in a particular section be given a meaning different from the definition provided in this part. Also special definitions may be used for a particular portion of the code that differ from those provided in this part. See Section 20.

Background on Section 68 of Repealed Code

Section 68 was a new provision added by 1983 Cal. Stat. ch. 842 § 21. For background on the provisions of this division, see the Comment to this division under the division heading.

§ 70. "Security"

Comment. Section 70 continues Section 70 of the repealed Probate Code without change. This section is the same as Section 1-201(37) of the Uniform Probate Code (1987). As to the construction of provisions drawn from uniform acts, see Section 2. The context may require that a word or phrase used in a particular section be given a meaning different from the definition provided in this part. Also special definitions may be used for a particular portion of the code that differ from those provided in this part. See Section 20.

Background on Section 70 of Repealed Code

Section 70 was a new provision added by 1983 Cal. Stat. ch. 842 § 21. For background on the provisions of this division, see the Comment to this division under the division heading.

§ 74. "State"

Comment. Section 74 continues Section 74 of the repealed Probate Code without change. This section is the same as Section 1-201(40) of the Uniform Probate Code (1987). As to the construction of provisions drawn from uniform acts, see Section 2. The context may require that a word or phrase used in a particular section be given a meaning different from the definition provided in this part. Also special definitions may be used for a particular portion of the code that differ from those provided in this part. See Section 20.

Background on Section 74 of Repealed Code

Section 74 was a new provision added by 1983 Cal. Stat. ch. 842 § 21. For background on the provisions of this division, see the Comment to this division under the division heading.

§ 76. "Subscribing witness"

Comment. Section 76 is a new provision, not found in the general definitions of the repealed Probate Code. The requirements for a person to be a subscribing witness are stated in Section 6110. The subscribing witnesses' signatures need not be "at the end" of the will. See discussion in "Background on Section 6110 of Repealed Code," following the Comment to Section 6110.

§ 78. "Surviving spouse"

Comment. Section 78 continues Section 78 of the repealed Probate Code without change. The context may require that a word or phrase used in a particular section be given a meaning different from the definition provided in this part. Also, special definitions may be used for a particular portion of the code that differ from those provided in this part. See Section 20.

Section 78 is drawn from Section 2-802 of the Uniform Probate Code (1987). As to the construction of provisions drawn from uniform acts, see Section 2. See also Section 40 ("heir" defined). Subdivisions (b) and (c) address the problem of a divorce or annulment which is not recognized in California, and apply an estoppel principle against the surviving spouse. These provisions are consistent with prior California law. See, e.g., Spellens v. Spellens, 49 Cal. 2d 210, 317 P.2d 613 (1957) (estoppel to deny validity of marriage); Estate of Atherley, 44 Cal. App. 3d 758, 764, 119 Cal. Rptr. 41 (1975) (recognizing principle but declining to apply it). See also Sections 36 ("dissolution of marriage" defined), 59 ("predeceased spouse" defined) and the Comments to those sections. As to a surviving spouse's waiver of rights at death, see Sections 140-147. For California provisions relating to annulment of marriage, see Title 2 (commencing with Section 4400) of Part 5 of the Civil Code (judicial determination of void or voidable marriage).

Background on Section 78 of Repealed Code

Section 78 was a new provision added by 1983 Cal. Stat. ch. 842 § 21. For background on the provisions of this division, see the Comment to this division under the division heading.

§ 80. "Totten trust account"

Comment. Section 80 continues Section 80 of the repealed Probate Code without change. This section is the same in substance as Section 6-101(14) of the Uniform Probate Code (1987). As to the construction of provisions drawn from uniform acts, see Section 2. See also Section 21

("account" defined). See generally *Recommendation Relating to Multiple-Party Accounts in Financial Institutions,* 20 Cal. L. Revision Comm'n Reports 95 (1990).

The context may require that a word or phrase used in a particular section be given a meaning different from the definition provided in this part. Also special definitions may be used for a particular portion of the code that differ from those provided in this part. See Section 20.

Background on Section 80 of Repealed Code

Section 80 was a new provision added by 1983 Cal. Stat. ch. 842 § 21. For background on the provisions of this division, see the Comment to this division under the division heading.

§ 81. "Transferor"

Comment. Section 81 continues Section 81 of the repealed Probate Code without change. The context may require that a word or phrase used in a particular section be given a meaning different from the definition provided in this part. Also, special definitions may be used for a particular portion of the code that differ from those provided in this part. See Section 20.

Background on Section 81 of Repealed Code

Section 81 was added by 1988 Cal. Stat. ch. 1199 § 27.5. The section continued former Probate Code Section 21100(c) (repealed by 1988 Cal. Stat. ch. 1199 § 107.8) without change but expanded the scope of the former provision to apply to all parts of the code to which the definitions apply. See Section 20 (application of definitions). For background on the provisions of this division, see the Comment to this division under the division heading.

§ 82. "Trust"

Comment. Section 82 continues Section 82 of the repealed Probate Code without change. This section is the same in substance as Section 1-201(45) of the Uniform Probate Code (1987). As to the construction of provisions drawn from uniform acts, see Section 2. See also Sections 80 ("Totten trust account" defined), 15003(c) (application of the Trust Law to entities and relationships that are excluded from the definition of "trust" in this section).

The context may require that a word or phrase used in a particular section be given a meaning different from the definition provided in this part. Also special definitions may be used for a particular portion of the code that differ from those provided in this part. See Section 20.

Background on Section 82 of Repealed Code

Section 82 was added by 1987 Cal. Stat. ch. 128 § 5. The section restated and reorganized the provisions of former Probate Code Section 82 (added to the Probate Code by 1983 Cal. Stat. ch. 842 § 21, amended by 1984 Cal. Stat. ch. 892 § 7 and 1986 Cal. Stat. ch. 820 § 28, and repealed by 1987 Cal. Stat. ch. 128 § 4).

Subdivision (a)(1) of Section 82 restated the first part of subdivision (a) of former

Probate Code Section 82 without substantive change. The last part of subdivision (a) of former Section 82 relating to charitable trusts that are not subject to the jurisdiction of the Attorney General was omitted. For a provision concerning the application of Trust Law to charitable trusts, see Section 15004. Subdivision (a)(2) restated subdivision (b) of former Section 82 without substantive change.

Subdivision (b) restated subdivision (c) of former Section 82 without substantive change. This subdivision, like its predecessor, was drawn in part from Section 1-201(45) of the Uniform Probate Code (1987), but also included references to various entities that were listed in former Probate Code Section 1138 (repealed by 1986 Cal. Stat. ch. 820 § 31). As to the construction of provisions drawn from uniform acts, see Section 2. See also Section 15003(c) (application of the Trust Law to entities and relationships that are excluded from the definition of "trust" in this section).

For background on the provisions of this division, see the Comment to this division under the division heading. See also *Recommendation Relating to Technical Revisions in the Trust Law*, 18 Cal. L. Revision Comm'n Reports 1823, 1832-34 (1986).

§ 83. "Trust company"

Comment. Section 83 continues Section 83 of the repealed Probate Code without change. See also Section 15643 (vacancy in office of trustee), 17351-17353 (removal of trust from continuing court jurisdiction). The context may require that a word or phrase used in a particular section be given a meaning different from the definition provided in this part. Also special definitions may be used for a particular portion of the code that differ from those provided in this part. See Section 20.

Entities that may qualify to conduct a trust business in this state include state chartered commercial banks (see Fin. Code §§ 107, 1500.1) and national banking associations (see Fin. Code §§ 1502, 1503), corporations authorized to conduct a trust business (see Fin. Code § 107), trust departments of title insurance companies (see Fin. Code §§ 107, 1501; Ins. Code §§ 12392, 12393, 12395), and state and federal savings and loan associations (see Fin. Code §§ 5102, 6515). See also Fin. Code § 106 ("trust business" defined). Whether an entity has qualified to engage in and conduct a trust business in this state depends on other law. In order to fall within the definition of "trust company" in Section 83, a corporation, association, or other entity must satisfy the requirements of state or federal law that apply to the particular type of entity.

Background on Section 83 of Repealed Code

Section 83 was added by 1986 Cal. Stat. ch. 820 § 29. The section was drawn from parts of former Probate Code Sections 480 (repealed by 1988 Cal. Stat. ch. 1199 § 47) and 1120.1a (repealed by 1986 Cal. Stat. ch. 820 § 31). For background on the provisions of this division, see the Comment to this division under the division heading.

§ 84. "Trustee"

Comment. Section 84 continues Section 84 of the repealed Probate Code without change. This section is the same as Section 1-201(46) of the Uniform Probate Code (1987). As to the construction of provisions drawn from uniform acts, see Section 2. The context may require that a word or phrase used in a particular section be given a meaning different from the definition provided in this part. Also special definitions may be used for a particular portion of the code that differ from those provided in this part. See Section 20.

Background on Section 84 of Repealed Code

Section 84 was a new provision added by 1983 Cal. Stat. ch. 842 § 21. For background on the provisions of this division, see the Comment to this division under the division heading.

§ 88. "Will"

Comment. Section 88 continues Section 88 of the repealed Probate Code without change. This section is the same as Section 1-201(48) of the Uniform Probate Code (1987). As to the construction of provisions drawn from uniform acts, see Section 2. The context may require that a word or phrase used in a particular section be given a meaning different from the definition provided in this part. Also special definitions may be used for a particular portion of the code that differ from those provided in this part. See Section 20.

Background on Section 88 of Repealed Code

Section 88 was a new provision added by 1983 Cal. Stat. ch. 842 § 21. For background on the provisions of this division, see the Comment to this division under the division heading.

DIVISION 2. GENERAL PROVISIONS

PART 1. EFFECT OF DEATH OF MARRIED PERSON ON COMMUNITY AND QUASI-COMMUNITY PROPERTY

Comment. This part supersedes Part 1 (commencing with Section 100) of Division 2 of the repealed Probate Code. The superseded part was enacted upon recommendation of the California Law Revision Commission. See *Tentative Recommendation Relating to Wills and Intestate Succession,* 16 Cal. L. Revision Comm'n Reports 2301 (1982). See also *Report of Senate Committee on Judiciary on Assembly Bills 25 and 68,* 17 Cal. L. Revision Comm'n Reports 867, 868-69 (1984). Technical and substantive revisions were made as a result of a subsequent recommendation. See *Recommendation Relating to Revision of Wills and Intestate Succession Law,* 17 Cal. L. Revision Comm'n Reports 537

(1984). See also *Communication of Law Revision Commission Concerning Assembly Bill 2290,* 18 Cal. L. Revision Comm'n Reports 77, 79-84 (1986).

§ 100. Community property

Comment. Section 100 continues Section 100 of the repealed Probate Code without change. The decedent's half of the community property is subject to the testamentary disposition of the decedent (Section 6101) and, in the absence of testamentary disposition, goes to the surviving spouse (Section 6401). But see Section 103 (effect on community property where married persons die simultaneously). As to the allocation of debts between the estate and the surviving spouse, see Sections 11440-11446. As to the liability of the surviving spouse for debts of the deceased spouse chargeable against community property, see Sections 13550-13554. See also Sections 28 ("community property" defined), 104 (community property held in revocable trust). This part applies only where the decedent died on or after January 1, 1985. See Section 105. As to the application of any amendments made after that date, see Section 3.

Background on Section 100 of Repealed Code

Section 100 was added by 1983 Cal. Stat. ch. 842 § 22. Section 100 restated a portion of former Probate Code Section 201 (repealed by 1983 Cal. Stat. ch. 842 § 19) without substantive change. For background on the provisions of this part, see the Comment to this part under the part heading.

§ 101. Quasi-community property

Comment. Section 101 continues Section 101 of the repealed Probate Code without change. The decedent's half of the quasi-community property is subject to the testamentary disposition of the decedent (Section 6101) and, in the absence of testamentary disposition, goes to the surviving spouse (Section 6401). But see Section 103 (effect on quasi-community property where married persons die simultaneously). See also Section 66 ("quasi-community property" defined). As to the allocation of debts between the estate and the surviving spouse, see Sections 11440-11446. As to the liability of the surviving spouse for debts of the deceased spouse chargeable against quasi-community property, see Sections 13550-13554. This part applies only where the decedent died on or after January 1, 1985. See Section 105. As to the application of any amendments made after that date, see Section 3.

The California Law Revision Commission made a series of recommendations concerning the subject matter of this section. See *Recommendation and Study Relating to Rights of Surviving Spouse in Property Acquired by Decedent While Domiciled Elsewhere,* 1 Cal. L.

Revision Comm'n Reports E-1 (1957); *Recommendation and Study Relating to Inter Vivos Marital Property Rights in Property Acquired While Domiciled Elsewhere,* 3 Cal. L. Revision Comm'n Reports I-1 (1961); *Recommendation Relating to Quasi-Community Property,* 9 Cal. L. Revision Comm'n Reports 113 (1969).

Background on Section 101 of Repealed Code

Section 101 was added by 1983 Cal. Stat. ch. 842 § 22. Section 101 restated a portion of former Probate Code Section 201.5 (repealed by 1983 Cal. Stat. ch. 842 § 19) without substantive change. For background on the provisions of this part, see the Comment to this part under the part heading.

§ 102. Recapture by surviving spouse of certain quasi-community property

Comment. Section 102 continues Section 102 of the repealed Probate Code without change. This section provides that the property shall be restored to the decedent's estate rather than that the surviving spouse may recover it directly from the transferee. This is to make the property available to creditors of the decedent to the extent that it would have been available to them if no inter vivos transfer had been made.

The provision of Section 102 that only one-half of the property transferred is to be restored is applied when the decedent dies intestate as well as when the decedent dies testate. This is because the decedent has manifested an intention to deprive the surviving spouse of the property. The intent of the intestate decedent should be given effect to the extent he or she could have accomplished the same result by will.

Paragraph (2) of subdivision (a) provides that a transfer may be set aside only if the decedent made it without receiving in exchange a consideration of "substantial" value. Where the consideration is not substantial and the transfer is set aside, no provision is made for return of the insubstantial consideration given by the transferee when property transferred is required to be restored. It is not expected that a transfer will be set aside under the statute if the transferee gave a consideration equal to one-half or more of the value of the property received. Thus, in cases in which the transfer is set aside, the one-half which the transferee keeps will be at least equal in value to any consideration given. Paragraph (3) of subdivision (a) is drawn from Uniform Probate Code Section 2-202(1) (1987) and Idaho Code Section 15-2-202 (1979). Subdivision (b) is drawn from a portion of Uniform Probate Code Section 2-202 (1987). As to the construction of provisions drawn from uniform acts, see Section 2.

Subdivision (c) provides that all of the property restored to the estate belongs to the surviving spouse pursuant to Section 101. Such property is, in effect, the one-half which the surviving spouse could have claimed

against the decedent's will. The one-half which the transferee is permitted to retain is, in effect, the one-half which the decedent could have given to the transferee by will. The surviving spouse is entitled to all of the first half.

Section 102 is limited in application to transfers made at a time when the surviving spouse has an expectancy under Section 101—i.e., at a time when the transferor is domiciled in California. This is to avoid the application of the statute to transfers made before the transferor moved here, when the transferor could not reasonably have anticipated that the transfer would later be subjected to California law.

This part applies only where the decedent died on or after January 1, 1985. See Section 105. As to the application of any amendments made after that date, see Section 3.

The California Law Revision Commission made a recommendation which resulted in the enactment of a statutory provision (former Probate Code Section 201.8) on the subject matter of this section. See *Recommendation and Study Relating to Rights of Surviving Spouse in Property Acquired by Decedent While Domiciled Elsewhere,* 1 Cal. L. Revision Comm'n Reports E-1 (1957). With respect to Section 201.8, see the discussion, infra, under "Background on Section 102 of Repealed Code."

Background on Section 102 of Repealed Code

Section 102 was added by 1983 Cal. Stat. ch. 842 § 22. Subdivisions (a) and (b) superseded the first sentence of former Probate Code Section 201.8 (repealed by 1983 Cal. Stat. ch. 842 § 19). Subdivision (c) restated the last sentence of former Section 201.8 without substantive change.

The second sentence of former Section 201.8 which required the surviving spouse to elect to take under or against the decedent's will was not continued. Under the law as revised in 1983, the rule for quasi-community property was the same as for community property: The surviving spouse no longer was forced to an election unless the decedent's will expressly so provides or unless such a requirement should be implied to avoid thwarting the testator's apparent intent. See 7 B. Witkin, Summary of California Law *Wills and Probate* §§ 21-22, at 5542-44 (8th ed. 1974).

Paragraph (3) of subdivision (a) of Section 102 replaced the provision of former Probate Code Section 201.8 that required as a condition of recapture that the decedent had a "substantial quantum of ownership or control of the property at death."

For background on the provisions of this part, see the Comment to this part under the part heading.

§ 103. Effect on community and quasi-community property where not clear one spouse survived the other

Comment. Section 103 continues Section 103 of the repealed Probate Code without substantive change. The introductory clause recognizes that Section 224 governs the disposition of life or accident insurance benefits where one spouse is the insured and the other the beneficiary,

even if the source of the insurance premiums was community property. This section, insofar as it is the same in substance as a provision of the Uniform Simultaneous Death Act (1953), is to be so construed and interpreted as to effectuate the general purpose to make uniform the law in those states which enact that act. See Section 2 (general provision relating to construction of provisions drawn from uniform acts). See also Sections 230-234 (proceeding to determine whether one spouse survived the other). This part applies only where the decedent died on or after January 1, 1985. See Section 105. As to the application of any amendments made after that date, see Section 3.

Background on Section 103 of Repealed Code

Section 103 was added by 1983 Cal. Stat. ch. 842 § 22. The section superseded the first paragraph of former Probate Code Section 296.4 (repealed by 1983 Cal. Stat. ch. 842 § 20) and extended to quasi-community property the rule formerly applicable only to community property. For background on the provisions of this part, see the Comment to this part under the part heading.

§ 104. Community property held in certain revocable trusts

Comment. Section 104 continues Section 104 of the repealed Probate Code without change. This part applies only where the decedent died on or after January 1, 1985. See Section 105. As to the application of any amendments made after that date, see Section 3.

Background on Section 104 of Repealed Code

Section 104 was added by 1983 Cal. Stat. ch. 842 § 22 and amended by 1987 Cal. Stat. ch. 128 § 6. The section restated a portion of former Probate Code Section 206 (repealed by 1983 Cal. Stat. ch. 842 § 19) without substantive change. The 1987 amendment to Section 104 corrected a cross-reference. For background on the provisions of this part, see the Comment to this part under the part heading.

§ 105. Applicability of part

Comment. Section 105 continues Section 105 of the repealed Probate Code without substantive change. This section limits the application of Sections 100-104 to cases where the decedent died on or after January 1, 1985 (the date this part of the repealed Probate Code first became operative). As to the application of any amendments made after that date, see Section 3.

Background on Section 105 of Repealed Code

Section 105 was a new provision added by 1984 Cal. Stat. ch. 892 § 7.5. For background on the provisions of this part, see the Comment to this part under the part heading.

PART 2. SURVIVING SPOUSE'S RIGHT IN CALIFORNIA REAL PROPERTY OF NONDOMICILIARY DECEDENT

Comment. This part supersedes Part 2 (commencing with Section 120) of Division 2 of the repealed Probate Code. The superseded part was enacted upon recommendation of the California Law Revision Commission. See *Tentative Recommendation Relating to Wills and Intestate Succession,* 16 Cal. L. Revision Comm'n Reports 2301 (1982).

§ 120. Surviving spouse's right in California real property of nondomiciliary decedent

Comment. Section 120 continues Section 120 of the repealed Probate Code without substantive change. This section gives the surviving spouse the same protected interest in California as the surviving spouse would have under the law of the decedent's domicile. See also Section 68 ("real property" defined).

The California Law Revision Commission made a recommendation which resulted in the enactment of a statutory provision (former Probate Code Section 201.6, repealed by 1983 Cal. Stat. ch. 842 § 19) on the subject matter of this section. See *Recommendation and Study Relating to Rights of Surviving Spouse in Property Acquired by Decedent While Domiciled Elsewhere,* 1 Cal. L. Revision Comm'n Reports E-1 (1957).

Background on Section 120 of Repealed Code

Section 120 was added by 1983 Cal. Stat. ch. 842 § 22. The section restated former Probate Code Section 201.6 (repealed by 1983 Cal. Stat. ch. 842 § 19) without substantive change. For background on the provisions of this part, see the Comment to this part under the part heading.

PART 3. CONTRACTUAL ARRANGEMENTS RELATING TO RIGHTS AT DEATH

Comment. This part supersedes Part 3 (commencing with Section 140) of Division 2 of the repealed Probate Code. The superseded part was enacted upon recommendation of the California Law Revision Commission. See *Tentative Recommendation Relating to Wills and Intestate Succession,* 16 Cal. L. Revision Comm'n Reports 2301, 2347-51, 2375-81 (1982). See also *Report of Senate Committee on Judiciary on Assembly Bills 25 and 68,* 17 Cal. L. Revision Comm'n Reports 867, 869-70 (1984); *Communication of Law Revision Commission Concerning Assembly Bill 2290,* 18 Cal. L. Revision Comm'n Reports 77, 79-82 (1986).

CHAPTER 1. SURVIVING SPOUSE'S WAIVER OF RIGHTS

§ 140. "Waiver" defined

Comment. Section 140 continues Section 140 of the repealed Probate Code without change. This chapter has no effect on waivers, agreements, or property settlements made prior to January 1, 1985 (the date this chapter of the repealed Probate Code first became operative). See Section 147. As to the application of any amendments made after that date, see Section 3. As to premarital property agreements, see Section 147 and the Comment thereto.

Background on Section 140 of Repealed Code

Section 140 was a new provision added by 1983 Cal. Stat. ch. 842 § 22 and amended by 1984 Cal. Stat. ch. 892 § 8. The 1984 amendment made a clarifying, nonsubstantive revision. For background on the provisions of this part, see the Comment to this part under the part heading.

§ 141. Rights that may be waived

Comment. Section 141 continues Section 141 of the repealed Probate Code without substantive change. This section is drawn in part from the first sentence of Section 2-204 of the Uniform Probate Code (1987). As to the construction of provisions drawn from uniform acts, see Section 2.

Paragraphs (1) and (2) of subdivision (a) permit waiver of property, interests, or benefits that would pass to the spouse making the waiver by intestate succession or by virtue of a will of the other spouse executed before the waiver.

Paragraphs (3), (4), and (5) are the same in substance as provisions found in Section 2-204 of the Uniform Probate Code (1987) and are consistent with prior California case law. See, e.g., Estate of Howe, 81 Cal. App. 2d 95, 183 P.2d 329 (1947) (probate homestead); In re Estate of Fulton, 15 Cal. App. 2d 202, 59 P.2d 508 (1936) (exempt property); Estate of Brooks, 28 Cal. 2d 748, 171 P.2d 724 (1946) (family allowance). As to the construction of provisions drawn from uniform acts, see Section 2.

Paragraph (6) is consistent with prior California case law. See Soares v. Steidtmann, 130 Cal. App. 2d 401, 278 P.2d 953 (1955).

Paragraph (7) is comparable to the provision in Section 2-204 of the Uniform Probate Code (1987) for waiver of the elective share under the Uniform Probate Code. As to the construction of provisions drawn from uniform acts, see Section 2. Paragraph (7) is consistent with prior California case law. See 7 B. Witkin, Summary of California Law *Wills and Probate* § 20, at 5541 (8th ed. 1974).

Paragraph (8) is included to make clear that a spouse may waive the right to claim as an omitted spouse under Section 6560. Paragraph (9) is consistent with Section 8440 (waiver of right to appointment by executor).

Subdivision (b) makes clear that this chapter applies only to the waiver of the rights listed in subdivision (a). The law applicable to the waiver of other rights is not affected by this chapter. See, e.g., Civil Code §§ 5200-5317. See also Section 80 ("Totten trust account" defined). As to pay-on-death accounts, see also Division 5 (commencing with Section 5100) (multiple-party accounts in financial institutions).

This chapter has no effect on waivers, agreements, or property settlements made prior to January 1, 1985 (the date this chapter of the repealed Probate Code first became operative). See Section 147. As to the application of any amendments made after that date, see Section 3. As to premarital property agreements, see Section 147 and the Comment thereto.

Background on Section 141 of Repealed Code

Section 141 was a new provision added by 1983 Cal. Stat. ch. 842 § 22 and amended by 1987 Cal. Stat. ch. 923 § 19. The 1987 amendment revised a cross-reference to another statute and made other nonsubstantive revisions. For background on the provisions of this part, see the Comment to this part under the part heading.

§ 142. Requirement of writing and signature; enforceability; defenses.

Comment. Section 142 continues Section 142 of the repealed Probate Code without change. Subdivision (a) requires that a waiver be in writing and be signed by the surviving spouse in order to be effective under this chapter. See also Sections 143-145 (enforcement of waiver), 146 (alteration, amendment, or revocation of waiver).

Subdivisions (b) and (c) make clear that enforcement of the waiver is subject to the same defenses as enforcement of a contract, but lack of consideration is not a defense and a minor intending to marry is treated as an emancipated minor (Civil Code § 63). The surviving spouse can raise the defense of lack of capacity to contract. See Civil Code § 1556 (unsound mind or deprived of civil rights). The defense of lack of consent because of duress, menace, fraud, undue influence, or mistake (Civil Code §§ 1565-1579) also is available. But see the Comment to Section 143.

This chapter has no effect on waivers, agreements, or property settlements made prior to January 1, 1985 (the date this chapter of the repealed Probate Code first became operative). See Section 147. As to the application of any amendments made after that date, see Section 3.

As to premarital property agreements, see Section 147 and the Comment thereto.

Background on Section 142 of Repealed Code

Section 142 was a new provision added by 1983 Cal. Stat. ch. 842 § 22 and amended by 1984 Cal. Stat. ch. 892 § 9. Subdivision (a) was enacted in 1983; subdivisions (b) and (c) were added to Section 142 by the 1984 amendment. For background on the provisions of this part, see the Comment to this part under the part heading.

§ 143. Waiver enforceable as of right

Comment. Section 143 continues Section 143 of the repealed Probate Code without change. This section establishes the basic standards of enforceability for a waiver.

The court shall enforce the waiver unless the surviving spouse proves either (or both) of the following:

(1) The surviving spouse was not provided a fair and reasonable disclosure of property (absent a waiver of such disclosure after advice by independent legal counsel).

(2) The surviving spouse was not represented by independent legal counsel at the time of execution.

By satisfying the conditions of disclosure and independent counsel, the parties can have certainty that their affairs will be governed in an agreed upon manner. If these conditions are not satisfied (for example, counsel may not have been sought at all or the surviving spouse may not have been separately represented), a waiver may still be enforceable under Section 144 (waiver enforceable in discretion of court).

The disclosure required under subdivision (a)(1) includes a disclosure both of the property and of the financial obligations of the decedent. Information concerning financial obligations may be important in determining whether the rights described in Section 141 should be waived.

The introductory clause of Section 143 makes clear that enforcement of a waiver under Section 143 is subject to the same defenses as enforcement of a contract. See Section 142(c). However, the requirement of representation by independent legal counsel and disclosure or waiver of disclosure on the advice of independent legal counsel should permit enforcement of the waiver against a claim of undue influence, duress, or mistake, except where the surviving spouse lacked sound mind or there was some type of duress, mistake, or fraud that the independent counsel and disclosure requirements do not protect against. Thus, parties who want more assurance that the waiver is enforceable should obtain independent legal counsel despite the added expense. See Rothschild, *Antenuptial and Postnuptial Agreements,* in

2 California Marital Dissolution Practice § 29.2, at 1174-75, § 29.4, at 1176-77 (Cal. Cont. Ed. Bar 1983); Wolfe & Hellman, *Handling Surviving Spouse's Share of Marital Property,* in California Will Drafting Practice §§ 5.31-5.33, at 205-07 (Cal. Cont. Ed. Bar 1982). However, even if the requirements of Section 143 are not satisfied, the waiver may be enforceable under Section 144.

Subdivision (b) makes clear that the fiduciary standards normally applicable to spouses pursuant to Civil Code Section 5103 do not apply if the waiver is enforceable under Section 143.

This chapter has no effect on waivers, agreements, or property settlements made prior to January 1, 1985 (the date this chapter of the repealed Probate Code first became operative). See Section 147. As to the application of any amendments made after that date, see Section 3. As to premarital property agreements, see Section 147 and the Comment thereto.

Background on Section 143 of Repealed Code

Section 143 was a new provision added by 1983 Cal. Stat. ch. 842 § 22 and amended by 1984 Cal. Stat. ch. 892 § 10. The 1984 amendment made substantive and clarifying revisions. For background on the provisions of this part, see the Comment to this part under the part heading.

§ 144. Waiver enforceable in discretion of court

Comment. Section 144 continues Section 144 of the repealed Probate Code without change.

Under subdivision (a), a waiver that is not enforceable pursuant to Section 143 may be enforceable if it is shown that the waiver at the time of execution made a fair and reasonable disposition of the rights of the surviving spouse or the surviving spouse had, or reasonably should have had, an adequate knowledge of the property and the financial obligations of the other spouse.

Subdivision (b) provides a "safety valve" from the liberal standards of enforceability provided by subdivision (a). It permits the court to refuse to enforce all or a portion of the waiver if the court finds that enforcement would be "unconscionable" under the circumstances existing at the time enforcement is sought. Satisfaction of the standards of enforceability provided by subdivision (a) should insure in the vast majority of cases that the waiver was fairly made and properly enforceable. However, in the exceptional case, circumstances may have changed in a way that neither party may have contemplated and enforcement of the waiver in its entirety would now be unconscionable. In short, subdivision (b) provides a measure of flexibility. It should be emphasized, however, that this subdivision is not intended to apply in any but the extraordinary case and never applies where the conditions of Section 143 are met.

Subdivision (a)(2) and subdivision (c) of Section 144 make clear the extent to which the fiduciary standards normally applicable to spouses pursuant to Civil Code Section 5103 apply when the waiver is sought to be enforced under Section 144. See also Wolfe & Hellman, *Handling Surviving Spouse's Share of Marital Property,* in California Will Drafting Practice §§ 5.31-5.32, at 205-06 (Cal. Cont. Ed. Bar 1982).

The reference to Section 142 in the introductory clause of subdivision (a) makes clear that enforcement of the waiver against the surviving spouse is subject to the same defenses as enforcement of a contract. See the Comments to Sections 142 and 143.

This chapter has no effect on waivers, agreements, or property settlements made prior to January 1, 1985 (the date this chapter of the repealed Probate Code first became operative). See Section 147. As to the application of any amendments made after that date, see Section 3. As to premarital property agreements, see Section 147 and the Comment thereto.

Background on Section 144 of Repealed Code

Section 144 was a new provision added by 1983 Cal. Stat. ch. 842 § 22 and amended by 1984 Cal. Stat. ch. 892 § 11. The 1984 amendment made substantive and clarifying revisions. For background on the provisions of this part, see the Comment to this part under the part heading.

§ 145. Effect of waiver of "all rights" or complete property settlement

Comment. Section 145 continues Section 145 of the repealed Probate Code without change. This section is drawn from the second sentence of Section 2-204 of the Uniform Probate Code (1987). As to the construction of provisions drawn from uniform acts, see Section 2. Nothing in Section 145 affects or limits the waiver or manner of waiver of rights other than those mentioned in subdivision (a) of Section 141. See Section 141(b) and the Comment thereto. This chapter has no effect on waivers, agreements, or property settlements made before January 1, 1985 (the date this chapter of the repealed Probate Code first became operative). See Section 147. As to the application of any amendments made after that date, see Section 3. As to the requirements for a property settlement made on or after January 1, 1985, insofar as the settlement affects rights listed in subdivision (a) of Section 141, see Section 147. As to premarital property agreements, see Section 147 and the Comment thereto.

Background on Section 145 of Repealed Code

Section 145 was added by 1983 Cal. Stat. ch. 842 § 22. The section superseded former Probate Code Section 80 (repealed by 1983 Cal. Stat. ch. 842 § 18). For background on the provisions of this part, see the Comment to this part under the part heading.

§ 146. Alteration, amendment, or revocation of waiver

Comment. Section 146 continues Section 146 of the repealed Probate Code without change. This section prescribes the conditions that must be satisfied if the agreement to alter, amend, or revoke the waiver is to be enforceable. The provisions of Section 146 are consistent with those provided by Sections 142-144 for a waiver. Under subdivision (b), a waiver expressly may provide, for example, that it is revocable during the lifetime of the other spouse. See also, e.g., Wolfe & Hellman, *Handling Surviving Spouse's Share of Marital Property,* in California Will Drafting Practice §§ 5.34, 5.36, at 207-09 (Cal. Cont. Ed. Bar 1982).

Nothing in this chapter limits any right one spouse otherwise has to revoke a consent or election to disposition of his or her half of the community or quasi-community property under the will of the other spouse. See Section 147(d). This chapter has no effect on waivers, agreements, or property settlements made prior to January 1, 1985 (the date this chapter of the repealed Probate Code first became operative). See Section 147. As to the application of any amendments made after that date, see Section 3. As to premarital property agreements, see Section 147 and the Comment thereto.

Background on Section 146 of Repealed Code

Section 146 was added by 1983 Cal. Stat. ch. 842 § 22 and amended by 1984 Cal. Stat. ch. 892 § 12. The section was extensively revised by the 1984 amendment. For background on the provisions of this part, see the Comment to this part under the part heading.

§ 147. Validity of waivers and agreements under prior law; validity or effect of premarital property agreements; revocation of consent or election to dispose of property under will of other spouse

Comment. Section 147 continues Section 147 of the repealed Probate Code without change. Subdivision (a) makes clear that, absent a valid premarital property agreement, interspousal agreements or waivers of rights on death must satisfy the requirements of this chapter. See also Civil Code §§ 5300-5317 (Uniform Premarital Agreement Act). Under the Uniform Premarital Agreement Act, the parties to a premarital agreement may contract with respect to the disposition of property upon death, the making of a will, trust, or other arrangement to carry out the provisions of the agreement, the disposition of the death benefit from a life insurance policy, and other matters. See Civil Code § 5312. As to the requirements for execution of a premarital agreement under the Uniform Act, see Civil Code §§ 5311, 5314, 5315.

Subdivision (b) makes clear that the provisions of this chapter have no effect on waivers, agreements, or property settlements made prior to

January 1, 1985 (the date this chapter of the repealed Probate Code first became operative). As to the application of any amendments made after that date, see Section 3. See also Section 141(b) (nothing in chapter affects or limits the waiver or manner of waiver of rights other than those referred to in subdivision (a) of Section 141).

Subdivision (c) makes two things clear. First, an enforceable agreement affecting rights listed in subdivision (a) of Section 141 may be made in a valid premarital property agreement. Second, a premarital waiver of rights listed in subdivision (a) also is enforceable under this chapter if the requirements of this chapter are satisfied.

Subdivision (d) makes clear that this chapter does not limit the right of a spouse to revoke a consent or election to disposition of his or her half of the community or quasi-community property under the will of the other spouse. See Wolfe & Hellman, *Handling Surviving Spouse's Share of Marital Property,* in California Will Drafting Practice §§ 5.31-5.34, at 205-08 (Cal. Cont. Ed. Bar 1982). See also the Comment to Section 146.

Background on Section 147 of Repealed Code

Section 147 was a new provision added by 1983 Cal. Stat. ch. 842 § 22. The section was amended by 1984 Cal. Stat. ch. 892 § 13 to add subdivisions (c) and (d). For background on the provisions of this part, see the Comment to this part under the part heading.

CHAPTER 2. CONTRACTS CONCERNING WILL OR SUCCESSION

§ 150. Contract concerning will or succession

Comment. Section 150 continues Section 150 of the repealed Probate Code without change. Subdivisions (a) and (b) are the same in substance as Section 2-701 of the Uniform Probate Code (1987). As to the construction of provisions drawn from uniform acts, see Section 2. Subdivision (b) is consistent with prior case law. See Daniels v. Bridges, 123 Cal. App. 2d 585, 589, 267 P.2d 343 (1954) (joint will); Lich v. Carlin, 184 Cal. App. 2d 128, 133, 7 Cal. Rptr. 555 (1960) (mutual wills).

The introductory clause of subdivision (a) makes that subdivision applicable only to contracts made after December 31, 1984. Subdivision (c) makes clear that if the contract was made on or before December 31, 1984, the law that was applicable to the contract before January 1, 1985, will continue to apply to that contract. As to the prior law, see former subdivision (6) of Section 1624 of the Civil Code, which provided that "an agreement to devise or bequeath any property, or to make any provision for any person by will" had to be in writing and subscribed by

the party to be charged or by the party's agent. As to the application of any amendments made after that date, see Section 3.

Background on Section 150 of Repealed Code

Section 150 was added by 1983 Cal. Stat. ch. 842 § 22 and amended by 1984 Cal. Stat. ch. 892 § 14. The section superseded the last portion of subdivision (6) of Section 1624 of the Civil Code (Statute of Frauds). The 1984 amendment made a clarifying revision in subdivision (a) and added subdivision (c). For background on the provisions of this part, see the Comment to this part under the part heading.

PART 4. ESTABLISHING AND REPORTING FACT OF DEATH

CHAPTER 1. PROCEEDINGS TO ESTABLISH DEATH

Comment. This chapter provides an expeditious procedure for establishing the fact of death for the purpose of clearing title to property. See Chapter 2 (commencing with Section 210) (recording evidence of death). Other proceedings to establish the fact of death for other purposes include Health and Safety Code Sections 10550-10558 (court proceedings to establish record of birth, death, or marriage) and Probate Code Sections 8000-8577 (opening estate administration), 12400-12408 (administration of estates of missing persons presumed dead).

This chapter supersedes Chapter 1 (commencing with Section 200) of Part 4 of Division 2 of the repealed Probate Code. The superseded chapter was enacted upon recommendation of the California Law Revision Commission. See *Recommendation Relating to Recording Affidavit of Death,* 17 Cal. L. Revision Comm'n Reports 493 (1984).

§ 200. Commencement of proceedings

Comment. Section 200 continues Section 200 of the repealed Probate Code without change.

Background on Section 200 of Repealed Code

Section 200 was added by 1984 Cal. Stat. ch. 527 § 2. The section restated the first portion of former Probate Code Section 1170 (repealed by 1984 Cal. Stat. ch. 527 § 5) without substantive change. For background on the provisions of this chapter, see the Comment to this chapter under the chapter heading.

§ 201. Venue; contents of petition

Comment. Section 201 continues Section 201 of the repealed Probate Code without substantive change. The requirement of the repealed Probate Code section that the petition be verified has been omitted because this requirement is generalized in Section 1021. See also Sections 1004 (notice of pendency of proceeding), 1020-1023 (signing and verifying petition).

Background on Section 201 of Repealed Code

Section 201 was added by 1984 Cal. Stat. ch. 527 § 2. The section restated the last portion of former Probate Code Section 1170 (repealed by 1984 Cal. Stat. ch. 527 § 5) without substantive change. For background on the provisions of this chapter, see the Comment to this chapter under the chapter heading.

§ 202. Pendency of administration proceedings; combined proceedings

Comment. Section 202 continues Section 202 of the repealed Probate Code without substantive change. The requirement of the repealed Probate Code section that the petition be verified has been omitted because this requirement is generalized in Section 1021. "Personal representative" has been substituted for "executor or administrator." See Section 58 (defining "personal representative"). See also Sections 1020-1023 (signing and verifying petition). A reference to "letters" has been substituted for "letters of administration." This is a nonsubstantive change. See Section 52 (defining "letters").

Background on Section 202 of Repealed Code

Section 202 was added by 1984 Cal. Stat. ch. 527 § 2. The section restated former Probate Code Section 1171 (repealed by 1984 Cal. Stat. ch. 527 § 5) without substantive change. For background on the provisions of this chapter, see the Comment to this chapter under the chapter heading.

§ 203. Notice of hearing

Comment. Section 203 continues Section 203 of the repealed Probate Code without change. For general provisions relating to notice, see Sections 1200-1221. See also Sections 1250-1252 (request for special notice), 1260-1265 (proof of giving of notice). The notice provision of subdivision (a) does not apply to a particular notice where the notice was delivered, mailed, posted, or first published before July 1, 1991. In such a case, the applicable law in effect before July 1, 1991, continues to apply to the giving of the notice. See Section 1200(c). As to the application of any amendments made after that date, see Section 3.

Background on Section 203 of Repealed Code

Section 203 was added by 1984 Cal. Stat. ch. 527 § 2 and amended by 1987 Cal. Stat. ch. 923 § 21. The section restated former Probate Code Section 1172 (repealed by 1984 Cal. Stat. ch. 527 § 5) without substantive change. The 1987 amendment deleted the requirement that the clerk set the petition for hearing, this requirement having been generalized in former Probate Code Section 1285 (repealed by 1988 Cal. Stat. ch. 1199 § 64.5), which has been continued as Section 1041. The amendment also made the section consistent with the general notice provisions. For background on the provisions of this chapter, see the Comment to this chapter under the chapter heading.

§ 204. Admission of petition and affidavits in evidence; judgment as prima facie evidence

Comment. Section 204 continues Section 204 of the repealed Probate Code without change. The judgment establishing the fact of death does not establish the title of the person who commenced the proceedings. As to the effect of a presumption affecting the "burden of producing evidence," see Evid. Code § 604. For general provisions relating to hearings and orders, see Sections 1040-1050. The judgment may be recorded pursuant to Chapter 2 (commencing with Section 210).

Background on Section 204 of Repealed Code

Section 204 was added by 1984 Cal. Stat. ch. 527 § 2. The section restated former Probate Code Section 1174 (repealed by 1984 Cal. Stat. ch. 527 § 5) without substantive change. For background on the provisions of this chapter, see the Comment to this chapter under the chapter heading.

CHAPTER 2. RECORDING EVIDENCE OF DEATH

Comment. This chapter supersedes Chapter 2 (commencing with Section 210) of Part 4 of Division 2 of the repealed Probate Code. The superseded chapter was enacted upon recommendation of the California Law Revision Commission. See *Recommendation Relating to Recording Affidavit of Death,* 17 Cal. L. Revision Comm'n Reports 493 (1984).

§ 210. Documents which may be recorded

Comment. Section 210 continues Section 210 of the repealed Probate Code without substantive change. This section makes clear that a document establishing the death of a person is entitled to recordation. Cf. Gov't Code §§ 27280 (recordation of instrument or judgment affecting title to property), 27322 (recordation of instrument required or permitted by law to be recorded).

Subdivision (a) codified the prior practice. See, e.g., 1 A. Bowman, Ogden's Revised California Real Property Law § 7.17, at 280-81 (Cal. Cont. Ed. Bar 1974); cf. Health & Safety Code § 8628 (affidavit of death of joint tenant of cemetery plot). It is comparable to authority found in a number of jurisdictions for affidavits as to death. See, e.g., P. Basye, Clearing Land Titles § 33, at 128 (2d ed. 1970). An affidavit must be made under oath or upon penalty of perjury. Code Civ. Proc. §§ 2003, 2015.5 (affidavits). Independent authority for recordation of a death certificate may be found in Health and Safety Code Sections 10060 and 10570.

Subdivision (b) permits recording of a certified copy of a court order that determines the fact of death. Other proceedings establishing the fact of death include Health and Safety Code Sections 10550-10558 (court proceedings to establish record of birth, death, or marriage) and Probate

Code Sections 12400-12408 (administration of estates of missing persons presumed dead).

Background on Section 210 of Repealed Code

Section 210 was added by 1984 Cal. Stat. ch. 527 § 2. Subdivision (a) was new and codified the practice under prior law. Subdivision (b) continued the substance of former Probate Code Section 1175 (repealed by 1984 Cal. Stat. ch. 527 § 5) (recordation of decree establishing fact of death). For background on the provisions of this chapter, see the Comment to this chapter under the chapter heading.

§ 211. Documents subject to statutory requirements; index entry

Comment. Section 211 continues Section 211 of the repealed Probate Code without change. This section provides indexing only for the decedent and not for the person who records a document establishing the fact of death. Recordation gives notice only of the fact of death; it does not establish the claim of any person who claims an interest in the property. See Section 212 (effect of recording).

Background on Section 211 of Repealed Code

Section 211 was a new provision added by 1984 Cal. Stat. ch. 527 § 2. For background on the provisions of this chapter, see the Comment to this chapter under the chapter heading.

§ 212. Recorded document as prima facie evidence of death

Comment. Section 212 continues Section 212 of the repealed Probate Code without substantive change. This section is consistent with Section 204 (hearing and judgment) and Health and Safety Code Section 10577 (death certificate prima facie evidence of fact of death). This section is subject to express statutory provisions giving greater effect to a document that establishes the fact of the decedent's death. See, e.g., Sections 11605 (conclusive effect of order for distribution), 11705 (conclusive effect of determination of persons entitled to distribution). As to the effect of a presumption affecting the burden of producing evidence, see Evid. Code § 604.

Background on Section 212 of Repealed Code

Section 212 was a new provision added by 1984 Cal. Stat. ch. 527 § 2. For background on the provisions of this chapter, see the Comment to this chapter under the chapter heading.

CHAPTER 3. REPORTING FACT OF DEATH

Comment. This chapter supersedes Chapter 3 (commencing with Section 215) of Part 4 of Division 2 of the repealed Probate Code. The superseded chapter was enacted upon recommendation of the California Law Revision Commission. See *Recommendation Relating to Creditor Claims Against Decedent's Estate,* 19 Cal. L. Revision Comm'n Reports 299, 352 (1988).

§ 215. Notice to Director of Health Services

Comment. Section 215 continues Section 215 of the repealed Probate Code without change. This section requires a beneficiary or a person in possession of property of the decedent to give notice of the decedent's death to the Director of Health Services if the decedent received health care and related services at public expense under a statute listed in the section. Section 9202 requires the personal representative to give notice of the decedent's death to the Director of Health Services if the decedent received health care under the same circumstances.

Background on Section 215 of Repealed Code

Section 215 was added by 1987 Cal. Stat. ch. 923 § 22. The section restated subdivision (b) and a portion of subdivision (a) of former Probate Code Section 700.1 (repealed by 1987 Cal. Stat. ch. 923 § 37). For background on the provisions of this chapter, see the Comment to this chapter under the chapter heading.

PART 5. SIMULTANEOUS DEATH

Comment. This part supersedes Part 5 (commencing with Section 220) of Division 2 of the repealed Probate Code. The superseded part was enacted upon recommendation of the California Law Revision Commission. See *Tentative Recommendation Relating to Wills and Intestate Succession,* 16 Cal. L. Revision Comm'n Reports 2301, 2345-46, 2386-91, 2509-2510 (1982). See also *Report of Senate Committee on Judiciary on Assembly Bills 25 and 68,* 17 Cal. L. Revision Comm'n Reports 867, 870-71 (1984).

CHAPTER 1. GENERAL PROVISIONS

§ 220. Proof of survival by clear and convincing evidence

Comment. Section 220 continues Section 220 of the repealed Probate Code without substantive change. The introductory clause of Section 220 recognizes that other provisions of this chapter limit the application of Section 220. Section 221 provides that this chapter does not apply to cases covered by Sections 103 (community and quasi-community property), 6146 (wills), or 6403 (survival of heirs). Other provisions of this chapter provide rules that apply to particular cases. See Sections 222 (survival of beneficiaries), 223 (survival of joint tenants), 224 (survival of insurance beneficiaries). The rule provided by Section 220 may be varied by a provision in the governing instrument. See Section 221. See also Sections 230-234 (proceeding to determine whether one person survived another).

Section 226 limits the application of this chapter to cases where the person the priority of whose death is in issue died on or after January 1, 1985 (the date this chapter of the repealed Probate Code first became

operative). As to the application of any amendments made after that date, see Section 3.

Background on Section 220 of Repealed Code

Section 220 was added by 1983 Cal. Stat. ch. 842 § 22. The section superseded former Probate Code Section 296 (repealed by 1983 Cal. Stat. ch. 842 § 20) and modified the prior rule to require proof of survival by clear and convincing evidence. For background on the provisions of this part, see the Comment to this part under the part heading.

§ 221. Exceptions to applicability of chapter

Comment. Section 221 continues Section 221 of the repealed Probate Code without change. Subdivision (a) makes clear that the provisions of this chapter do not apply in cases where Section 103 (effect on community and quasi-community property where married person does not survive death of spouse), 6146 (wills), or 6403 (intestate succession) applies. Subdivision (b) provides that the distribution provision of a trust, deed, contract of insurance, or other instrument controls if it results in a different distribution of property than that provided in this chapter. Subdivision (b) uses language drawn from Section 2-601 of the Uniform Probate Code (1987) and includes the substance of the 1953 revision of Section 6 of the Uniform Simultaneous Death Act (1983). As to the construction of provisions drawn from uniform acts, see Section 2.

Section 226 limits the application of this chapter to cases where the person the priority of whose death is in issue died on or after January 1, 1985 (the date this chapter of the repealed Probate Code first became operative). As to the application of any amendments made after that date, see Section 3.

Background on Section 221 of Repealed Code

Section 221 was added by 1983 Cal. Stat. ch. 842 § 22. Subdivision (a) was new. Subdivision (b) continued the substance of former Probate Code Section 296.6 (repealed by 1983 Cal. Stat. ch. 842 § 20) but omitted the reference to "wills" (will now being covered by Section 6146), substituted "trust" for "living trusts," added language drawn from Section 2-601 of the Uniform Probate Code (1987), and included the substance of the 1953 revision of Section 6 of the Uniform Simultaneous Death Act (1983). As to the construction of provisions drawn from uniform acts, see Section 2. The 1953 revision, which had not previously been adopted in California, inserted the phrase "or any other situation" and added the clause which appeared as the last portion of clause (2) of subdivision (b) of Section 221. For background on the provisions of this part, see the Comment to this part under the part heading.

§ 222. Survival of beneficiaries

Comment. Section 222 continues Section 222 of the repealed Probate Code without substantive change. Subdivision (a) is drawn from the first sentence of Section 2 of the Uniform Simultaneous Death Act (1983), as Section 2 was revised in 1953. As to the construction of provisions

drawn from uniform acts, see Section 2. See also Sections 221 (provision of governing instrument prevails), 230-234 (proceeding to determine whether one person survived another). For the definition of "beneficiary," see Section 24.

Section 226 limits the application of this chapter to cases where the person the priority of whose death is in issue died on or after January 1, 1985 (the date this chapter of the repealed Probate Code first became operative). As to the application of any amendments made after that date, see Section 3.

Background on Section 222 of Repealed Code

Section 222 was added by 1983 Cal. Stat. ch. 842 § 22. Subdivision (a) was new. Subdivision (b) superseded former Probate Code Section 296.1 (repealed by 1983 Cal. Stat. ch. 842 § 20). For background on the provisions of this part, see the Comment to this part under the part heading.

§ 223. Joint tenants

Comment. Section 223 continues Section 223 of the repealed Probate Code without substantive change. The section is drawn from Section 3 of the Uniform Simultaneous Death Act (1953). As to the construction of provisions drawn from uniform acts, see Section 2. See also Sections 221 (provision of governing instrument prevails), 230-234 (proceeding to determine whether one person survived another). Section 226 limits the application of this chapter to cases where the person the priority of whose death is in issue died on or after January 1, 1985 (the date this chapter of the repealed Probate Code first became operative). As to the application of any amendments made after that date, see Section 3.

Background on Section 223 of Repealed Code

Section 223 was added by 1983 Cal. Stat. ch. 842 § 22. The section superseded former Probate Code Section 296.2 (repealed by 1983 Cal. Stat. ch. 842 § 20). The rule governing the dividing of the property was the same as under former law. For background on the provisions of this part, see the Comment to this part under the part heading.

§ 224. Life or accident insurance

Comment. Section 224 continues Section 224 of the repealed Probate Code without substantive change. The rule provided by this section is subject to contrary provisions in the insurance contract. See Section 221. See also Sections 230-234 (proceeding to determine whether one person survived another).

Section 224 adopts the special rule provided by the optional provision of Section 5 of the Uniform Simultaneous Death Act (1953). As to the construction of provisions drawn from uniform acts, see Section 2. This special rule applies where the insurance policy is community or quasi-community property and there is no alternative beneficiary except the

estate or personal representative of the insured. In such a case, the proceeds are not paid to the estate or personal representative of the insured, but are distributed half as if one spouse had survived and as if that half belonged to that spouse, and half as if the other spouse had survived and as if that other half belonged to the other spouse. See Section 103.

Section 226 limits the application of this chapter to cases where the person the priority of whose death is in issue died on or after January 1, 1985 (the date this chapter of the repealed Probate Code first became operative). As to the application of any amendments made after that date, see Section 3.

Background on Section 224 of Repealed Code

Section 224 was added by 1983 Cal. Stat. ch. 842 § 22 and was amended by 1984 Cal. Stat. ch. 892 § 15. The section superseded former Probate Code Section 296.3 (repealed by 1983 Cal. Stat. ch. 842 § 20). The 1984 amendment substituted the special rule provided by the optional provision of Section 5 of the Uniform Simultaneous Death Act (1953) for former subdivision (b) of Section 224. For background on the provisions of this part, see the Comment to this part under the part heading.

§ 226. Chapter not applicable if death prior to January 1, 1985

Comment. Section 226 continues Section 226 of the repealed Probate Code without substantive change. This section limits the application of Sections 220-224 to cases where the person the priority of whose death is in issue died on or after the date those sections of the repealed Probate Code first became operative. As to the application of any amendments made after that date, see Section 3.

Background on Section 226 of Repealed Code

Section 226 was a new provision added by 1984 Cal. Stat. ch. 892 § 15.2. For background on the provisions of this part, see the Comment to this part under the part heading.

CHAPTER 2. PROCEEDINGS TO DETERMINE SURVIVAL

§ 230. Petition for purpose of determining survival

Comment. Section 230 continues Section 230 of the repealed Probate Code without substantive change. This section refers to various provisions that present an issue of survival. See also Sections 1020-1023 (signing and verifying petition).

Background on Section 230 of Repealed Code

Section 230 was a new provision added by 1983 Cal. Stat. ch. 842 § 22. Sections 230-234 were drawn from former Sections 296.41 and 296.42 (repealed by 1983 Cal. Stat. ch. 842 § 20). For background on the provisions of this part, see the Comment to this part under the part heading.

§ 231. Persons authorized to file petition

Comment. Section 231 continues Section 231 of the repealed Probate Code without substantive change. "Personal representative" has been substituted for "executor or administrator." See Section 58 (defining "personal representative"). See also Sections 1004 (notice of pendency of proceeding), 1020-1023 (signing and verifying petition).

Background on Section 231 of Repealed Code

Section 231 was added by 1983 Cal. Stat. ch. 842 § 22. The section restated a portion of the first sentence of former Probate Code Section 296.41 (repealed by 1983 Cal. Stat. ch. 842 § 20) without substantive change. For background on the provisions of this part, see the Comment to this part under the part heading.

§ 232. Court where petition is to be filed

Comment. Section 232 continues Section 232 of the repealed Probate Code without change.

Background on Section 232 of Repealed Code

Section 232 was added by 1983 Cal. Stat. ch. 842 § 22. Subdivision (a) restated a portion of the first sentence of former Probate Code Section 296.41 (repealed by 1983 Cal. Stat. ch. 842 § 20) without substantive change. Subdivision (b) restated the last sentence of former Probate Code Section 296.42 (repealed by 1983 Cal. Stat. ch. 842 § 20) without substantive change. For background on the provisions of this part, see the Comment to this part under the part heading.

§ 233. Notice of hearing

Comment. Section 233 continues Section 233 of the repealed Probate Code without substantive change. For general provisions relating to notice, see Sections 1200-1221. See also Sections 1250-1252 (request for special notice), 1260-1265 (proof of giving of notice). As to notice to known heirs or known devisees, see Section 1206.

The notice provisions referred to in Section 233 do not apply to a particular notice where the notice was delivered, mailed, posted, or first published before July 1, 1991. In such a case, the applicable law in effect before July 1, 1991, continues to apply to the giving of the notice. Section 1200(c). As to the application of any amendments made after that date, see Section 3.

Background on Section 233 of Repealed Code

Section 233 was added by 1983 Cal. Stat. ch. 842 § 22 and amended by 1987 Cal. Stat. ch. 923 § 23. Subdivision (a) restated the second sentence of former Probate Code Section 296.41 (repealed by 1983 Cal. Stat. ch. 842 § 20) without substantive change. Subdivision (b) superseded a portion of the second sentence and all of the third sentence of former Probate Code Section 296.41. Subdivision (c) was drawn from a portion of the first sentence of former Probate Code Section 296.42 (repealed by 1983 Cal. Stat. ch. 842 § 20). For background on the provisions of this part, see the Comment to this part under the part heading.

The 1987 amendment revised Section 233 to conform to the new general notice and procedural provisions. See Sections 1200-1299 of the 1987 Probate Code. The cross-

reference to the section governing the mailing of notice of hearing was revised to substitute a reference to Section 1220 for the former reference to Probate Code Section 1200.5 (repealed by 1987 Cal. Stat. ch. 923 § 59). Fifteen days' notice is required under Section 1220, instead of ten days' notice as required under former Section 1200.5. The former provision that excused giving notice to a person who joins in the petition was omitted because this provision had been generalized in former Probate Code Section 1201 (repealed by 1988 Cal. Stat. ch. 1199 § 64.5), which was continued as Section 1041. Subdivision (b) was revised by adding the reference to "known" devisees. This revision conforms to Section 1206 (notice to known heirs or devisees). The cross-reference to the section relating to special notice was revised to refer to Section 1250. The former provision that required the clerk to set the petition for hearing was generalized in Section 1285 (repealed by 1988 Cal. Stat. ch 1199 § 64.5), continued in Section 1041. Former subdivision (c) was deleted because it was unnecessary in light of the general provision in Section 1260 (proof of giving notice of hearing required).

§ 234. Determination and order

Comment. Section 234 continues Section 234 of the repealed Probate Code with the first sentence of the former section omitted. The omitted sentence, which required the court to hear the petition and any objections to the petition, was unnecessary in view of the general provision found in Section 1046. For general provisions relating to hearings and orders, see Sections 1040-1050.

Background on Section 234 of Repealed Code

Section 234 was added by 1983 Cal. Stat. ch. 842 § 22. Section 234 restated a portion of former Probate Code Section 296.42 (repealed by 1983 Cal. Stat. ch. 842 § 20) with the addition of the "clear and convincing evidence" standard. For background on the provisions of this part, see the Comment to this part under the part heading.

PART 6. DISTRIBUTION AMONG HEIRS OR BENEFICIARIES

Comment. This part supersedes Part 6 (commencing with Section 240) of Division 2 of the repealed Probate Code. The superseded part was enacted upon recommendation of the California Law Revision Commission. See *Recommendation Relating to Distribution Under a Will or Trust,* 18 Cal. L. Revision Comm'n Reports 269 (1986); *Communication Concerning Assembly Bill 196,* 18 Cal. L. Revision Comm'n Reports 367, 369-70 (1986). See also *Recommendation Relating to Revision of Wills and Intestate Succession Law,* 17 Cal. L. Revision Comm'n Reports 537, 542-44, 549-50 (1984); *Communication of Law Revision Commission Concerning Assembly Bill 2290,* 18 Cal. L. Revision Comm'n Reports 77, 83-84 (1986); *Tentative Recommendation Relating to Wills and Intestate Succession,* 16 Cal. L. Revision Comm'n Reports 2301, 2338-40 (1982); *Report of Senate Committee on Judiciary on Assembly Bills 25 and 68,* 17 Cal. L. Revision Comm'n Reports 867, 871 (1984).

CHAPTER 1. INTESTATE DISTRIBUTION SYSTEM

§ 240. Method of intestate distribution of shares

Comment. Section 240 continues Section 240 of the repealed Probate Code without change. This section was drawn from Section 2-106 of the Uniform Probate Code (1987). As to the construction of provisions drawn from uniform acts, see Section 2. Under this section, the primary division of the estate takes place at the first generation having any living members. This changes the rule of Maud v. Catherwood, 67 Cal. App. 2d 636, 155 P.2d 111 (1945). For sections applying Section 240, see Civil Code § 1389.4; Prob. Code §§ 6147, 6402, 6402.5. For an example of distribution under Section 240, see the Comment to Section 245. As to the effect of a disclaimer, see Section 282.

Section 240 applies only where the death of the decedent in the case of intestate succession or of the testator or trustor occurs on or after January 1, 1985; the law applicable prior to January 1, 1985, continues to apply where the death occurred before January 1, 1985. See Section 241. As to the application of any amendments made after that date, see Section 3.

Background on Section 240 of Repealed Code

Section 240 was a new provision added by 1983 Cal. Stat. ch. 842 § 22 and was amended by 1984 Cal. Stat. ch. 892 § 16 and 1985 Cal. Stat. ch. 982 § 6. The 1984 and 1985 amendments made substantive and clarifying revisions. For background on the provisions of this part, see the Comment to this part under the part heading.

§ 241. Section 240 not applicable where death occurs before January 1, 1985

Comment. Section 241 continues Section 241 of the repealed Probate Code without substantive change. The reference to the death of the "testator or trustor" has been revised and expanded to include the death of the "testator, settlor, or other transferor." This section limits the application of Section 240 to cases where the decedent died on or after January 1, 1985 (the operative date of the 1984 amendment to Section 240 of the repealed Probate Code). As to the application of any amendments made after that date, see Section 3.

Background on Section 241 of Repealed Code

Section 241 was a new provision added by 1984 Cal. Stat. ch. 892 § 16.1. For background on the provisions of this part, see the Comment to this part under the part heading.

CHAPTER 2. DISTRIBUTION UNDER A WILL, TRUST, OR OTHER INSTRUMENT

§ 245. Distribution of shares where instrument does not specify manner

Comment. Section 245 continues Section 245 of the repealed Probate Code, but the section is expanded to cover not only a will or trust, but also any "other instrument." The addition of the words "other instrument" makes clear, for example, that the section would apply to an instrument exercising a power of appointment.

Section 245 gives one drafting a will, trust, or other instrument the option of selecting the distribution system provided in Section 240. Section 240 is the distribution system used in case of intestate succession. As to the effect of a disclaimer, see Section 282.

Under Section 240, if the first generation of issue of the deceased ancestor are themselves all deceased, the initial division of the property is not made at that generation, but is instead made at the first descending generation of issue having at least one living member. See generally Fellows, Simon & Rau, *Public Attitudes About Property Distribution at Death and Intestate Succession Laws in the United States,* 1978 Am. B. Found. Research J. 321, 380. For example, if there have been four generations of descendants of the deceased ancestor but all of the deceased ancestor's children are dead, distribution under Section 240 is made as follows (brackets indicate those who are dead when distribution is made):

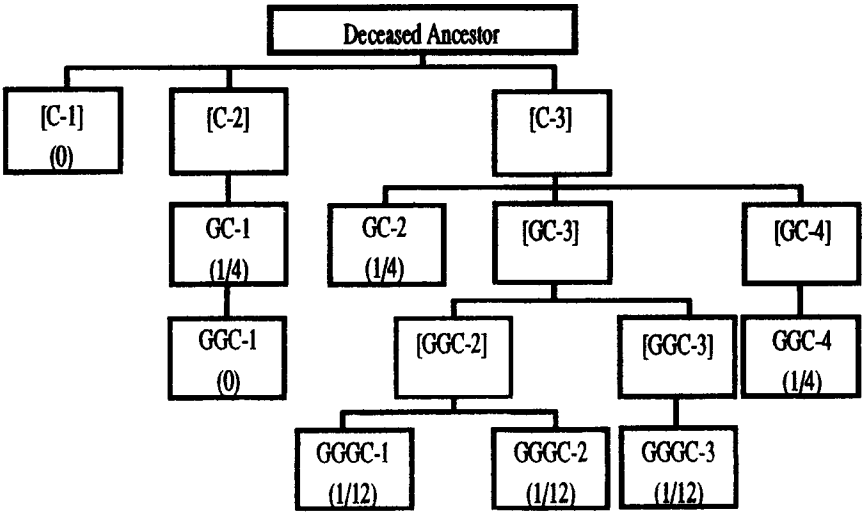

If GGGC-3 in the above example were deceased, leaving three surviving children, each of the surviving children would take a one-thirty-sixth share.

Subdivision (b) provides that certain language is not an expression of a contrary intention sufficient to negate application of Section 245. For example, if property in a testamentary trust is to be distributed when the trust terminates to "the descendants of the testator per capita" and at the time of distribution the testator's three children survive and one of the surviving children has five children, each of the surviving children takes a one-third share; the five grandchildren of the testator take nothing since their parent survives. This results from applying the distribution scheme of Section 240. Under paragraph (1) of subdivision (b) of Section 245, this scheme is not negated by use of the term "per capita," since the living members of the designated class ("descendants of the testator") are not all of the same generation. In this context, it is reasonable to assume that the use of the term "per capita" is not intended to provide a share for a class member whose parent or other ancestor is still living and takes a share, although the drafter of the instrument may provide for such a result by appropriately clear language. In order for the testator's grandchildren in the above example to take under Section 245, their parent (the testator's child) must be dead at the time of distribution. In such a case, the testator's two living children each take a one-third share and the five children of the deceased child share equally in the one-third share their deceased parent would have taken.

Background on Section 245 of Repealed Code

Section 245 was a new provision added by 1985 Cal. Stat. ch. 982 § 7. Language in subdivision (a) ("when a will or trust that expresses no contrary intention provides for issue or descendants to take without specifying the manner", it is governed by Section 240) continued a provision found in former Probate Code Section 240 before that section was amended by 1985 Cal. Stat. ch. 982 § 6. For background on the provisions of this part, see the Comment to this part under the part heading.

§ 246. Distribution of shares where instrument specifies division by representation or per stirpes

Comment. Section 246 continues Section 246 of the repealed Probate Code, but the section is expanded to cover not only a will or trust, but also any "other instrument." This section gives one drafting a will, trust, or other instrument (such as an instrument exercising a power of appointment) the option of selecting a pure stirpital representation system. Under such a system, the roots or stocks are determined at the children's generation, whether or not any children are then living. See generally Fellows, Simon & Rau, *Public Attitudes About Property Distribution at Death and Intestate Succession Laws in the United States,*

1978 Am. B. Found. Research J. 321, 378-79. See also the discussion in Maud v. Catherwood, 67 Cal. App. 2d 636, 155 P.2d 111 (1945).

For example, if there have been four generations of descendants of the deceased ancestor but all of the deceased ancestor's children are dead, distribution under Section 246 is made as follows (brackets indicate those who are dead when distribution is made):

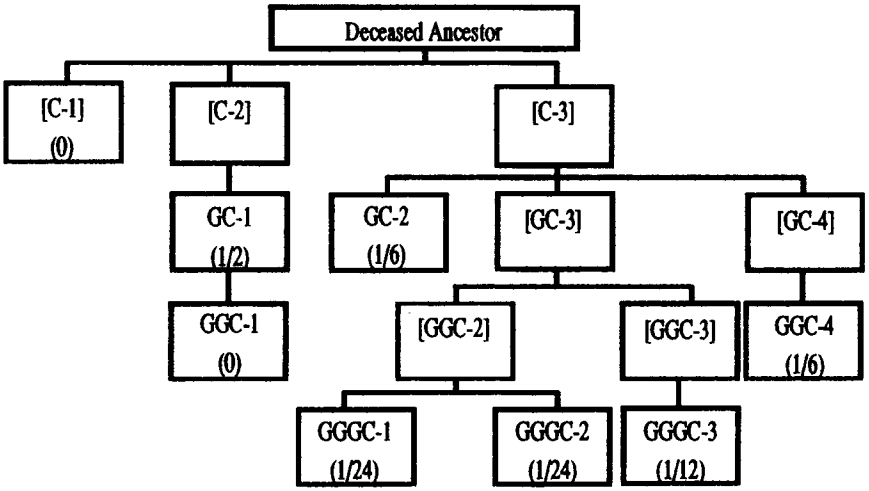

The terms defined in subdivision (b) are subject to some other definition which may be provided in the instrument. For example, a will may define "by right of representation" to refer to the distribution pattern for intestate succession, rather than to a pure stirpital distribution pattern as under subdivision (a). In such a case, the definition provided in the instrument will control. As to the effect of a disclaimer, see Section 282.

Background on Section 246 of Repealed Code

Section 246 was a new provision added by 1985 Cal. Stat. ch. 982 § 7. Subdivision (c) superseded a provision that was found in Section 240 of the repealed Probate Code before that section was amended by 1985 Cal. Stat. ch. 982 § 6. For background on the provisions of this part, see the Comment to this part under the part heading.

§ 247. Distribution of shares where instrument specifies division per capita at each generation

Comment. Section 247 continues Section 247 of the repealed Probate Code, but the section is expanded to cover not only a will or trust, but also any "other instrument." This section gives one drafting a will, trust, or other instrument (such as an instrument exercising a power of appointment) the option of selecting the system of per capita at each generation distribution. See generally Waggoner, *A Proposed Alternative to the Uniform Probate Code's System for Intestate Distribution Among Descendants,* 66 Nw. U.L. Rev. 626, 630-33 (1971);

Fellows, Simon & Rau, *Public Attitudes About Property Distribution at Death and Intestate Succession Laws in the United States,* 1978 Am. B. Found. Research J. 321, 380-82.

For example, if there have been four generations of descendants of the deceased ancestor but all of the deceased ancestor's children are dead, distribution under Section 247 is made as follows (brackets indicate those who are dead when distribution is made):

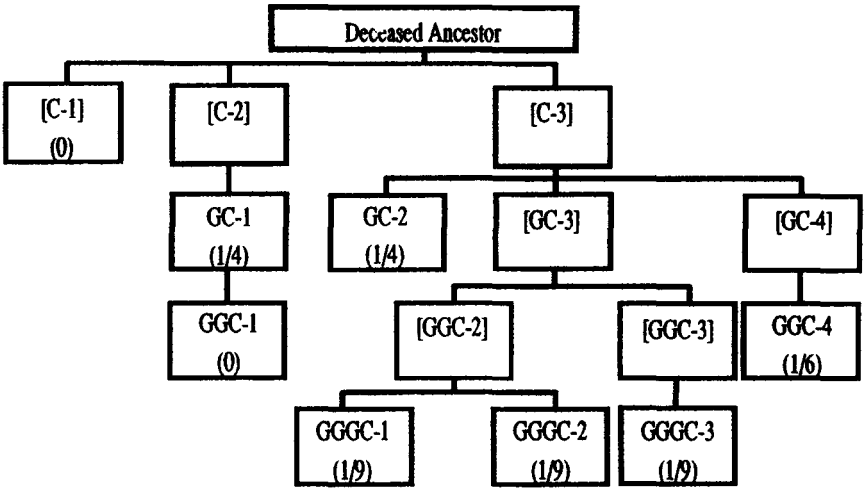

As to the effect of a disclaimer, see Section 282.

Background on Section 247 of Repealed Code

Section 247 was a new provision added by 1985 Cal. Stat. ch. 982 § 7. For background on the provisions of this part, see the Comment to this part under the part heading.

PART 7. EFFECT OF HOMICIDE

Comment. This part supersedes Part 7 (commencing with Section 250) of Division 2 of the repealed Probate Code. The superseded part was enacted upon recommendation of the California Law Revision Commission. See *Tentative Recommendation Relating to Wills and Intestate Succession,* 16 Cal. L. Revision Comm'n Reports 2301, 2346-47, 2382-85, 2509 (1982). See also *Report of Senate Committee on Judiciary on Assembly Bills 25 and 68,* 17 Cal. L. Revision Comm'n Reports 867, 870 (1984).

The Commission recommended legislation was originally enacted as Sections 200-206 of the repealed Probate Code (added by 1983 Cal. Stat. ch. 842 § 22). These provisions were repealed by 1984 Cal. Stat. ch. 527 § 1 and reenacted as Sections 250-256 of the repealed Probate Code by 1984 Cal. Stat. ch. 527 § 3. See *Recommendation Relating to Recording*

Affidavit of Death, 17 Cal. L. Revision Comm'n Reports 493, 504-07 (1984).

§ 250. Wills, intestate succession, and family protection

Comment. Section 250 continues Section 250 of the repealed Probate Code with the addition of references to nomination of a "conservator." This section is consistent with Section 2-803(a) of the Uniform Probate Code (1987), except that language is added to Section 250 to cover various matters in more detail than the Uniform Probate Code section. As to the construction of provisions drawn from uniform acts, see Section 2.

Under paragraph (3) of subdivision (a), one who feloniously and intentionally kills a spouse is entitled to no share of the decedent's quasi-community property since, for most purposes, the decedent's quasi-community property is treated as the decedent's separate property during the decedent's lifetime. See 7 B. Witkin, Summary of California Law *Community Property* § 125, at 5219 (8th ed. 1974). By way of contrast, under paragraph (2) of subdivision (a), the spousal killer is disqualified from taking the decedent's half of the community property by intestate succession, but the killer's one-half ownership interest in the community property (see Civil Code § 5105) is not affected. See also Prob. Code §§ 100, 103.

Background on Section 250 of Repealed Code

Section 250 was added by 1984 Cal. Stat. ch. 527 § 3. The section restated without substantive change former Probate Code Section 200 (enacted by 1983 Cal. Stat. ch. 842 § 22 and repealed by 1984 Cal. Stat. ch. 527 § 1). Former Probate Code Sections 200-206 (repealed by 1984 Cal. Stat. ch. 527 § 1) superseded former Probate Code Section 258 (repealed by 1983 Cal. Stat. ch. 842 § 19). Under Section 250, the killer is disqualified from taking from the victim only if the killing is felonious and intentional. Under former Probate Code Section 258, the killer was disqualified if the killing was accidental but was within the felony murder rule. This part applies only where the decedent was killed on or after January 1, 1985. See Section 257. As to the application of any amendments made after that date, see Section 3. For background on the provisions of this part, see the Comment to this part under the part heading.

§ 251. Joint tenancies

Comment. Section 251 continues Section 251 of the repealed Probate Code without change. This section is the same in substance as Section 2-803(b) of the Uniform Probate Code (1987) and is consistent with prior California law. See, e.g., Estate of Hart, 135 Cal. App. 3d 684, 185 Cal. Rptr. 544 (1982); Johansen v. Pelton, 8 Cal. App. 3d 625, 87 Cal. Rptr. 784 (1970). As to the construction of provisions drawn from uniform acts, see Section 2. This part applies only where the decedent was killed on or after January 1, 1985. See Section 257. As to the application of any amendments made after that date, see Section 3.

Background on Section 251 of Repealed Code

Section 251 was added by 1984 Cal. Stat. ch. 527 § 3. The section restated without substantive change former Probate Code Section 201 (enacted by 1983 Cal. Stat. ch. 842 § 22 and repealed by 1984 Cal. Stat. ch. 527 § 1). Former Probate Code Sections 200-206 (repealed by 1984 Cal. Stat. ch. 527 § 1) superseded former Probate Code Section 258 (repealed by 1983 Cal. Stat. ch. 842 § 19). For background on the provisions of this part, see the Comment to this part under the part heading.

§ 252. Life insurance and other beneficiary designations

Comment. Section 252 continues Section 252 of the repealed Probate Code without change. This section is the same in substance as Section 2-803(c) of the Uniform Probate Code (1987). As to the construction of provisions drawn from uniform acts, see Section 2.

Under Sections 252 and 253, if the killer is treated as having predeceased the decedent for the purpose of life insurance or other contractual benefits, the killer's heirs are similarly disqualified. See Meyer v. Johnson, 115 Cal. App. 646, 2 P.2d 456 (1931); cf. Estate of Jeffers, 134 Cal. App. 3d 729, 182 Cal. Rptr. 300 (1982) (killer may not designate alternate beneficiary of insurance proceeds).

This part applies only where the decedent was killed on or after January 1, 1985. See Section 257. As to the application of any amendments made after that date, see Section 3.

Background on Section 252 of Repealed Code

Section 252 was added by 1984 Cal. Stat. ch. 527 § 3. The section continued without change former Probate Code Section 202 (enacted by 1983 Cal. Stat. ch. 842 § 22 and repealed by 1984 Cal. Stat. ch. 527 § 1). Former Probate Code Sections 200-206 (repealed by 1984 Cal. Stat. ch. 527 § 1) superseded former Probate Code Section 258 (repealed by 1983 Cal. Stat. ch. 842 § 19). For background on the provisions of this part, see the Comment to this part under the part heading.

§ 253. Cases not controlled by other provisions

Comment. Section 253 continues Section 253 of the repealed Probate Code without change. This section is the same in substance as Section 2-803(d) of the Uniform Probate Code (1987). As to the construction of provisions drawn from uniform acts, see Section 2. Section 253 makes clear that any other acquisition by the killer is treated in accordance with the principles of this part. See Estate of Jeffers, 134 Cal. App. 3d 729, 182 Cal. Rptr. 300 (1982) (killer may not designate alternate beneficiary of insurance proceeds). See the Comment to Section 252. This part applies only where the decedent was killed on or after January 1, 1985. See Section 257. As to the application of any amendments made after that date, see Section 3.

Background on Section 253 of Repealed Code

Section 253 was added by 1984 Cal. Stat. ch. 527 § 3. The section continued without change former Probate Code Section 203 (enacted by 1983 Cal. Stat. ch. 842 §

22 and repealed by 1984 Cal. Stat. ch. 527 § 1). Former Probate Code Sections 200-206 (repealed by 1984 Cal. Stat. ch. 527 § 1) superseded former Probate Code Section 258 (repealed by 1983 Cal. Stat. ch. 842 § 19). For background on the provisions of this part, see the Comment to this part under the part heading.

§ 254. Determination whether killing was felonious and intentional

Comment. Section 254 continues Section 254 of the repealed Probate Code without change. This section is the same in substance as Section 2-803(e) of the Uniform Probate Code (1987). An acquittal after a criminal trial has no effect in a subsequent civil proceeding to establish that the killing was felonious and intentional for the purposes of this part. The last sentence of Section 254 is not found in the Uniform Probate Code, but it is consistent with the Uniform Probate Code Section 2-803(e) (1987). This part applies only where the decedent was killed on or after January 1, 1985. See Section 257. As to the application of any amendments made after that date, see Section 3. As to the construction of provisions drawn from uniform acts, see Section 2.

Background on Section 254 of Repealed Code

Section 254 was added by 1984 Cal. Stat. ch. 527 § 3. The section continued without change former Probate Code Section 204 (enacted by 1983 Cal. Stat. ch. 842 § 22 and repealed by 1984 Cal. Stat. ch. 527 § 1). Former Probate Code Sections 200-206 (repealed by 1984 Cal. Stat. ch. 527 § 1) superseded former Probate Code Section 258 (repealed by 1983 Cal. Stat. ch. 842 § 19).

Section 254 was amended by 1989 Cal. Stat. ch. 21 § 2 to add the words "a final judgment of" in subdivision (b). This made clear that the civil court may determine the issue by the civil standard of proof during the pendency of an appeal from a criminal conviction of felonious and intentional killing.

Under Section 254, the civil standard of proof (preponderance of the evidence) is used in the civil proceeding to disqualify the killer from taking from the victim. Under prior law, the criminal burden of proof (beyond a reasonable doubt) was used in the civil proceeding. Estate of McGowan, 35 Cal. App. 3d 611, 619, 111 Cal. Rptr. 39, 45 (1973). Under Section 254, an acquittal after a criminal trial has no effect in a subsequent civil proceeding. Under former Section 258, an acquittal was given conclusive effect in the later civil proceeding. See *Communication from the California Law Revision Commission Concerning Assembly Bill 156*, 20 Cal. L. Revision Comm'n Reports 227, 228 (1990). For background on the provisions of this part, see the Comment to this part under the part heading.

§ 255. Good faith purchasers

Comment. Section 255 continues Section 255 of the repealed Probate Code without change. This section is the same in substance as the first sentence of Section 2-803(f) of the Uniform Probate Code (1987). As to the construction of provisions drawn from uniform acts, see Section 2. This part applies only where the decedent was killed on or after January 1, 1985. See Section 257. As to the application of any amendments made after that date, see Section 3.

Background on Section 255 of Repealed Code

Section 255 was added by 1984 Cal. Stat. ch. 527 § 3. The section continued without change former Probate Code Section 205 (enacted by 1983 Cal. Stat. ch. 842 § 22 and repealed by 1984 Cal. Stat. ch. 527 § 1). Former Probate Code Sections 200-206 (repealed by 1984 Cal. Stat. ch. 527 § 1) superseded former Probate Code Section 258 (repealed by 1983 Cal. Stat. ch. 842 § 19). For background on the provisions of this part, see the Comment to this part under the part heading.

§ 256. Protection of obligors

Comment. Section 256 continues Section 256 of the repealed Probate Code without change. This section is the same in substance as the second sentence of Section 2-803(f) of the Uniform Probate Code (1987). As to the construction of provisions drawn from uniform acts, see Section 2. This part applies only where the decedent was killed on or after January 1, 1985. See Section 257. As to the application of any amendments made after that date, see Section 3.

Background on Section 256 of Repealed Code

Section 256 was added by 1984 Cal. Stat. ch. 527 § 3. The section continued without change former Probate Code Section 206 (enacted by 1983 Cal. Stat. ch. 842 § 22 and repealed by 1984 Cal. Stat. ch. 527 § 1). Former Probate Code Sections 200-206 superseded former Probate Code Section 258 (repealed by 1983 Cal. Stat. ch. 842 § 19). For background on the provisions of this part, see the Comment to this part under the part heading.

§ 257. Applicability of part

Comment. Section 257 continues Section 257 of the repealed Probate Code without substantive change. This section limits the application of Sections 250-256 to cases where the decedent was killed on or after January 1, 1985 (the operative date of those sections of the repealed Probate Code). As to the application of any amendments made after that date, see Section 3.

Background on Section 257 of Repealed Code

Section 257 was a new provision added by 1984 Cal. Stat. ch. 892 § 16.5. For background on the provisions of this part, see the Comment to this part under the part heading.

PART 8. DISCLAIMER OF TESTAMENTARY AND OTHER INTERESTS

Comment. This part supersedes Part 8 (commencing with Section 260) of the repealed Probate Code. The superseded division was enacted upon recommendation of the California Law Revision Commission. See *Recommendation Relating to Disclaimer of Testamentary and Other Interests,* 16 Cal. L. Revision Comm'n Reports 207 (1982).

As to interests created before January 1, 1984, see Section 287. After December 31, 1983, an interest that would otherwise be taken by a

beneficiary may be disclaimed only as provided in this part. See Section 288. As to the application of any amendments made after that date, see Section 3. A disclaimer effective under federal law is effective as a disclaimer under this part. See Section 295.

CHAPTER 1. DEFINITIONS

§ 260. Definitions govern construction of this part

Comment. Section 260 continues Section 260 of the repealed Probate Code without substantive change.

Background on Section 260 of Repealed Code

Section 260 was a new provision added by 1983 Cal. Stat. ch. 17 § 2 and amended by 1988 Cal. Stat. ch. 1199 § 29. The 1988 amendment made a nonsubstantive revision. See *Comments to Conforming Revisions and Repeals*, 19 Cal. L. Revision Comm'n Reports 1031, 1042 (1988). For background on the provisions of this part, see the Comment to this part under the part heading.

§ 262. "Beneficiary"

Comment. Section 262 continues Section 262 of the repealed Probate Code without change. See also Section 56 ("person" defined).

Background on Section 262 of Repealed Code

Section 262 was added by 1983 Cal. Stat. ch. 17 § 2. The section restated the first portion of subdivision (a) of former Probate Code Section 190 (repealed by 1983 Cal. Stat. ch. 17 § 1) without substantive change. For background on the provisions of this part, see the Comment to this part under the part heading.

§ 263. "Creator of the interest"

Comment. Section 263 continues Section 263 of the repealed Probate Code without substantive change. The word "settlor" has been substituted for "trustor" in paragraph (3) of subdivision (a) to conform to the terminology in the Trust Law. See also Sections 55 ("P.O.D. account" defined), 56 ("person" defined), 80 ("Totten trust account" defined), 266 ("employee benefit plan" defined), 267 ("interest" defined).

Background on Section 263 of Repealed Code

Section 263 was a new provision added by 1983 Cal. Stat. ch. 17 § 2. For background on the provisions of this part, see the Comment to this part under the part heading.

§ 264. "Disclaimant"

Comment. Section 264 continues Section 264 of the repealed Probate Code without change.

Background on Section 264 of Repealed Code

Section 264 was added by 1983 Cal. Stat. ch. 17 § 2. The section restated subdivision (d) of former Probate Code Section 190 (repealed by 1983 Cal. Stat. ch. 17 § 1) without substantive change. For background on the provisions of this part, see the Comment to this part under the part heading.

§ 265. "Disclaimer"

Comment. Section 265 continues Section 265 of the repealed Probate Code without change. As to interests created before January 1, 1984, see Section 287. After December 31, 1983, an interest that would otherwise be taken by a beneficiary may be disclaimed only as provided in this part. See Section 288. As to the application of any amendments made after that date, see Section 3. A disclaimer effective under federal law is effective as a disclaimer under this part. See Section 295.

Background on Section 265 of Repealed Code

Section 265 was added by 1983 Cal. Stat. ch. 17 § 2. The section restated subdivision (c) of former Probate Code Section 190 (repealed by 1983 Cal. Stat. ch. 17 § 1) without substantive change. For background on the provisions of this part, see the Comment to this part under the part heading.

§ 266. "Employee benefit plan"

Comment. Section 266 continues Section 266 of the repealed Probate Code without change.

Background on Section 266 of Repealed Code

Section 266 was a new provision added by 1983 Cal. Stat. ch. 17 § 2. For background on the provisions of this part, see the Comment to this part under the part heading.

§ 267. "Interest"

Comment. Section 267 continues Section 267 of the repealed Probate Code without change. See also Sections 55 ("P.O.D. account" defined), 80 ("Totten trust account" defined), 266 ("employee benefit plan" defined).

Background on Section 267 of Repealed Code

Section 267 was added by 1983 Cal. Stat. ch. 17 § 2. Subdivision (a) restated subdivision (b) of former Probate Code Section 190 (repealed by 1983 Cal. Stat. ch. 17 § 1) without substantive change. Subdivision (b) restated a portion of subdivision (a) of former Probate Code Section 190 (as amended by 1982 Cal. Stat. ch. 41 § 1) without substantive change. For background on the provisions of this part, see the Comment to this part under the part heading.

CHAPTER 2. GENERAL PROVISIONS

§ 275. Right of beneficiary to disclaim interest

Comment. Section 275 continues Section 275 of the repealed Probate Code without change. A disclaimer may be valid under this chapter but not meet the requirements of federal law. See I.R.C. § 2518 (1988); Jewett v. Commissioner, 455 U.S. 305 (1982). Hence, if a disclaimer is executed to avoid federal taxes, the requirements of federal law must be met. A disclaimer effective under federal law is effective as a disclaimer under this part. See Section 295. As to interests created before January 1, 1984, see Section 287. After December 31, 1983, an interest that

would otherwise be taken by a beneficiary may be disclaimed only as provided in this part. As to the application of any amendments made after that date, see Section 3. See Section 288.

Background on Section 275 of Repealed Code

Section 275 was added by 1983 Cal. Stat. ch. 17 § 2 and amended by 1988 Cal. Stat. ch. 1199 § 33. The section continued the first sentence of former Probate Code Section 190.1 (repealed by 1983 Cal. Stat. ch. 17 § 1). The 1988 amendment made a nonsubstantive revision. See *Comments to Conforming Revisions and Repeals*, 19 Cal. L. Revision Comm'n Reports 1031, 1042 (1988). For background on the provisions of this part, see the Comment to this part under the part heading.

§ 276. Disclaimer on behalf of conservatee

Comment. Section 276 continues Section 276 of the repealed Probate Code without change. As to interests created before January 1, 1984, see Section 287. After December 31, 1983, an interest that would otherwise be taken by a beneficiary may be disclaimed only as provided in this part. As to the application of any amendments made after that date, see Section 3. See Section 288. A disclaimer effective under federal law is effective as a disclaimer under this part. See Section 295.

Background on Section 276 of Repealed Code

Section 276 was added by 1983 Cal. Stat. ch. 17 § 2. The section continued the substance of a portion of former Probate Code Section 190.2 (repealed by 1983 Cal. Stat. ch. 17 § 1) and added a reference to the substituted judgment provisions of the Guardianship-Conservatorship Law. This continued prior law which made the substituted judgment provisions specifically applicable to disclaimers. See Section 2580(b)(9). For background on the provisions of this part, see the Comment to this part under the part heading.

§ 277. Disclaimer on behalf of minor or decedent

Comment. Section 277 continues Section 277 of the repealed Probate Code without substantive change. The phrase "other than the petitioner or persons joining in the petition" has been omitted as unnecessary in view of Section 1201. See also Section 1003 (appointment of guardian ad litem).

Under subdivision (b), a disclaimer on behalf of a decedent may be made under the Independent Administration of Estates Act. A disclaimer may be made under that act only if the requirements of Chapter 4 (commencing with Section 10580) of Part 6 of Division 7 (notice of proposed action procedure) are satisfied. See Sections 10510, 10519.

Paragraph (1) of subdivision (e) is drawn from Civil Code Section 1388.3 (release of power of appointment on behalf of minor donee). Subdivision (f) adopts the standard provided by Civil Code Section 1388.3 for release of a power of appointment on behalf of a minor donee.

The new notice provisions referred to in Section 277 do not apply to a particular notice where the notice was delivered, mailed, posted, or first

published before July 1, 1991. In such a case, the applicable law in effect before July 1, 1991, continues to apply to the giving of the notice. Section 1200(c). As to interests created before January 1, 1984, see Section 287. After December 31, 1983, an interest that would otherwise be taken by a beneficiary may be disclaimed only as provided in this part. See Section 288. As to the application of any amendments made after those dates, see Section 3. A disclaimer effective under federal law is effective as a disclaimer under this part. See Section 295.

Background on Section 277 of Repealed Code

Section 277 was added by 1983 Cal. Stat. ch. 17 § 2 and was amended by 1987 Cal. Stat. ch. 923 § 24. Subdivision (a) continued the substance of a portion of former Probate Code Section 190.2 (repealed by 1983 Cal. Stat. ch. 17 § 1) but added a reference to a guardian ad litem and required court approval. Subdivision (b) continued the substance of a portion of former Probate Code Section 190.2 and required court approval unless the personal representative is acting under the Independent Administration of Estates Act. Subdivisions (c), (d), (e), and (f) were new.

The 1987 amendments made the following revisions in Section 277:

(1) In subdivision (b) the cross-reference to the Independent Administration of Estates Act was revised.

(2) In subdivision (e)(2) the cross-reference to notice of hearing was revised.

(3) Subdivision (e)(4) was deleted as an unnecessary duplication of the general provision in Section 1202 (additional notice on court order).

For background on the provisions of this part, see the Comment to this part under the part heading. See also *Communication from California Law Revision Commission Concerning Assembly Bill 708*, 19 Cal. L. Revision Comm'n Reports 545, 547 (1988).

§ 278. Contents of disclaimer

Comment. Section 278 continues Section 278 of the repealed Probate Code without substantive change. As to interests created before January 1, 1984, see Section 287. After December 31, 1983, an interest that would otherwise be taken by a beneficiary may be disclaimed only as provided in this part. See Section 288. As to the application of any amendments made after that date, see Section 3. A disclaimer effective under federal law is effective as a disclaimer under this part. See Section 295.

Background on Section 278 of Repealed Code

Section 278 was added by 1983 Cal. Stat. ch. 17 § 2. The section restated the second sentence of former Probate Code Section 190.1 (repealed by 1983 Cal. Stat. ch. 17 § 1) without substantive change. For background on the provisions of this part, see the Comment to this part under the part heading.

§ 279. Time limits for filing disclaimer

Comment. Section 279 continues Section 279 of the repealed Probate Code without substantive change. The phrase "a living trust" has been substituted for "an inter vivos trust" to conform to the terminology of the

Trust Law. This section provides a more liberal rule concerning time of filing than does federal law. See I.R.C. § 2518 (1988); Jewett v. Commissioner, 455 U.S. 305 (1982). Federal law should be consulted if the disclaimer is executed to avoid federal taxes. See also Sections 55 ("P.O.D. account" defined), 56 ("person" defined), 80 ("Totten trust account" defined), 263 ("creator of the interest" defined), 266 ("employee benefit plan" defined). As to interests created before January 1, 1984, see Section 287. After December 31, 1983, an interest that would otherwise be taken by a beneficiary may be disclaimed only as provided in this part. See Section 288. As to the application of any amendments made after that date, see Section 3. A disclaimer effective under federal law is effective as a disclaimer under this part. See Section 295.

Background on Section 279 of Repealed Code

Section 279 was added by 1983 Cal. Stat. ch. 17 § 2. The section superseded former Probate Code Section 190.3 (repealed by 1983 Cal. Stat. ch. 17 § 1). For background on the provisions of this part, see the Comment to this part under the part heading.

§ 280. Filing of disclaimer; recording of disclaimers affecting real property

Comment. Section 280 continues Section 280 of the repealed Probate Code without change. Acknowledgment of a disclaimer affecting real property is not a prerequisite to the effectiveness of the disclaimer. See Section 278 (disclaimer to be in writing and be signed by disclaimant). However, subdivision (b) of Section 280 makes clear that acknowledgment of a disclaimer affecting real property is permissible, and subdivision (b) requires acknowledgment as a prerequisite to recording the disclaimer. As to interests created before January 1, 1984, see Section 287. After December 31, 1983, an interest that would otherwise be taken by a beneficiary may be disclaimed only as provided in this part. See Section 288. As to the application of any amendments made after that date, see Section 3. A disclaimer effective under federal law is effective as a disclaimer under this part. See Section 295.

Background on Section 280 of Repealed Code

Section 280 was added by 1983 Cal. Stat. ch. 17 § 2 and amended by 1988 Cal. Stat. ch. 1199 § 34. Subdivision (a) superseded the first paragraph of former Probate Code Section 190.4 (repealed by 1983 Cal. Stat. ch. 17 § 1) and was less restrictive than the former law. Subdivision (b) superseded the last paragraph of former Probate Code Section 190.4. The 1988 amendment made a nonsubstantive revision. See *Comments to Conforming Revisions and Repeals,* 19 Cal. L. Revision Comm'n Reports 1031, 1042 (1988). For background on the provisions of this part, see the Comment to this part under the part heading.

§ 281. Disclaimer irrevocable and binding

Comment. Subdivisions (a) and (b) of Section 281 continue Section 281 of the repealed Probate Code without change. This section makes

clear the effect of a disclaimer on creditors of the beneficiary. See also Section 283 (disclaimer not a fraudulent transfer). The binding effect of a disclaimer has no effect on the passing of the disclaimed interest pursuant to Section 282. As to interests created before January 1, 1984, see Section 287. After December 31, 1983, an interest that would otherwise be taken by a beneficiary may be disclaimed only as provided in this part. See Section 288. As to the application of any amendments made after that date, see Section 3. A disclaimer effective under federal law is effective as a disclaimer under this part. See Section 295.

Background on Section 281 of Repealed Code

Section 281 was added by 1983 Cal. Stat. ch. 17 § 2. The section restated the first sentence of former Probate Code Section 190.5 (repealed by 1983 Cal. Stat. ch. 17 § 1) without substantive change. For background on the provisions of this part, see the Comment to this part under the part heading.

§ 282. Effect of disclaimer

Comment. Subdivisions (a) and (b) of Section 282 continue Section 282 of the repealed Probate Code without substantive change, except that subdivision (b)(1) is revised to refer to other instruments for conformity with Part 6 (commencing with Section 240). Subdivision (c) continues the substance of 1984 Cal. Stat. ch. 892, § 50.

The introductory clause of subdivision (a) makes clear that a condition of survival is not a contingency otherwise provided in the will, disapproving dictum in Estate of Murphy, 92 Cal. App. 3d 413, 426, 154 Cal. Rptr. 859 (1979).

Clause (2) of the first sentence of subdivision (a) makes clear that a disclaimer has the effect of accelerating the possession and enjoyment of subsequent interests. This provision is drawn from Section 3 of the Uniform Disclaimer of Transfers by Will, Intestacy or Appointment Act (1978) and Section 3 of the Uniform Disclaimer of Transfers Under Nontestamentary Instruments Act (1978). The pertinent portion of the Comment to Section 3 of the Uniform Disclaimer of Transfers by Will, Intestacy or Appointment Act explains the provision as follows:

"*Acceleration of Future Interests:* If a life estate or other future interest is disclaimed, the problem is raised of whether succeeding interests or estates accelerate in possession or enjoyment or whether the disclaimed interest must be marshalled to await the actual happening of the contingency. Section 3 provides that remainder interests are accelerated, the second clause specifically stating that any future interest which is to take effect in possession or enjoyment after the termination of the estate or interest disclaimed, takes effect as if the disclaimant had predeceased the event which determines that the taker has become finally ascertained and his interest indefeasibly vested. Thus, unless the

decedent or donor of the power has otherwise provided, if T leaves his estate in trust to pay the income to his son S for life, remainder to his son's children who survive him, and S disclaims with two children then living, the remainder in the children accelerates; the trust terminates and the children receive possession and enjoyment, even though the son may subsequently have other children or one or more of the living children may die during their father's lifetime. The will or instrument of transfer may be drafted to avoid acceleration if desired."

Paragraph (1) of subdivision (b) is designed to prevent an heir from disclaiming property for the purpose of increasing the share of his or her line at the expense of other lines of the decedent's descendants. For example, suppose the decedent has two children: The disclaimant (C-1) is living and has two children (GC-1 and GC-2, the decedent's grandchildren). The decedent's other child (C-2) has predeceased the decedent leaving one child (GC-3). But for the disclaimer, C-1's share is one-half and GC-3 takes the other half. See Sections 240, 245. See also Section 6402. If the disclaimant (C-1) is treated as having predeceased the decedent as provided in subdivision (a) of Section 282 and the rule of Sections 240 and 245 is applied, the estate would be divided at the grandchildren's generation, with GC-1, GC-2, and GC-3 each taking one-third. Paragraph (1) of subdivision (b) precludes the disclaimer from reducing the estate to which GC-3 would otherwise be entitled were the disclaimer not exercised. Paragraph (1) of subdivision (b) changes the rule concerning manner of distribution to children of the disclaimant as enunciated in Estate of Bryant, 149 Cal. App. 3d 323, 335, 196 Cal. Rptr. 856 (1983).

Paragraph (2) of subdivision (b) makes clear that the rule governing advancements and the rule governing charging a debt against an intestate share apply notwithstanding a disclaimer.

As to the construction of provisions drawn from uniform acts, see Section 2.

As to interests created before January 1, 1984, see Section 287. After December 31, 1983, an interest that would otherwise be taken by a beneficiary may be disclaimed only as provided in this part. See Section 288. As to the application of any amendments made after that date, see Section 3. A disclaimer effective under federal law is effective as a disclaimer under this part. See Section 295.

Background on Section 282 of Repealed Code

Section 282 was added by 1983 Cal. Stat. ch. 17 § 2 and amended by 1983 Cal. Stat. ch. 842 § 23, 1984 Cal. Stat. ch. 892 § 17, and 1987 Cal. Stat. ch. 923 § 25. The section superseded former Probate Code Section 190.6 (repealed by 1983 Cal. Stat. ch. 17 § 1). The 1983 amendment added subdivision (b). The 1984 amendment broadened

paragraph (1) of subdivision (b) by deleting the former limitation in that paragraph to disclaimers of "an interest created by intestate succession" and by applying the paragraph to situations where the division is made under any "other provision of a will or trust." See *Communication of Law Revision Commission Concerning Assembly Bill 2290*, 18 Cal. L. Revision Comm'n Reports 77, 84 (1986). The 1987 amendment revised the cross-reference in subdivision (b)(1). For background on the provisions of this part, see the Comment to this part under the part heading.

§ 283. Disclaimer not a fraudulent transfer

Comment. Section 283 continues Section 283 of the repealed Probate Code without change. This section rejects the rule of Estate of Kalt, 16 Cal. 2d 807, 108 P.2d 401 (1940), that the disclaimer of a legacy after the testator's death may be a fraudulent conveyance. See also Section 281 (binding effect of disclaimer). As to interests created before January 1, 1984, see Section 287. After December 31, 1983, an interest that would otherwise be taken by a beneficiary may be disclaimed only as provided in this part. See Section 288. As to the application of any amendments made after that date, see Section 3. A disclaimer effective under federal law is effective as a disclaimer under this part. See Section 295.

Background on Section 283 of Repealed Code

Section 283 was a new provision added by 1983 Cal. Stat. ch. 17 § 2 and amended by 1987 Cal. Stat. ch. 40 § 6. The 1987 amendment substituted "transfer" for "conveyance" to conform to the terminology of the Uniform Fraudulent Transfer Act (Civil Code Sections 3439-3439.12) and corrected a statutory cross-reference. For background on the provisions of this part, see the Comment to this part under the part heading. As to the construction of provisions drawn from uniform acts, see Section 2.

§ 284. Waiver of right to disclaim

Comment. Section 284 continues Section 284 of the repealed Probate Code without change. As to interests created before January 1, 1984, see Section 287. After December 31, 1983, an interest that would otherwise be taken by a beneficiary may be disclaimed only as provided in this part. See Section 288. As to the application of any amendments made after that date, see Section 3. A disclaimer effective under federal law is effective as a disclaimer under this part. See Section 295.

Background on Section 284 of Repealed Code

Section 284 was added by 1983 Cal. Stat. ch. 17 § 2 and amended by 1988 Cal. Stat. ch. 1199 § 35. The section restated the second sentence of former Probate Code Section 190.5 (repealed by 1983 Cal. Stat. ch. 17 § 1) without substantive change. The 1988 amendment made a nonsubstantive revision. See *Comments to Conforming Revisions and Repeals*, 19 Cal. L. Revision Comm'n Reports 1031, 1042 (1988). For background on the provisions of this part, see the Comment to this part under the part heading.

§ 285. Disclaimer not permitted after interest accepted

Comment. Section 285 continues Section 285 of the repealed Probate Code without change. Subdivision (b) is drawn in part from Section 4(a)

of the Uniform Disclaimer of Transfers by Will, Intestacy or Appointment Act (1978).

Subdivision (d) makes clear that a joint tenant is not, during the life of the joint tenancy, to be considered as having accepted the interest that is taken by surviving the other joint tenant. This is consistent with Sections 263(b)(11) ("creator of the interest" defined with respect to joint tenancies) and 267(b)(11) ("interest" defined). Under this chapter there are two interests that may be disclaimed by a joint tenant—the interest created when the person becomes a joint tenant and the interest that is acquired by operation of the right of survivorship when the other joint tenant dies. A similar rule is provided in Section 2(d) of the Uniform Disclaimer of Property Interests Act (1978) and in Section 1 of the Uniform Disclaimer of Transfers Under Nontestamentary Instruments Act (1978).

As to the construction of provisions drawn from uniform acts, see Section 2.

As to interests created before January 1, 1984, see Section 287. After December 31, 1983, an interest that would otherwise be taken by a beneficiary may be disclaimed only as provided in this part. See Section 288. As to the application of any amendments made after that date, see Section 3. A disclaimer effective under federal law is effective as a disclaimer under this part. See Section 295.

Background on Section 285 of Repealed Code

Section 285 was added by 1983 Cal. Stat. ch. 17 § 2. The section superseded former Probate Code Section 190.7 (repealed by 1983 Cal. Stat. ch. 17 § 1). For background on the provisions of this part, see the Comment to this part under the part heading.

§ 286. Right to disclaim not affected by spendthrift or similar restriction

Comment. Section 286 continues Section 286 of the repealed Probate Code without change. As to the effect of a disclaimer, see Sections 281-283. As to interests created before January 1, 1984, see Section 287. After December 31, 1983, an interest that would otherwise be taken by a beneficiary may be disclaimed only as provided in this part. See Section 288. As to the application of any amendments made after that date, see Section 3. A disclaimer effective under federal law is effective as a disclaimer under this part. See Section 295.

Background on Section 286 of Repealed Code

Section 286 was added by 1983 Cal. Stat. ch. 17 § 2. The section continued former Probate Code Section 190.8 (repealed by 1983 Cal. Stat. ch. 17 § 1). For background on the provisions of this part, see the Comment to this part under the part heading.

§ 287. Application of part to interest created before January 1, 1984

Comment. Section 287 continues Section 287 of the repealed Probate Code without change. After December 31, 1983, an interest that would otherwise be taken by a beneficiary may be disclaimed only as provided in this part. See Section 288. As to the application of any amendments made after that date, see Section 3. A disclaimer effective under federal law is effective as a disclaimer under this part. See Section 295. Subdivision (b) of Section 282 (preventing heir from disclaiming property for purpose of increasing share of his or her line at the expense of other lines of the decedent's descendants) applies only to cases where the disclaimer is filed on or after January 1, 1985. See Section 282.

Background on Section 287 of Repealed Code

Section 287 was added by 1983 Cal. Stat. ch. 17 § 2 and amended by 1988 Cal. Stat. ch. 1199 § 36. The section was drawn from former Probate Code Section 190.9 (repealed by 1983 Cal. Stat. ch. 17 § 1) but provided a new operative date. The 1988 amendment made a nonsubstantive revision. See *Comments to Conforming Revisions and Repeals*, 19 Cal. L. Revision Comm'n Reports 1031, 1042 (1988). For background on the provisions of this part, see the Comment to this part under the part heading.

§ 288. Exclusive means of disclaimer

Comment. Section 288 continues Section 288 of the repealed Probate Code without change. A purported disclaimer made after December 31, 1983, must comply with the requirements of this part; if it does not, it is not recognized as valid as a common law disclaimer or renunciation. As to interests created before January 1, 1984, see Section 287. A disclaimer effective under federal law is effective as a disclaimer under this part. See Section 295.

Background on Section 288 of Repealed Code

Section 288 was added by 1983 Cal. Stat. ch. 17 § 2 and amended by 1988 Cal. Stat. ch. 1199 § 37. The section continued the substance of former Probate Code Section 190.10 (repealed by 1983 Cal. Stat. ch. 17 § 1) except that Section 288 made ineffective a common law renunciation or disclaimer that did not satisfy the requirements of this part. See also Section 295 (disclaimers effective under federal law are effective under this part). The 1988 amendment made a nonsubstantive revision. See *Comments to Conforming Revisions and Repeals*, 19 Cal. L. Revision Comm'n Reports 1031, 1042 (1988). For background on the provisions of this part, see the Comment to this part under the part heading.

CHAPTER 3. DISCLAIMERS EFFECTIVE UNDER FEDERAL LAW

§ 295. Disclaimer effective under federal law effective under this part

Comment. Section 295 continues Section 295 of the repealed Probate Code without change. This section makes a disclaimer that is valid under

federal law effective under California law even though the disclaimer would not otherwise be effective under this part. See I.R.C. § 2518 (qualified disclaimers for purposes of federal gift tax). Section 295 also makes clear that certain transfers qualifying as disclaimers under federal law are effective as disclaimers under California law. See I.R.C. § 2518(c)(3). As to interests created before January 1, 1984, see Section 287. After December 31, 1983, an interest that would otherwise be taken by a beneficiary may be disclaimed only as provided in this part. See Section 288. As to the application of any amendments made after that date, see Section 3.

Background on Section 295 of Repealed Code

Section 295 was a new provision added by 1983 Cal. Stat. ch. 17 § 2 and amended by 1988 Cal. Stat. ch. 1199 § 38. The 1988 amendment made a nonsubstantive revision. See *Comments to Conforming Revisions and Repeals*, 19 Cal. L. Revision Comm'n Reports 1031, 1043 (1988). For background on the provisions of this part, see the Comment to this part under the part heading.

PART 9. TRUST COMPANY AS FIDUCIARY

§ 300. Appointment of trust company

Comment. Section 300 continues Section 300 of the repealed Probate Code without change.

Background on Section 300 of Repealed Code

Section 300 was added by 1988 Cal. Stat. ch. 1199 § 41. The section restated former Probate Code Section 480 (repealed by 1988 Cal. Stat. ch. 1199 § 47) without substantive change. See *Communication from the California Law Revision Commission Concerning Assembly Bill 2841*, 19 Cal. L. Revision Comm'n Reports 1201, 1209 (1988).

§ 301. Oath and bond of trust company

Comment. Section 301 continues Section 301 of the repealed Probate Code without change. As to a trust company acting as a trustee, see Section 15602 (Trust Law).

Background on Section 301 of Repealed Code

Section 301 was added by 1988 Cal. Stat. ch. 1199 § 41. The section restated former Probate Code Section 481 (repealed by 1988 Cal. Stat. ch. 1199 § 47) but Section 301 no longer applies to a trust company acting as a trustee. See Section 15602 (trust law). See also *Communication from the California Law Revision Commission Concerning Assembly Bill 2841*, 19 Cal. L. Revision Comm'n Reports 1201, 1209 (1988).

PART 10. DELIVERY OF DECEDENT'S TANGIBLE PERSONAL PROPERTY

§ 330. Delivery of decedent's tangible personal property

Comment. Section 330 continues Section 330 of the repealed Probate Code without substantive change. Section 330 makes clear that the

specified officials and agencies need not wait 40 days from the death of the decedent to deliver decedent's personal effects and other tangible personal property to decedent's spouse, relatives, conservator, or guardian. Cf. Section 13100 (40-day delay for use of affidavit procedure). If the official or agency relies on a document described in subdivision (d) of Section 13104 as reasonable proof of identity, the official or agency is not liable for so relying.

Background on Section 330 of Repealed Code

Section 330 was added by 1989 Cal. Stat. ch. 21 § 3. See *Communication from the California Law Revision Commission Concerning Assembly Bill 156,* 20 Cal. L. Revision Comm'n Reports 227, 228 (1990).

PART 11. FIDUCIARIES' WARTIME SUBSTITUTION LAW

Comment. This part supersedes Part 11 (commencing with Section 350) of Division 2 of the repealed Probate Code. The superseded part was enacted upon recommendation of the California Law Revision Commission. See *Communication from the California Law Revision Commission Concerning Assembly Bill 2841,* 19 Cal. L. Revision Comm'n Reports 1201, 1211-16 (1988).

CHAPTER 1. GENERAL PROVISIONS

Article I. Short Title and Definitions

§ 350. Short title

Comment. Section 350 continues Section 350 of the repealed Probate Code without change.

Background on Section 350 of Repealed Code

Section 350 was added by 1988 Cal. Stat. ch. 1199 § 41.5. The section restated former Code of Civil Procedure Section 1700 without substantive change. For background on the provisions of this part, see the Comment to this part under the part heading.

§ 351. Definitions govern construction of this part

Comment. Section 351 continues Section 351 of the repealed Probate Code without change.

Background on Section 351 of Repealed Code

Section 351 was added by 1988 Cal. Stat. ch. 1199 § 41.5. The section restated part of former Code of Civil Procedure Section 1700.1 without substantive change. For background on the provisions of this part, see the Comment to this part under the part heading.

§ 352. "Consultant"

Comment. Section 352 continues Section 352 of the repealed Probate Code without change.

Background on Section 352 of Repealed Code

Section 352 was added by 1988 Cal. Stat. ch. 1199 § 41.5. The section restated former Code of Civil Procedure Section 1700.6 (consultant under a trust) without substantive change. For background on the provisions of this part, see the Comment to this part under the part heading.

§ 353. "Estate"

Comment. Section 353 continues Section 353 of the repealed Probate Code without change.

Background on Section 353 of Repealed Code

Section 353 was a new provision added by 1988 Cal. Stat. ch. 1199 § 41.5. For background on the provisions of this part, see the Comment to this part under the part heading.

§ 354. "Interested person"

Comment. Section 354 continues Section 354 of the repealed Probate Code without change.

Background on Section 354 of Repealed Code

Section 354 was a new provision added by 1988 Cal. Stat. ch. 1199 § 41.5. For background on the provisions of this part, see the Comment to this part under the part heading.

§ 355. "Original fiduciary"

Comment. Section 355 continues Section 355 of the repealed Probate Code without change.

Background on Section 355 of Repealed Code

Section 355 was a new provision added by 1988 Cal. Stat. ch. 1199 § 41.5. For background on the provisions of this part, see the Comment to this part under the part heading.

§ 356. "War service"

Comment. Section 356 continues Section 356 of the repealed Probate Code without substantive change.

Background on Section 356 of Repealed Code

Section 356 was added by 1988 Cal. Stat. ch. 1199 § 41.5. The section restated former Code of Civil Procedure Section 1700.7 without substantive change, except that the former reference to the part of the continental United States below the 49th parallel was replaced by a reference in subdivision (c) to the fifty states. In subdivision (a), the reference to the Air Force was new and the references to certain auxiliary organizations was omitted as unnecessary in light of the general language. In subdivision (b), the reference to time of war was new. For background on the provisions of this part, see the Comment to this part under the part heading.

Article 2. Scope of Part

§ 360. Part applies to all fiduciaries

Comment. Section 360 continues Section 360 of the repealed Probate Code with the addition of the reference to "consultants." This part

applies to personal representatives, trustees, guardians, conservators, and other legal representatives. See Section 39 ("fiduciary" defined).

Background on Section 360 of Repealed Code

Section 360 was added by 1988 Cal. Stat. ch. 1199 § 41.5. The section superseded former Code of Civil Procedure Section 1706. For background on the provisions of this part, see the Comment to this part under the part heading.

§ 361. Provision in instrument controls

Comment. Section 361 continues Section 361 of the repealed Probate Code without change.

Background on Section 361 of Repealed Code

Section 361 was added by 1988 Cal. Stat. ch. 1199 § 41.5. The section superseded former Code of Civil Procedure Section 1705. For background on the provisions of this part, see the Comment to this part under the part heading.

Article 3. Procedural Provisions

§ 365. Jurisdiction of proceedings

Comment. Section 365 continues Section 365 of the repealed Probate Code without change. For the proper court in a decedent's estate, see Sections 7050-7052. For the proper court in a guardianship or conservatorship estate, see Sections 2200-2203. For the proper court in a trust estate, see Sections 17000-17005. For general provisions, see Sections 1000-1004 (rules of practice), 1020-1023 (petitions and other papers), 1040-1050 (hearings and orders).

Background on Section 365 of Repealed Code

Section 365 was added by 1988 Cal. Stat. ch. 1199 § 41.5. The section superseded the second sentence of former Code of Civil Procedure Section 1701, the third sentence of former Code of Civil Procedure Section 1702, and part of the first sentence of former Code of Civil Procedure Section 1702.1. For background on the provisions of this part, see the Comment to this part under the part heading.

§ 366. Notice of hearing

Comment. Section 366 continues Section 366 of the repealed Probate Code without substantive change. Notice under this part is subject to general provisions governing notice under this code. For general provisions relating to notice, see 1200-1230 (notice of hearing), 1250-1252 (request for special notice), 1260-1265 (proof of giving of notice).

Background on Section 366 of Repealed Code

Section 366 was added by 1988 Cal. Stat. ch. 1199 § 41.5. The section superseded former Code of Civil Procedure Section 1701.1, part of the second sentence of former Code of Civil Procedure Section 1701.2, the second sentence of former Code of Civil Procedure Section 1702.1, the introductory part of former Code of Civil Procedure Section 1703.1, part of the first sentence of former Code of Civil Procedure Section 1703.2, and former Code of Civil Procedure Section 1704. For background on the provisions of this part, see the Comment to this part under the part heading.

CHAPTER 2. APPOINTMENT OF SUBSTITUTE FIDUCIARY

§ 370. Petition for appointment of substitute, suspension of powers, or account

Comment. Section 370 continues Section 370 of the repealed Probate Code without substantive change. Where there is a cofiduciary, appointment of a substitute fiduciary may be unnecessary, since the cofiduciary may be authorized to act. See, e.g., Sections 2105 (authority of joint guardian or conservator to act), 9630 (authority of joint personal representative to act), 15622 (temporary incapacity of cotrustee). This section does not apply to the extent the will, trust, or other instrument provides a different rule. See Section 361 (provision in instrument controls).

Background on Section 370 of Repealed Code

Section 370 was added by 1988 Cal. Stat. ch. 1199 § 41.5. Subdivision (a) restated the first sentence of former Code of Civil Procedure Section 1701 and former Code of Civil Procedure Section 1701.3 without substantive change. Subdivisions (b) and (c) superseded the first sentence of former Code of Civil Procedure 1701.2. For background on the provisions of this part, see the Comment to this part under the part heading.

§ 371. Powers and duties of substitute fiduciary

Comment. Section 371 continues Section 371 of the repealed Probate Code without change. This section does not apply to the extent the will, trust, or other instrument provides a different rule. See Section 361 (provision in instrument controls).

Background on Section 371 of Repealed Code

Section 371 was added by 1988 Cal. Stat. ch. 1199 § 41.5. The section restated former Code of Civil Procedure Section 1701.4 without substantive change. The reference to duties was new. For background on the provisions of this part, see the Comment to this part under the part heading.

§ 372. Bond of substitute fiduciary

Comment. Section 372 continues Section 372 of the repealed Probate Code without change. This section gives the court authority to vary the bond requirement. This would be appropriate, for example, where the instrument has waived the bond for the original fiduciary and it would be inappropriate to waive bond for the substitute fiduciary. This section does not apply to the extent the will, trust, or other instrument provides a different rule. See Section 361 (provision in instrument controls).

Background on Section 372 of Repealed Code

Section 372 was added by 1988 Cal. Stat. ch. 1199 § 41.5. The section restated former Code of Civil Procedure Section 1701.6 without substantive change, except for the addition of court authority to vary the bond requirement. For background on the provisions of this part, see the Comment to this part under the part heading.

§ 373. Reinstatement of original fiduciary

Comment. Section 373 continues Section 373 of the repealed Probate Code without change. This section gives the court discretion not to remove the substitute fiduciary. In certain circumstances, the court may determine that it is advisable to retain the substitute as a cofiduciary upon reinstatement of the original fiduciary. This section does not apply to the extent the will, trust, or other instrument provides a different rule. See Section 361 (provision in instrument controls).

Background on Section 373 of Repealed Code

Section 373 was added by 1988 Cal. Stat. ch. 1199 § 41.5. The section restated the second and third sentences of former Code of Civil Procedure Section 1701.2 without substantive change, except that the court was given discretion not to remove the substitute fiduciary. For background on the provisions of this part, see the Comment to this part under the part heading.

§ 374. Fiduciary's immunity for predecessor's acts

Comment. Section 374 continues Section 374 of the repealed Probate Code without change. This section does not apply to the extent the will, trust, or other instrument provides a different rule. See Section 361 (provision in instrument controls).

Background on Section 374 of Repealed Code

Section 374 was added by 1988 Cal. Stat. ch. 1199 § 41.5. The section restated part of former Code of Civil Procedure Section 1701.7 without substantive change. For background on the provisions of this part, see the Comment to this part under the part heading.

CHAPTER 3. DELEGATION OF POWERS

Article I. Delegation by Fiduciary

§ 380. Delegation of fiduciary's powers

Comment. Section 380 continues Section 380 of the repealed Probate Code without change. Where there is a cofiduciary, delegation of power may be unnecessary, since the cofiduciary may be authorized to act. See, e.g., Sections 15622 (temporary incapacity of cotrustee), 9630 (authority of joint personal representative to act), 2105 (authority of joint guardian or conservator to act). The authority to delegate powers to a cofiduciary under this chapter is an exception to the usual duty not to delegate. See Section 16012 (duty not to delegate to cotrustee). This section does not apply to the extent the will, trust, or other instrument provides a different rule. See Section 361 (provision in instrument controls).

Background on Section 380 of Repealed Code

Section 380 was added by 1988 Cal. Stat. ch. 1199 § 41.5. Subdivision (a) restated the first and second sentences of former Code of Civil Procedure Section 1702 without substantive change. Subdivision (b) superseded the first sentence of former Code of

Civil Procedure Section 1702.1. For background on the provisions of this part, see the Comment to this part under the part heading.

§ 381. Limitations on delegation

Comment. Section 381 continues Section 381 of the repealed Probate Code without change. Where there is a cofiduciary, delegation of power may be unnecessary, since the cofiduciary may be authorized to act. See, e.g., Sections 2105 (authority of joint guardian or conservator to act), 9630 (authority of joint personal representative to act), 15622 (temporary incapacity of cotrustee). This section does not apply to the extent the will, trust, or other instrument provides a different rule. See Section 361 (provision in instrument controls).

Background on Section 381 of Repealed Code

Section 381 was added by 1988 Cal. Stat. ch. 1199 § 41.5. The section restated the introductory clause and subdivision (a) of former Code of Civil Procedure Section 1702.2 without substantive change. For background on the provisions of this part, see the Comment to this part under the part heading.

§ 382. Resumption of fiduciary's powers

Comment. Section 382 continues Section 382 of the repealed Probate Code without change. This section does not apply to the extent the will, trust, or other instrument provides a different rule. See Section 361 (provision in instrument controls).

Background on Section 382 of Repealed Code

Section 382 was added by 1988 Cal. Stat. ch. 1199 § 41.5. The section restated the third sentence of former Code of Civil Procedure Section 1702.1 without substantive change. For background on the provisions of this part, see the Comment to this part under the part heading.

§ 383. Fiduciary's immunity for delegate's acts

Comment. Section 383 continues Section 383 of the repealed Probate Code without change. This section does not apply to the extent the will, trust, or other instrument provides a different rule. See Section 361 (provision in instrument controls).

Background on Section 383 of Repealed Code

Section 383 was added by 1988 Cal. Stat. ch. 1199 § 41.5. The section restated former Code of Civil Procedure Section 1702.4 without substantive change. For background on the provisions of this part, see the Comment to this part under the part heading.

Article 2. Delegation by Consultant

§ 385. Delegation of consultant's powers

Comment. Section 385 continues Section 385 of the repealed Probate Code without change. This section does not apply to the extent the will, trust, or other instrument provides a different rule. See Section 361 (provision in instrument controls).

Background on Section 385 of Repealed Code

Section 385 was added by 1988 Cal. Stat. ch. 1199 § 41.5. The section restated former Code of Civil Procedure Section 1703 without substantive change. For background on the provisions of this part, see the Comment to this part under the part heading.

§ 386. Suspension of consultant's powers

Comment. Section 386 continues Section 386 of the repealed Probate Code without change. This section does not apply to the extent the will, trust, or other instrument provides a different rule. See Section 361 (provision in instrument controls).

Background on Section 386 of Repealed Code

Section 386 was added by 1988 Cal. Stat. ch. 1199 § 41.5. The section restated former Code of Civil Procedure Section 1703.1 without substantive change. For background on the provisions of this part, see the Comment to this part under the part heading.

§ 387. Resumption of consultant's powers

Comment. Section 387 continues Section 387 of the repealed Probate Code without change. This section does not apply to the extent the will, trust, or other instrument provides a different rule. See Section 361 (provision in instrument controls).

Background on Section 387 of Repealed Code

Section 387 was added by 1988 Cal. Stat. ch. 1199 § 41.5. The section restated former Code of Civil Procedure Section 1703.2 without substantive change. For background on the provisions of this part, see the Comment to this part under the part heading.

§ 388. Consultant's immunity for delegate's acts

Comment. Section 388 continues Section 388 of the repealed Probate Code without change. This section does not apply to the extent the will, trust, or other instrument provides a different rule. See Section 361 (provision in instrument controls).

Background on Section 388 of Repealed Code

Section 388 was added by 1988 Cal. Stat. ch. 1199 § 41.5. The section restated former Code of Civil Procedure Section 1703.3 without substantive change. For background on the provisions of this part, see the Comment to this part under the part heading.

PART 12. PROBATE REFEREES

Comment. This part supersedes Part 12 (commencing with Section 400) of Division 2 of the repealed Probate Code. The superseded part was enacted upon recommendation of the California Law Revision Commission. See *Recommendation Relating to Inventory and Appraisal,* 19 Cal. L. Revision Comm'n Reports 741 (1988). See also *Communication from the California Law Revision Commission*

Concerning Assembly Bill 2841, 19 Cal. L. Revision Comm'n Reports 1201, 1215-17 (1988).

CHAPTER 1. APPOINTMENT AND REVOCATION

§ 400. Appointment by Controller

Comment. Section 400 continues Section 400 of the repealed Probate Code without change. For qualification of an applicant, see Section 401. See also Section 402(c) (list of qualified applicants).

Background on Section 400 of Repealed Code

Section 400 was added by 1988 Cal. Stat. ch. 1199 § 44. Subdivision (a) continued a portion of the first sentence of the first paragraph of former Probate Code Section 1305 (repealed by 1988 Cal. Stat. ch. 1199 § 65) without change. Subdivision (b) superseded the third sentence of the first paragraph of former Probate Code Section 1305. For background on the provisions of this part, see the Comment to this part under the part heading.

§ 401. Qualifications for appointment

Comment. Section 401 continues Section 401 of the repealed Probate Code without change.

Background on Section 401 of Repealed Code

Section 401 was added by 1988 Cal. Stat. ch. 1199 § 44. Subdivision (a) restated a portion of the first sentence of the first paragraph and the fifth sentence of the second paragraph of former Probate Code Section 1305 (repealed by 1988 Cal. Stat. ch. 1199 § 65) without substantive change. Subdivision (b) continued the second sentence of the first paragraph of former Probate Code Section 1305 without change. The reference to the State Personnel Board was not continued. See "Background to Section 402 of Repealed Code." For background on the provisions of this part, see the Comment to this part under the part heading.

§ 402. Qualification examination

Comment. Section 402 continues Section 402 of the repealed Probate Code without change.

Background on Section 402 of Repealed Code

Section 402 was added by 1988 Cal. Stat. ch. 1199 § 44. The section restated former Probate Code Section 1306 (repealed by 1988 Cal. Stat. ch. 1199 § 65), deleting the references to the State Personnel Board. At the time former Section 1306 was repealed, the State Personnel Board no longer administered the examination. Instead, the Controller was contracting with Cooperative Personnel Services, an agency created through a joint powers agreement, for administration of the examination. For background on the provisions of this part, see the Comment to this part under the part heading.

§ 403. Term of office of probate referee

Comment. Section 403 continues Section 403 of the repealed Probate Code without change.

Background on Section 403 of Repealed Code

Section 403 was added by 1988 Cal. Stat. ch. 1199 § 44. The section restated the second, third, and sixth sentences of the second paragraph of former Probate Code

Section 1305 (repealed by 1988 Cal. Stat. ch. 1199 § 65), with the addition that a probate referee's eligibility for reappointment lasts until five years after expiration of the referee's term of office. Section 403 also made clear that an appointment may be for a term less than four years in the case of an appointment for the purpose of completion of the term of another probate referee. For background on the provisions of this part, see the Comment to this part under the part heading.

§ 404. Standards for probate referee

Comment. Section 404 continues Section 404 of the repealed Probate Code without substantive change.

Background on Section 404 of Repealed Code

Section 404 was added by 1988 Cal. Stat. ch. 1199 § 44. Subdivision (a) restated former Probate Code Section 1307 (repealed by 1988 Cal. Stat. ch. 1199 § 65), but made the adoption of standards mandatory rather than permissive. Subdivision (b) restated subdivision (a) of former Probate Code Section 1308 (repealed by 1988 Cal. Stat. ch. 1199 § 65) without substantive change. For background on the provisions of this part, see the Comment to this part under the part heading.

§ 405. Revocation of appointment of probate referee

Comment. Section 405 continues Section 405 of the repealed Probate Code without change. Revocation of appointment under Section 405 is independent of revocation under Section 404 (standards for probate referee).

Background on Section 405 of Repealed Code

Section 405 was added by 1988 Cal. Stat. ch. 1199 § 44. The section restated the first sentence of subdivision (b) of former Probate Code Section 1308 (repealed by 1988 Cal. Stat. ch. 1199 § 65) without substantive change. For background on the provisions of this part, see the Comment to this part under the part heading.

§ 406. Termination of authority

Comment. Section 406 continues Section 406 of the repealed Probate Code without substantive change. Other termination pursuant to law includes resignation.

Background on Section 406 of Repealed Code

Section 406 was added by 1988 Cal. Stat. ch. 1199 § 44. Subdivision (a) restated former Probate Code Section 1309 (repealed by 1988 Cal. Stat. ch. 1199 § 65) without substantive change. Subdivision (b) codified existing practice. For background on the provisions of this part, see the Comment to this part under the part heading.

§ 407. Political activities of probate referees

Comment. Section 407 continues Section 407 of the repealed Probate Code without substantive change. The two hundred dollar limitation of subdivision (a)(1) does not apply to the State Controller; solicitation, receipt, or contribution of any amount to a State Controller campaign is absolutely prohibited by subdivision (a)(2).

Background on Section 407 of Repealed Code

Section 407 was added by 1988 Cal. Stat. ch. 1199 § 44. Subdivisions (a) and (d) restated former Probate Code Section 1311 (repealed by 1988 Cal. Stat. ch. 1199 § 65),

with the addition of references to incumbency, reappointment, and committees, and the deletion of references to campaigns (other than campaigns for Controller) and seeking appointment. The two hundred dollar limitation of subdivision (a)(1) of Section 407 was extended to apply during a person's tenure as probate referee as well as during the time a person is an applicant for appointment.

Subdivision (b) was a new provision designed to facilitate compliance with the other requirements of the section.

Subdivision (c) restated former Probate Code Section 1312 (repealed by 1988 Cal. Stat. ch. 1199 § 65), with the added requirement of removal from office.

The transitional provision in former Probate Code Section 1312 (repealed by 1988 Cal. Stat. ch. 1199 § 65) was replaced by a new transitional provision in subdivision (e) of Section 407.

For background on the provisions of this part, see the Comment to this part under the part heading.

§ 408. Appointment of probate referee before operative date

Comment. Section 408 continues Section 408 of the repealed Probate Code without change. This section is a transitional provision intended to save an appointment made under the old law that could not necessarily be made under the new law. Revocation of an appointment made under the old law is authorized only under the revocation provisions of the new law.

Background on Section 408 of Repealed Code

Section 408 was a new provision added by 1988 Cal. Stat. ch. 1199 § 44. For background on the provisions of this part, see the Comment to this part under the part heading.

CHAPTER 2. POWERS OF PROBATE REFEREE

§ 450. General powers

Comment. Section 450 continues Section 450 of the repealed Probate Code without change. For provisions relating to decedents' estates, see Sections 8900-8980. For general provisions relating to referees of the court, see Code Civ. Proc. §§ 638-645.1.

Background on Section 450 of Repealed Code

Section 450 was added by 1988 Cal. Stat. ch. 1199 § 44. The section restated subdivision (b) of former Probate Code Section 1301 (repealed by 1988 Cal. Stat. ch. 1199 § 65) without substantive change. For background on the provisions of this part, see the Comment to this part under the part heading.

§ 451. Compelling appearance

Comment. Section 451 continues Section 451 of the repealed Probate Code without change.

Background on Section 451 of Repealed Code

Section 451 was added by 1988 Cal. Stat. ch. 1199 § 44. Subdivision (a) restated subdivision (a) of former Probate Code Section 1301 and former Probate Code Section 1302 (provisions repealed by 1988 Cal. Stat. ch. 1199 § 65), with the addition of the reference to a guardian, conservator, or other fiduciary, since the probate referee may

appraise estates other than decedents' estates. Subdivision (b) was new. For background on the provisions of this part, see the Comment to this part under the part heading.

§ 452. Examination, testimony, and production of documents

Comment. Section 452 continues Section 452 of the repealed Probate Code without substantive change.

Background on Section 452 of Repealed Code

Section 452 was added by 1988 Cal. Stat. ch. 1199 § 44. Subdivision (a) restated former Probate Code Section 1303 (repealed by 1988 Cal. Stat. ch. 1199 § 65), with the addition of the reference to production of documents. See Section 453 (protective orders and enforcement). Subdivision (b) was new. For background on the provisions of this part, see the Comment to this part under the part heading.

§ 453. Protective orders and enforcement

Comment. Section 453 continues Section 453 of the repealed Probate Code with the addition of the requirement that notice of the hearing be mailed not only to the probate referee and personal representative but also to the guardian, conservator, or other fiduciary. This conforms Section 453 to the scope of Section 451. For general provisions, see Sections 1000-1004 (rules of practice), 1020-1023 (petitions and other papers), 1040-1050 (hearings and orders), 1200-1230 (notice of hearing), 1250-1252 (request for special notice), 1260-1265 (proof of giving of notice).

Background on Section 453 of Repealed Code

Section 453 was added by 1988 Cal. Stat. ch. 1199 § 44. Subdivision (a) was drawn from Code of Civil Procedure Section 2037.8, with the addition of an automatic stay of enforcement during pendency of the petition. Subdivision (b) was new. For background on the provisions of this part, see the Comment to this part under the part heading.

PART 13. LITIGATION INVOLVING DECEDENT

CHAPTER 1. LIABILITY OF DECEDENT COVERED BY INSURANCE

Comment. This chapter supersedes Chapter 1 (commencing with Section 550) of Part 13 of Division 2 of the repealed Probate Code. The superseded chapter was enacted upon recommendation of the California Law Revision Commission. See *Recommendation Relating to Litigation Involving Decedents,* 19 Cal. L. Revision Comm'n Reports 899 (1988). See also *Communication from the California Law Revision Commission Concerning Assembly Bill 2841,* 19 Cal. L. Revision Comm'n Reports 1201, 1219 (1988).

This chapter made the following significant changes in prior law:

(1) This chapter applies uniformly to actions pending at the death of the decedent and actions commenced after the decedent's death.

(2) Court approval is not required before the plaintiff may commence an action against the estate for the insured amount.

(3) The estate of the decedent need not otherwise qualify for treatment under Sections 13100-13116 (affidavit procedure for collection or transfer of personal property).

(4) This chapter applies in any case where there is a claim for damages for which the decedent was insured, whether for injury to or death of a person caused by the wrongful act or neglect of the decedent, or otherwise.

(5) This chapter excuses a claim in probate only where the plaintiff is proceeding under this chapter, whether or not the insurer has otherwise accepted the defense of the cause or an appearance has been made on behalf of the decedent.

§ 550. Action authorized

Comment. Section 550 continues Section 550 of the repealed Probate Code without change. If the plaintiff seeks damages in excess of the insurance policy limits, the plaintiff must file a claim and establish the liability other than under this chapter. See Section 554 (damages). Subdivision (b) makes clear that this chapter does not preclude the establishment of liability by another procedure. See, e.g., Section 9000 et seq. (creditor claims). The time limited for bringing an action under this chapter is one year after expiration of the applicable statute of limitations, if it has not expired before the decedent's death. See Section 551 (statute of limitations).

Background on Section 550 of Repealed Code

Section 550 was added by 1988 Cal. Stat. ch. 1199 § 49. This chapter replaced former subdivision (b) of Section 385 of the Code of Civil Procedure, former Probate Code Sections 707, 709.1, and 721, and the third sentence of former Probate Code Section 709 (provisions of former Probate Code repealed by 1988 Cal. Stat. ch. 1199 § 53). For background on the provisions of this chapter, see the Comment to this chapter under the chapter heading.

§ 551. Statute of limitations

Comment. Section 551 continues Section 551 of the repealed Probate Code without change.

Background on Section 551 of Repealed Code

Section 551 was added by 1988 Cal. Stat. ch. 1199 § 49. The section restated the last part of Code of Civil Procedure Section 353(b) without substantive change. For background on the provisions of this chapter, see the Comment to this chapter under the chapter heading.

§ 552. Procedure

Comment. Section 552 continues Section 552 of the repealed Probate Code without change. Subdivision (c) makes clear that an action directed

toward collecting from the insurance proceeds under this chapter may be consolidated with an action against the decedent's personal representative for the excess. Consolidation may be appropriate since the issues relating to liability are the same. See also Sections 550(b) (remedies cumulative), 553 (defenses).

Background on Section 552 of Repealed Code

Section 552 was added by 1988 Cal. Stat. ch. 1199 § 49. As to subdivisions (a) and (b) of Section 552, see the Comment to Section 550. Subdivision (c) was new. For background on the provisions of this chapter, see the Comment to this chapter under the chapter heading.

§ 553. Defenses

Comment. Section 553 continues Section 553 of the repealed Probate Code without change.

Background on Section 553 of Repealed Code

Section 553 was added by 1988 Cal. Stat. ch. 1199 § 49. See the Comment to Section 550. For background on the provisions of this chapter, see the Comment to this chapter under the chapter heading.

§ 554. Damages

Comment. Section 554 continues Section 554 of the repealed Probate Code without change.

Background on Section 554 of Repealed Code

Section 554 was added by 1988 Cal. Stat. ch. 1199 § 49. Subdivision (a) of Section 554 restated subdivision (a) of former Probate Code Section 721 (repealed by 1988 Cal. Stat. ch. 1199 § 53) without substantive change, but made clear that the rule limiting recovery is subject to the exception provided in subdivision (b) of Section 554. Subdivision (b) was generalized from the second sentence of former Probate Code Section 707 (repealed by 1988 Cal. Stat. ch. 1199 § 53). See also the Comment to Section 550. For background on the provisions of this chapter, see the Comment to this chapter under the chapter heading.

§ 555. Application of chapter

Comment. Section 555 continues Section 555 of the repealed Probate Code without substantive change.

Background on Section 555 of Repealed Code

Section 555 was added by 1988 Cal. Stat. ch. 1199 § 49. For background on the provisions of this chapter, see the Comment to this chapter under the chapter heading.

CHAPTER 2. SURVIVAL OF ACTIONS

§ 573. Survival of actions

Comment. Section 573 continues Section 573 of the repealed Probate Code without change. For background on this section, see *Recommendation and Study Relating to Survival of Actions,* 3 Cal. L. Revision Comm'n Reports F-1 (1961). See also 3 Cal. L. Revision Comm'n Reports Leg. Hist. at 7 (1961).

Background on Section 573 of Repealed Code

Section 573 was added by 1987 Cal. Stat. ch. 923 § 35.5. The section restated former Section 573 (repealed by 1987 Cal. Stat. ch. 923 § 35) without substantive change.

PART 14. APPLICABILITY OF REPEALED OR AMENDED PROVISIONS RELATING TO COMPENSATION OF ESTATE ATTORNEY AND PERSONAL REPRESENTATIVE

§ 900. Applicability of repealed or amended provisions

Comment. Section 900 continues the substance of Section 27 of 1990 Cal. Stat. [AB 831] with the addition of the reference to Section 11000 in subdivision (b). The reference to Section 11000 is added because the 1990 amendment to Section 11000 was a part of the legislation relating to compensation of the estate attorney. Section 27 was an uncodified section, but its substance is continued here to facilitate use of the new Probate Code. See also Section 10406 (applicability of certain provisions of Independent Administration of Estates Act). For background, see *Recommendations Relating to Probate Law: Hiring and Paying Attorneys, Advisors, and Others; Compensation of Personal Representative,* 20 Cal. L. Revision Comm'n Reports 31 (1990); *Communication from California Law Revision Commission Concerning Assembly Bill 831,* 20 Cal. L. Revision Comm'n Reports ___ (1990).

DIVISION 3. GENERAL PROVISIONS OF A PROCEDURAL NATURE

PART 1. GENERAL PROVISIONS

Comment. This part supersedes Part 1 (commencing with Section 1000) of Division 3 of the repealed Probate Code. The superseded part was enacted upon recommendation of the California Law Revision Commission. See *Recommendation Relating to Rules of Procedure in Probate,* 19 Cal. L. Revision Comm'n Reports 917-39, 951 (1988). See also *Communication from California Law Revision Commission Concerning Assembly Bill 2841,* 19 Cal. L. Revision Comm'n Reports 1201, 1223-26 (1988); *Comments to Conforming Revisions and Repeals,* 19 Cal. L. Revision Comm'n Reports 1031, 1082-84 (1988). For an earlier Law Revision Commission recommendation that included probate procedural provisions, see *Recommendation Relating to Notice in Probate Proceedings,* 19 Cal. L. Revision Comm'n Reports 357, 365-66, 383-90 (1988).

CHAPTER 1. RULES OF PRACTICE

§ 1000. General rules of practice

Comment. Section 1000 continues Section 1000 of the repealed Probate Code without change. This section provides a default rule that applies in circumstances where there is no special rule applicable in probate proceedings. For example, the general rules of practice apply to discovery, trials, new trials, appeals, and other matters of procedure. General rules of the Code of Civil Procedure do not apply, however, where this code provides a special rule. For example, jury trials are strictly limited in proceedings under this code. See Sections 1452 (guardianship and conservatorship proceedings), 7200 (estate administration), 17006 (trust administration). The right to make a motion for a new trial in proceedings for administration of a decedent's estate is limited in Section 7220. The right to appeal in decedent estate administration is limited to the orders set out in Section 7240. Many other limitations are provided in this chapter and in other provisions throughout this code. This general rule is also subject to the rulemaking power of the courts. See Section 1001.

Background on Section 1000 of Repealed Code

Section 1000 was added by 1988 Cal. Stat. ch. 1199 § 56. The section replaced the first, third, and fourth sentences of former Probate Code Section 1280 (repealed by 1988 Cal. Stat. ch. 1199 § 64.5) and the first sentence of former Probate Code Section 1283 (repealed by 1988 Cal. Stat. ch. 1199 § 64.5). For background on the provisions of this part, see the Comment to this part under the part heading.

§ 1001. Judicial Council and local court rules; forms

Comment. Section 1001 continues Section 1001 of the repealed Probate Code without change. This section is consistent with the fourth paragraph of Section 6 of Article VI of the California Constitution and with Government Code Section 68511.

Background on Section 1001 of Repealed Code

Section 1001 was a new provision added by 1988 Cal. Stat. ch. 1199 § 56. For background on the provisions of this part, see the Comment to this part under the part heading.

§ 1002. Costs

Comment. Section 1002 continues Section 1002 of the repealed Probate Code without change. For special provisions relating to costs, see, e.g., Sections 6544 (costs of proceedings for family allowance), 9255 (costs where creditor contests amount of allowed claim), 9653 (costs in action to recover fraudulently conveyed property), 11624 (costs on preliminary distribution). See also Code Civ. Proc. § 1026 (costs in actions involving fiduciary estate).

Background on Section 1002 of Repealed Code

Section 1002 was added by 1988 Cal. Stat. ch. 1199 § 56. The section restated former Probate Code Section 1282 (repealed by 1988 Cal. Stat. ch. 1199 § 64.5) without substantive change. For background on the provisions of this part, see the Comment to this part under the part heading.

§ 1003. Appointment of guardian ad litem

Comment. Section 1003 continues Section 1003 of the repealed Probate Code without substantive change. Language has been added to make clear that the section applies in any proceeding under this code. Section 1003 is comparable to Section 1-403(4) of the Uniform Probate Code (1987). As to the construction of provisions drawn from uniform acts, see Section 2. The general provisions for appointment of a guardian ad litem in Code of Civil Procedure Sections 372-373.5 do not apply to the appointment of a guardian ad litem under this code. See Section 1000 (general rules of civil practice apply unless this code provides a different rule). See also Sections 3112, 3140 (appointment of guardian ad litem to represent interest of spouse whose legal capacity for a proposed transaction is to be determined or who lacks legal capacity for a proposed transaction). Section 1003 is not intended to limit any power the court may have to appoint an attorney to represent the interests of an incapacitated person. If a beneficiary has an interest in only part of an estate, the court may not charge expenses to the whole estate, but only to the beneficiary's interest. See Estate of Corotto, 125 Cal. App. 2d 314, 325, 270 P.2d 498 (1954).

Background on Section 1003 of Repealed Code

Section 1003 was a new provision added by 1988 Cal. Stat. ch. 1199 § 56. The section generalized former Probate Code Section 17208 (repealed by 1988 Cal. Stat. ch. 1199 § 107.5) (guardian ad litem in trust proceedings). For background on the provisions of this part, see the Comment to this part under the part heading.

§ 1004. Lis pendens

Comment. Section 1004 continues Section 1004 of the repealed Probate Code without substantive change. Language has been added to make clear that the section applies in any proceeding under this code. This section does not refer to proceedings that "concern" title or the right of possession of real property, as does Code of Civil Procedure Section 409, and thus provides a more restrictive rule than would otherwise apply through the incorporation provision of Section 1000. Other provisions of the Code of Civil Procedure applicable to lis pendens apply under this code by virtue of Section 1000 (general rules of practice). See, e.g., Code Civ. Proc. § 409.1 (expunging lis pendens).

Background on Section 1004 of Repealed Code

Section 1004 was a new provision added by 1988 Cal. Stat. ch. 1199 § 56. Section 1004 generalized former Probate Code Sections 2523 (repealed by 1988 Cal. Stat. ch.

1199 § 69.5) (Guardianship-Conservatorship Law) and 9863 (repealed by 1988 Cal. Stat. ch. 1199 § 88.5) (claims of title in estate administration). For background on the provisions of this part, see the Comment to this part under the part heading.

CHAPTER 2. PETITIONS AND OTHER PAPERS

§ 1020. General requirements for petitions, objections, responses, reports, and accounts

Comment. Section 1020 continues Section 1020 of the repealed Probate Code without substantive change. Language has been added to make clear that the section applies to any of the described documents "filed pursuant to this code." The introductory clause recognizes that the attorney for a nonfiduciary may sign a petition, objection, or response under certain circumstances. See Section 1023. See also Section 9630 (authority of joint personal representatives to act).

Background on Section 1020 of Repealed Code

Section 1020 was a new provision added by 1988 Cal. Stat. ch. 1199 § 56. Section 1020 generalized several former provisions. See, e.g., former Prob. Code §§ 380 (repealed by 1988 Cal. Stat. ch. 1199 § 42) (will contest after probate), 440 (repealed by 1988 Cal. Stat. ch. 1199 § 45) (petition for letters of administration), 522 (repealed by 1988 Cal. Stat. ch. 1199 § 47) (removal of personal representative), 921 (repealed by 1988 Cal. Stat. ch. 1199 § 54.5) (filing of verified account), 1025.5 (repealed by 1988 Cal. Stat. ch. 1199 § 55.5) (report of status of administration). For background on the provisions of this part, see the Comment to this part under the part heading.

§ 1021. Verification required

Comment. Section 1021 continues Section 1021 of the repealed Probate Code without change. In the case of a corporate fiduciary, a responsible person, such as a corporate officer, should verify a report or account. See also Section 10953 (verification of account prepared for dead or incapacitated personal representative upon information and belief).

Background on Section 1021 of Repealed Code

Section 1021 was added by 1988 Cal. Stat. ch. 1199 § 56. The section restated former Probate Code Section 1284 (repealed by 1988 Cal. Stat. ch. 1199 § 64.5) without substantive change. Former Section 1284 had earlier been enacted upon recommendation of the Law Revision Commission by 1987 Cal. Stat. ch. 923 § 60.5. Subdivision (a) of former Section 1284 generalized and superseded provisions formerly found in the repealed Probate Code. Subdivision (b) was new. For background on the provisions of this part, see the Comment to this part under the part heading.

§ 1022. Affidavit or verified petition as evidence

Comment. Section 1022 continues Section 1022 of the repealed Probate Code without change. The declaration of an attorney is admissible as an affidavit under this section. Proceedings under this code include proceedings relating to the administration of estates of decedents

and proceedings relating to the administration of estates of persons for whom a guardian or conservator has been appointed. For other provisions, see Section 204 (use of petition and affidavit in proceeding to establish fact of death). See also Code Civ. Proc. § 2009 (affidavit may be used to establish record of birth).

Background on Section 1022 of Repealed Code

Section 1022 was a new provision added by 1988 Cal. Stat. ch. 1199 § 56. The section generalized the first sentence of the second paragraph of former Probate Code Section 1283 (repealed by 1988 Cal. Stat. ch. 1199 § 64.5). For background on the provisions of this part, see the Comment to this part under the part heading.

§ 1023. Signing and verification by attorney

Comment. Section 1023 continues Section 1023 of the repealed Probate Code without substantive change. Language has been added to make clear the section applies when a petition, objection, or response is "filed pursuant to this code."

Section 1023 provides exceptions to the general rules applicable to signing and verification under Sections 1020 and 1021. Under Section 1023, an attorney may sign or verify papers for a person other than a fiduciary appointed in the particular proceeding to which the papers relate. Thus, for example, a petition filed by the personal representative in a probate proceeding would be covered by the prohibition, but an objection or response to such a petition by the trustee of an inter vivos trust or by the conservator of an heir would not be covered, since neither the trustee nor the conservator is a fiduciary appointed in the probate proceeding.

Section 1023 is drawn in part from Code of Civil Procedure Section 446, but provides a different rule governing the situations where an attorney may make a verification in place of a party. The manner of verification, however, is governed by Code of Civil Procedure Section 446.

Background on Section 1023 of Repealed Code

Section 1023 was a new provision added by 1988 Cal. Stat. ch. 1199 § 56. It was amended by 1989 Cal. Stat. ch. 21 § 4 to prohibit a fiduciary's attorney from verifying papers for the fiduciary. See *Communication from the California Law Revision Commission Concerning Assembly Bill 156*, 20 Cal. L. Revision Comm'n Reports 227, 228-29 (1990). For background on the provisions of this part, see the Comment to this part under the part heading.

CHAPTER 3. HEARINGS AND ORDERS

§ 1040. General hearing procedure

Comment. Section 1040 continues Section 1040 of the repealed Probate Code without change.

Background on Section 1040 of Repealed Code

Section 1040 was a new provision added by 1988 Cal. Stat. ch. 1199 § 56. For background on the provisions of this part, see the Comment to this part under the part heading.

§ 1041. Clerk to set matters for hearing

Comment. Section 1041 continues Section 1041 of the repealed Probate Code without change.

Background on Section 1041 of Repealed Code

Section 1041 was added by 1988 Cal. Stat. ch. 1199 § 56. The section restated former Probate Code Section 1285 (repealed by 1988 Cal. Stat. ch. 1199 § 64.5) without substantive change. Former Section 1285 was earlier enacted upon recommendation of the Law Revision Commission by 1987 Cal. Stat. ch. 923 § 60.5. The section generalized and superseded provisions found in sections of the repealed Probate Code. For background on the provisions of this part, see the Comment to this part under the part heading.

§ 1042. Notice of hearing

Comment. Section 1042 continues Section 1042 of the repealed Probate Code without change. For provisions permitting ex parte hearings, see, e.g., Sections 203 (proceedings to establish fact of death), 8541 (procedure for appointment of special administrator), 9735 (purchase of securities or commodities sold short), 10200 (sale or surrender for redemption or conversion of securities). See also Section 1220(c) (mailed notice dispensed with for good cause). For general provisions relating to notice, see Sections 1200-1265.

Background on Section 1042 of Repealed Code

Section 1042 was a new provision added by 1988 Cal. Stat. ch. 1199 § 56. For background on the provisions of this part, see the Comment to this part under the part heading.

§ 1043. Response or objection

Comment. Section 1043 continues Section 1043 of the repealed Probate Code without change. This section does not apply where a particular statute provides a different procedure. See Section 1040. In the context of a will contest, subdivision (c) means that a potential contestant is not deemed to have contested the will merely because of a request for a continuance for the purpose of determining whether to contest the will.

Background on Section 1043 of Repealed Code

Section 1043 was added by 1988 Cal. Stat. ch. 1199 § 56. Section 1043 superseded a number of former provisions. See, e.g, former Prob. Code §§ 370 (repealed by 1988 Cal. Stat. ch. 1199 § 42) (written grounds of opposition to probate of will), 442 (repealed by 1988 Cal. Stat. ch. 1199 § 45) (opposition to petition for administration), 927 (repealed by 1988 Cal. Stat. ch. 1199 § 54.5) (written exceptions to account), 1041 (repealed by 1988 Cal. Stat. ch. 1199 § 55.5) (written objection to delivery of estate of

nonresident). Subdivision (c) was a new provision. For background on the provisions of this part, see the Comment to this part under the part heading.

§ 1044. Plaintiff and defendant

Comment. Section 1044 continues Section 1044 of the repealed Probate Code without change.

Background on Section 1044 of Repealed Code

Section 1044 was added by 1988 Cal. Stat. ch. 1199 § 56. The section restated the second sentence of former Probate Code Section 1280 (repealed by 1988 Cal. Stat. ch. 1199 § 64.5) without substantive change. For background on the provisions of this part, see the Comment to this part under the part heading.

§ 1045. Continuance or postponement

Comment. Section 1045 continues Section 1045 of the repealed Probate Code without change.

Background on Section 1045 of Repealed Code

Section 1045 was added by 1988 Cal. Stat. ch. 1199 § 56. The section continued former Probate Code Section 1286 (repealed by 1988 Cal. Stat. ch. 1199 § 64.5) without change. For background on the provisions of this part, see the Comment to this part under the part heading.

§ 1046. Hearing and order

Comment. Section 1046 continues Section 1046 of the repealed Probate Code without change.

Background on Section 1046 of Repealed Code

Section 1046 was added by 1988 Cal. Stat. ch. 1199 § 56. The section restated former Probate Code Section 1287 (repealed by 1988 Cal. Stat. ch. 1199 § 64.5) without substantive change. The reference to consideration of evidence generalized part of former Probate Code Section 1103 (repealed by 1988 Cal. Stat. ch. 1199 § 57). Former Section 1287 was earlier enacted upon recommendation of the Law Revision Commission by 1987 Cal. Stat. ch. 923 § 60.5. Section 1287 generalized and superseded a number of former provisions. For background on the provisions of this part, see the Comment to this part under the part heading.

§ 1047. Recital of jurisdictional facts unnecessary

Comment. Section 1047 continues Section 1047 of the repealed Probate Code without change. For an exception to this section, see Section 8006 (jurisdictional facts in court order opening probate). See also Sections 1260 (order finding that notice of hearing was given), 1962 (order authorizing sterilization to be accompanied by a written statement of decision).

Background on Section 1047 of Repealed Code

Section 1047 was added by 1988 Cal. Stat. ch. 1199 § 56. The section restated former Probate Code Section 1290 (repealed by 1988 Cal. Stat. ch. 1199 § 64.5) without substantive change. For background on the provisions of this part, see the Comment to this part under the part heading.

§ 1048. Entry and filing

Comment. Section 1048 continues Section 1048 of the repealed Probate Code without change.

Background on Section 1048 of Repealed Code

Section 1048 was added by 1988 Cal. Stat. ch. 1199 § 56. The section restated former Probate Code Section 1291 (repealed by 1988 Cal. Stat. ch. 1199 § 64.5) and part of the fourth sentence of former Probate Code Section 1280 (repealed by 1988 Cal. Stat. ch. 1199 § 64.5) without substantive change. For background on the provisions of this part, see the Comment to this part under the part heading.

§ 1049. Enforcement of order

Comment. Section 1049 continues Section 1049 of the repealed Probate Code without change. This section elaborates one aspect of Section 1000 (general rules of practice govern). A personal representative may be removed from office if the personal representative is found in contempt for disobeying an order of the court. See Section 8505. See also Sections 20123 (enforcement of estate tax proration order), 20223 (enforcement of order prorating taxes on generation-skipping transfer).

Background on Section 1049 of Repealed Code

Section 1049 was added by 1988 Cal. Stat. ch. 1199 § 56. The section restated part of the last sentence of former Probate Code Section 1280 (repealed by 1988 Cal. Stat. ch. 1199 § 64.5) without substantive change. For background on the provisions of this part, see the Comment to this part under the part heading.

§ 1050. Judgment roll

Comment. Section 1050 continues Section 1050 of the repealed Probate Code without substantive change. A number of revisions have been made to conform to the terminology of the new Probate Code.

Background on Section 1050 of Repealed Code

Section 1050 was added by 1988 Cal. Stat. ch. 1199 § 56. The section restated former Probate Code Section 1299 (repealed by 1988 Cal. Stat. ch. 1199 § 64.5) without substantive change. However, the former provision stating that the papers constituting the judgment roll need not be attached together was omitted as unnecessary. The reference to the statement of decision in subdivision (a)(6) was new. The reference in subdivision (c) of former Section 1299 to partial and ratable distributions was replaced by a reference to preliminary distributions. For background on the provisions of this part, see the Comment to this part under the part heading.

PART 2. NOTICES AND CITATIONS

Comment. This part supersedes Part 2 (commencing with Section 1200) of Division 3 of the repealed Probate Code. The superseded part was enacted upon recommendation of the Law Revision Commission. See *Recommendation Relating to Notice in Probate Proceedings,* 19 Cal. L. Revision Comm'n Reports 357-83 (1988); *Communication from*

California Law Revision Commission Concerning Assembly Bill 708, 19 Cal. L. Revision Comm'n Reports 545, 555-58 (1988). See also *Comments to Conforming Revisions and Repeals,* 19 Cal. L. Revision Comm'n Reports 1031, 1081-82 (1988); *Communication from California Law Revision Commission Concerning Assembly Bill 2841,* 19 Cal. L. Revision Comm'n Reports 1201, 1226 (1988).

CHAPTER 1. GENERAL NOTICE PROVISIONS

§ 1200. Application of part

Comment. Section 1200 continues the substance of Section 1200 of the repealed Probate Code, but does not continue the former provision that this part (with some specific exceptions) did not apply to proceedings under Division 4 (Guardianship-Conservatorship Law) or Division 9 (Trust Law). Except as otherwise provided in this code, this part applies to the entire Probate Code. A noticed hearing is required unless the statute that provides for the hearing dispenses with notice. See Section 1042. Subdivision (b) makes clear that this part does not apply to the extent that a particular notice provision is inconsistent with this part. See, e.g., Sections 8100-8125 (petition for administration of a decedent's estate). Subdivision (c) is a transitional provision continued from the repealed Probate Code section, but the date has been changed to July 1, 1991, so that under subdivision (c) the former law now applies to notices that are first given before July 1, 1991. As to the application of any amendments made after that date, see Section 3.

Background on Section 1200 of Repealed Code

Section 1200 was added by 1987 Cal. Stat. ch. 923 § 60. Subdivision (b) superseded subdivisions (c) and (d) of former Probate Code Section 1200 (repealed by 1987 Cal. Stat. ch. 923 § 59) and subdivisions (d) and (e) of former Probate Code Section 1200.5 (repealed by 1987 Cal. Stat. ch. 923 § 59). The remainder of the section was new. The section was amended by 1989 Cal. Stat. ch. 21 § 5 to make technical changes. See *Communication from the California Law Revision Commission Concerning Assembly Bill 156,* 20 Cal. L. Revision Comm'n Reports 227, 229 (1990). For background on the provisions of this part, see the Comment to this part under the part heading.

§ 1201. Notice not required to be given to oneself or persons joining in petition

Comment. Section 1201 continues Section 1201 of the repealed Probate Code without change. See also Section 1208 (notice where personal representative and trustee are same person). This part does not apply to the giving of a particular notice where the notice was delivered, mailed, posted, or first published before July 1, 1991. See Section 1200(c). As to the application of any amendments made after that date, see Section 3.

Background on Section 1201 of Repealed Code

Section 1201 was a new provision added by 1987 Cal. Stat. ch. 923 § 60. The part of Section 1201 relating to giving notice to oneself was drawn from other provisions in the repealed Probate Code. The part relating to giving notice to another person who joins in a petition was drawn from subdivision (b) of former Probate Code Section 1200.5 (repealed by 1987 Cal. Stat. ch. 923 § 59) (notice to coexecutor or coadministrator not petitioning). For background on the provisions of this part, see the Comment to this part under the part heading.

§ 1202. Additional notice on court order

Comment. Section 1202 continues Section 1202 of the repealed Probate Code without change. This part does not apply to the giving of a particular notice where the notice was delivered, mailed, posted, or first published before July 1, 1991. See Section 1200(c). As to the application of any amendments made after that date, see Section 3.

Background on Section 1202 of Repealed Code

Section 1202 was added by 1987 Cal. Stat. ch. 923 § 60. The section restated former Probate Code Section 1204 (repealed by 1987 Cal. Stat. ch. 923 § 59) without substantive change, using language drawn from subdivision (b) of Section 1462 (Guardianship-Conservatorship Law) of the repealed Probate Code. The section also generalized a provision found in paragraph (4) of subdivision (e) of Section 277 of the repealed Probate Code prior to its amendment by 1987 Cal. Stat. ch. 923 § 24. For background on the provisions of this part, see the Comment to this part under the part heading.

§ 1203. Order shortening time

Comment. Section 1203 continues Section 1203 of the repealed Probate Code with the omission of the provision that referred to giving notice of hearing required by Section 8003 or 9861. Subject to subdivision (b), this section permits the court for good cause to shorten the period for delivery, mailing, or posting of notice of hearing.

The introductory clause recognizes that the court may not shorten the time for giving notice of hearing if the particular provision governing notice of hearing otherwise provides. See Sections 1511 (petition for appointment of a guardian), 1822 (petition for appointment of a conservator), 8003 (petition for appointment of a personal representative or for probate of will or both), 9861 (transfer of property claimed to belong to decedent or other person).

Subdivision (b) makes clear that Section 1203 does not apply to publication of notice under this code. Where the court has authority to shorten the period of publication or to order fewer publications, the particular section providing the manner of publication will expressly so provide.

This part does not apply to the giving of a particular notice where the notice was delivered, mailed, posted, or first published before July 1,

1991. See Section 1200(c). As to the application of any amendments made after that date, see Section 3.

Background on Section 1203 of Repealed Code

Section 1203 was added by 1987 Cal. Stat. ch. 923 § 60 and was amended by 1988 Cal. Stat. ch. 1199 § 59.5. The section was drawn from Sections 1462(a) (Guardianship-Conservatorship Law) and 17106 (Trust Law) of the repealed Probate Code and generalized former provisions. The 1988 amendment corrected cross-references to other sections. For background on the provisions of this part, see the Comment to this part under the part heading.

§ 1204. Waiver of notice

Comment. Section 1204 continues Section 1204 of the repealed Probate Code without change. This section is drawn from Section 1-402 of the Uniform Probate Code (1987). As to the construction of provisions drawn from uniform acts, see Section 2. As to the power of a guardian or conservator to waive any process, notice, or order to show cause on behalf of the ward or conservatee, see Section 1210. This part does not apply to the giving of a particular notice where the notice was delivered, mailed, posted, or first published before July 1, 1991. See Section 1200(c). As to the application of any amendments made after that date, see Section 3. Nothing in this section creates any implication as to the power of an attorney to act with respect to matters other than waiver of notice. See also Section 1023 (verification by attorney of petition, objection, or response).

Background on Section 1204 of Repealed Code

Section 1204 was added by 1987 Cal. Stat. ch. 923 § 60. For background on the provisions of this part, see the Comment to this part under the part heading.

§ 1205. Notice of continued or postponed hearing

Comment. Section 1205 continues Section 1205 of the repealed Probate Code without change. As to the court's authority to continue or postpone a hearing, see Section 1045. This part does not apply to the giving of a particular notice where the notice was delivered, mailed, posted, or first published before July 1, 1991. See Section 1200(c). As to the application of any amendments made after that date, see Section 3.

Background on Section 1205 of Repealed Code

Section 1205 was added by 1987 Cal. Stat. ch. 923 § 60. The section was drawn from part of former Probate Code Section 1205 (repealed by 1987 Cal. Stat. ch. 923 § 59). For background on the provisions of this part, see the Comment to this part under the part heading.

§ 1206. Notice to known heirs or devisees

Comment. Section 1206 continues Section 1206 of the repealed Probate Code without substantive change. This section governs who must be given notice when the statute requires that notice be given to

known heirs or known devisees. Where the estate is partially testate and partially intestate and notice is required to be given to known heirs or known devisees, notice must be given both to known heirs and to known devisees. The court may require additional notice. See Section 1202. The period and manner of notice are governed (1) by the provision that incorporates this section or (2) by Section 1217 and either Section 1220 or Section 1221.

Subdivision (b) is amended to delete the reference to a distributee's written acceptance, which is not implemented in the distribution statutes. The requirement that a receipt be in writing is subject to exceptions in certain cases. See, e.g., Sections 11751, 11753.

This part does not apply to the giving of a particular notice where the notice was delivered, mailed, posted, or first published before July 1, 1991. See Section 1200(c). As to the application of any amendments made after that date, see Section 3.

Background on Section 1206 of Repealed Code

Section 1206 was a new provision added by 1987 Cal. Stat. ch. 923 § 60. This section codified prior practice as to the giving of notice. For background on the provisions of this part, see the Comment to this part under the part heading.

§ 1207. Exceptions to notice requirement involving parent-child relationship

Comment. Section 1207 continues Section 1207 of the repealed Probate Code without change. A stepchild or foster child who is not required to be given notice because of Section 1207 may request special notice under Chapter 6 (commencing with Section 1250). This part does not apply to the giving of a particular notice where the notice was delivered, mailed, posted, or first published before July 1, 1991. See Section 1200(c). As to the application of any amendments made after that date, see Section 3.

Background on Section 1207 of Repealed Code

Section 1207 was added by 1987 Cal. Stat. ch. 923 § 60. The section restated former Probate Code Section 1201 (repealed by 1987 Cal. Stat. ch. 923 § 59) without substantive change. For background on the provisions of this part, see the Comment to this part under the part heading.

§ 1208. Notice to trust beneficiaries where personal representative and trustee are same person

Comment. Section 1208 continues Section 1208 of the repealed Probate Code without change. Subdivision (a) recognizes the general rule that notice is given to the trustee and not to the beneficiaries of the trust where notice is required to be given to devisees and a trust or trustee is a devisee. See Section 34 (trust beneficiaries are not devisees).

Subdivision (b) provides an exception to the general rule provided in subdivision (a). This exception recognizes that notice given by the personal representative to himself or herself as trustee would be meaningless and that, in some cases, the issue involved may present a conflict of interest between the interests of the personal representative and the interests of the trust beneficiaries.

Subdivision (c) makes clear that notice to trust beneficiaries under subdivision (b) is not required if there is a cotrustee who is independent of the estate administration.

This part does not apply to the giving of a particular notice where the notice was delivered, mailed, posted, or first published before July 1, 1991. See Section 1200(c). As to the application of any amendments made after that date, see Section 3.

Background on Section 1208 of Repealed Code

Section 1208 was a new provision added by 1987 Cal. Stat. ch. 923 § 60. For background on the provisions of this part, see the Comment to this part under the part heading.

§ 1209. Notice to State of California or to Attorney General

Comment. Section 1209 continues Section 1209 of the repealed Probate Code without change. This section applies, for example, in a case where notice is required to be given to devisees under a will and the state is a devisee. In this case, the Attorney General is the proper recipient of the notice. This provision does not apply in a case where a specific provision requires notice to be given to some other officer. See, e.g., Section 215 (notice of death to Director of Health Services).

This part does not apply to the giving of a particular notice where the notice was delivered, mailed, posted, or first published before July 1, 1991. See Section 1200(c). As to the application of any amendments made after that date, see Section 3.

Background on Section 1209 of Repealed Code

Section 1209 was added by 1987 Cal. Stat. ch. 923 § 60. Subdivision (a) was new. Subdivision (b) generalized a provision found in the second paragraph of former Probate Code Section 328 before that section was amended by 1987 Cal. Stat. ch. 923 § 29. For background on the provisions of this part, see the Comment to this part under the part heading.

§ 1210. Guardian or conservator acting for ward or conservatee

Comment. Section 1210 continues Section 1210 of the repealed Probate Code without change. See Section 48 ("interested person" defined).

Background on Section 1210 of Repealed Code

Section 1210 was added by 1988 Cal. Stat. ch. 1199 § 60. Section 1210 restated former Probate Code Section 1289 (repealed by 1988 Cal. Stat. ch. 1199 § 64.5)

without substantive change. Former Section 1289 had earlier been enacted upon recommendation of the Law Revision Commission by 1987 Cal. Stat. ch. 923 § 60.5. Former Section 1289 restated former Probate Code Section 1208 (repealed by 1987 Cal. Stat. ch. 923 § 59) without substantive change. For background on the provisions of this part, see the Comment to this part under the part heading.

§ 1211. Form of notice when form not otherwise prescribed

Comment. Section 1211 continues Section 1211 of the repealed Probate Code without change.

Background on Section 1211 of Repealed Code

Section 1211 was added by 1988 Cal. Stat. ch. 113 § 13.3. The section restated the general provisions of former Probate Code Section 1200.1 (repealed by 1987 Cal. Stat. ch. 923 § 59) without substantive change. For background on the provisions of this part, see the Comment to this part under the part heading.

CHAPTER 2. MAILING IN GENERAL

§ 1215. Manner of mailing; when mailing complete

Comment. Section 1215 continues Section 1215 of the repealed Probate Code without substantive change. Subdivision (d) has been revised to make clear that the rule provided by this subdivision is limited to proceedings under this code concerning the administration of a decedent's estate. For the provision governing mailed notice under the Trust Law where the address is not known, see Section 17102. For special notice provisions relating to guardianships and conservatorships, see Sections 1460-1467. See also Section 5 (certified mail sufficient compliance with requirement of use of registered mail).

Deposit for collection in the United States mail includes deposit in a post office, mailbox, subpost office, substation, mail chute, or other like facility regularly maintained by the United States Postal Service.

The introductory clause makes clear that this section does not apply to the extent that the applicable mailing provision expressly provides a different rule. This section does not apply where service is required to be made by mail in the manner authorized in Section 415.30 of the Code of Civil Procedure. See Section 1467 and the Comment thereto. This section does not apply where service is made out-of-state in the manner provided in Section 415.40 of the Code of Civil Procedure. See Code Civ. Proc. § 415.40.

Subdivision (e) makes clear that the applicable period of notice is not extended where a notice or other paper is mailed. A particular provision may provide a different rule. E.g., Section 10586 (notice of proposed action in independent administration).

This part does not apply to the giving of a particular notice where the notice was delivered, mailed, posted, or first published before July 1,

1991. See Section 1200(c). As to the application of any amendments made after that date, see Section 3.

Background on Section 1215 of Repealed Code

Section 1215 was a new provision added by 1987 Cal. Stat. ch. 923 § 60. The section was amended by 1988 Cal. Stat. ch. 1199 § 60.7. The section was drawn in part from Section 1465 (Guardianship-Conservatorship Law) of the repealed Probate Code and also generalized part of former Probate Code Section 328 (repealed by 1988 Cal. Stat. ch. 1199 § 40).

The 1988 amendment simplified the reference in subdivision (c) to various facilities maintained by the United States Postal Service to be consistent with contemporary usage, relettered subdivision (d) as subdivision (e), and added a new subdivision (d) for completeness. Subdivision (d) was drawn from subdivision (d), now subdivision (a)(3), of Section 1220.

For background on the provisions of this part, see the Comment to this part under the part heading.

§ 1216. Personal delivery instead of mailing

Comment. Section 1216 continues Section 1216 of the repealed Probate Code without change.

This part does not apply to the giving of a particular notice where the notice was delivered, mailed, posted, or first published before July 1, 1991. See Section 1200(c). As to the application of any amendments made after that date, see Section 3.

Background on Section 1216 of Repealed Code

Section 1216 was a new provision added by 1987 Cal. Stat. ch. 923 § 60. Subdivision (a) was drawn from Section 1466 (Guardianship-Conservatorship Law) of the repealed Probate Code. For background on the provisions of this part, see the Comment to this part under the part heading.

§ 1217. Mailed notice where no other manner of giving notice specified

Comment. Section 1217 continues Section 1217 of the repealed Probate Code without change. Where notice of a hearing is required but no other manner of giving notice is prescribed by statute, notice shall be given as provided in Section 1217 and either Section 1220 or Section 1221.

This part does not apply to the giving of a particular notice where the notice was delivered, mailed, posted, or first published before July 1, 1991. See Section 1200(c). As to the application of any amendments made after that date, see Section 3.

Background on Section 1217 of Repealed Code

Section 1217 was a new provision added by 1987 Cal. Stat. ch. 923 § 60. The section was amended by 1989 Cal. Stat. ch. 21 § 6 to make a technical change. See *Communication from the California Law Revision Commission Concerning Assembly Bill 156*, 20 Cal. L. Revision Comm'n Reports 227, 229 (1990). For background on the provisions of this part, see the Comment to this part under the part heading.

CHAPTER 3. MAILING NOTICE OF HEARING

§ 1220. General manner of mailing notice of hearing

Comment. Section 1220 continues subdivisions (a)(1) and (b)-(f) of Section 1220 of the repealed Probate Code without substantive change. As revised, Section 1220 applies only where another statute requires notice of hearing to be given as provided in Section 1220. The substance of the remainder of Section 1220 of the repealed Probate Code (governing the giving of notice where notice of hearing is required but no other period or manner is prescribed by statute) is continued in Section 1221. For general provisions relating to notice, see Sections 1200-1211. For provisions relating to mailing, see Sections 1215-1217.

Subdivision (b) makes clear that notice must be given to persons who have requested special notice, but language has been added to subdivision (b) to recognize that subdivision (c) permits the court to dispense with notice to a person who has requested special notice. See Section 1252 (notice required to be given to person requesting special notice).

Under subdivision (c), the court may dispense with notice to a person listed in this section or to a person who has requested special notice. However, another statutory provision may limit the extent to which the court may dispense with notice in proceedings under that provision. See, e.g., Section 11623 (petition for order for preliminary distribution).

The person required to give notice by mail as provided in this section can satisfy that requirement by personal delivery of the notice to the person required to be given the notice. See Section 1216. As to shortening the time of notice, see Section 1203. The court may order additional notice. See Section 1202.

This part does not apply to the giving of a particular notice where the notice was delivered, mailed, posted, or first published before July 1, 1991. See Section 1200(c). As to the application of any amendments made after that date, see Section 3.

Background on Section 1220 of Repealed Code

Section 1220 was added by 1987 Cal. Stat. ch. 923 § 60 and was amended by 1988 Cal. Stat. ch. 1199 § 61.3. The section superseded subdivisions (a) and (b) of former Probate Code Section 1200.5 (repealed by 1987 Cal. Stat. ch. 923 § 59). The list of petitions found in subdivision (a) of former Section 1200.5 was omitted as unnecessary; the provision that relates to the particular petition was revised to include a specific requirement in that provision that notice of hearing be given as provided in new Section 1220.

Subdivisions (b) and (c) continued a portion of subdivision (b) of former Probate Code Section 1200.5, but the time for mailing the notice was increased from 10 to 15 days before the time set for the hearing. In addition, the requirement of subdivision (b) of former Section 1200.5 that notice be given to all persons who have requested notice was omitted from subdivision (b) of Section 1220 as unnecessary.

Subdivision (d) restated part of subdivision (b) of former Probate Code Section 1200.5 without substantive change. Subdivisions (e) and (f) were new provisions drawn from Section 1460 (Guardianship-Conservatorship Law) of the repealed Probate Code. Subdivision (f) generalized provisions of former Probate Code Sections 584.2 (repealed by 1987 Cal. Stat. ch. 923 § 35) and 860 (repealed by 1987 Cal. Stat. ch. 923 § 41).

The 1988 amendment revised subdivision (d) of Section 1220 to conform to Section 1215(d).

The section was amended by 1989 Cal. Stat. ch. 21 § 7 to make a technical change. See *Communication from the California Law Revision Commission Concerning Assembly Bill 156*, 20 Cal. L. Revision Comm'n Reports 227, 229 (1990).

For background on the provisions of this part, see the Comment to this part under the part heading.

§ 1221. Period and manner of giving notice of hearing where not otherwise prescribed by statute

Comment. Section 1221 is a new provision that continues the substance of paragraph (2) of subdivision (a) of Section 1220 of the repealed Probate Code. This part does not apply to the giving of a particular notice where the notice was delivered, mailed, posted, or first published before July 1, 1991. See Section 1200(c). As to the application of any amendments made after that date, see Section 3.

CHAPTER 4. POSTING NOTICE OF HEARING

§ 1230. Manner of posting notice of hearing

Comment. Section 1230 continues Section 1230 of the repealed Probate Code without change. This part does not apply to the giving of a particular notice where the notice was delivered, mailed, posted, or first published before July 1, 1991. See Section 1200(c). As to the application of any amendments made after that date, see Section 3.

Background on Section 1230 of Repealed Code

Section 1230 was added by 1987 Cal. Stat. ch. 923 § 60. The section restated subdivision (a) of former Probate Code Section 1200 and all of former Probate Code Section 1210 (provisions repealed by 1987 Cal. Stat. ch. 923 § 59) with the following significant revisions:

(1) Former Section 1200 listed the petitions to which the posting requirement applied. This list was not continued in Section 1230. Instead, a reference to Section 1230 was included in each provision that provided for notice by posting.

(2) Former Section 1200 required posting at least 10 days before the hearing. Section 1230 required posting at least 15 days before the hearing. The 15-day posting requirement conformed to the requirement that notice be mailed 15 days before the hearing. See Section 1220.

(3) The portion of former Section 1200 requiring the clerk to set the petition for hearing by the court was omitted as unnecessary in view of the general provision imposing this requirement. See Section 1041 (clerk to set petitions for hearing).

CHAPTER 5. CITATIONS

§ 1240. Issuance of citation

Comment. Section 1240 continues Section 1240 of the repealed Probate Code without substantive change. The section has been revised to make clear that a citation may be issued by the court clerk without a court order only where use of a citation is authorized or required by statute.

Background on Section 1240 of Repealed Code

Section 1240 was added by 1987 Cal. Stat. ch. 923 § 60. The section restated the first sentence of former Probate Code Section 1207 (repealed by 1987 Cal. Stat. ch. 923 § 59) without substantive change. For background on the provisions of this part, see the Comment to this part under the part heading.

§ 1241. Contents of citation

Comment. Section 1241 continues Section 1241 of the repealed Probate Code without change.

Background on Section 1241 of Repealed Code

Section 1241 was added by 1987 Cal. Stat. ch. 923 § 60. The section restated the second sentence of former Probate Code Section 1206 (repealed by 1987 Cal. Stat. ch. 923 § 59) without substantive change. For background on the provisions of this part, see the Comment to this part under the part heading.

§ 1242. Service of citation

Comment. Section 1242 continues Section 1242 of the repealed Probate Code without substantive change.

Background on Section 1242 of Repealed Code

Section 1242 was added by 1987 Cal. Stat. ch. 923 § 60. The section restated the second sentence of former Probate Code Section 1207 (repealed by 1987 Cal. Stat. ch. 923 § 59) without substantive change. For background on the provisions of this part, see the Comment to this part under the part heading.

CHAPTER 6. REQUEST FOR SPECIAL NOTICE

§ 1250. Request for special notice

Comment. Section 1250 continues Section 1250 of the repealed Probate Code without substantive change. Language has been added to the first sentence of subdivision (a) to make clear that the section applies only in a proceeding under this code for the administration of a decedent's estate. This chapter does not apply to proceedings under Division 4 (commencing with Section 1400) (Guardianship-Conservatorship Law) or Division 9 (commencing with Section 15000) (Trust Law).

If a request for special notice is made as provided in this section, notice is required to be given as provided in Section 1252. Subdivision (c) permits the person requesting special notice to request notice of the

matters described in that subdivision. The described matters include all petitions and specified additional matters. Subdivision (d) gives the person requesting special notice the option to describe specifically those matters of which special notice is requested if the person does not wish to receive special notice of all matters.

Where the State Controller has an interest in the estate, the State Controller would be included within the persons who can request special notice as a person "otherwise interested." As to the right of a federal agency to request special notice, see Section 7280.

Subdivision (e) requires that the request for special notice be given to the personal representative or the personal representative's attorney. As to the manner of giving notice, see Sections 1220, 1221. As to proof of giving notice, see Section 1260.

This part does not apply to the giving of a particular notice where the notice was delivered, mailed, posted, or first published before July 1, 1991. See Section 1200(c). As to the application of any amendments made after that date, see Section 3.

Background on Section 1250 of Repealed Code

Section 1250 was added by 1987 Cal. Stat. ch. 923 § 60 and was amended by 1988 Cal. Stat. ch. 1199 § 63. The section replaced parts of former Probate Code Sections 1202 and 1202.5 (both repealed by 1987 Cal. Stat. ch. 923 § 59).

Section 1250 corrected a defect in former Probate Code Section 1202. Former Section 1202 provided for special notice of only those petitions mentioned in former Section 1200. But in 1980, provisions in former Section 1200 applying to notice by mail were split out of that section and added to the then newly-enacted Section 1200.5. See 1980 Cal. Stat. ch. 955 § 31. Many sections containing cross-references to the mailed notice provisions of former Section 1200 were revised to refer to Section 1200.5, but not all cross-references were corrected. Former Section 1202 was not amended to reflect the fact that, after the 1980 revision, giving notice of most petitions by mail was made under Section 1200.5, rather than under Section 1200. As a result, former Section 1202 (which provided for special notice of only those petitions mentioned in Section 1200) did not on its face require special notice of the petitions mentioned in former Section 1200.5 but not mentioned in former Section 1200. Therefore, by its terms, former Section 1202 provided for special notice only by posting, and only for petitions that were still mentioned in former Section 1200.

Subdivision (a) omitted as unnecessary the specific reference to the State Controller that was found in former Probate Code Section 1202. See the Comment to Section 1250.

The 1988 amendment to Section 1250 made technical, nonsubstantive revisions.

For background on the provisions of this part, see the Comment to this part under the part heading.

§ 1251. Modification or withdrawal of request for special notice

Comment. Section 1251 continues Section 1251 of the repealed Probate Code without substantive change. This section is comparable to part of subdivision (a) of Section 2701 (Guardianship-Conservatorship Law).

This section does not apply to proceedings under Division 4 (commencing with Section 1400) (Guardianship-Conservatorship Law) or Division 9 (commencing with Section 15000) (Trust Law). See Section 1250 (chapter applies in a proceeding under this code for the administration of a decedent's estate). This part does not apply to the giving of a particular notice where the notice was delivered, mailed, posted, or first published before July 1, 1991. See Section 1200(c). As to the application of any amendments made after that date, see Section 3.

Background on Section 1251 of Repealed Code

Section 1251 was a new provision added by 1987 Cal. Stat. ch. 923 § 60. For background on the provisions of this part, see the Comment to this part under the part heading.

§ 1252. Notice to be given to person requesting special notice

Comment. Section 1252 continues Section 1252 of the repealed Probate Code without substantive change. The introductory clause is added to subdivision (a) to recognize the authority of the court to dispense with notice in certain cases. See, e.g., Section 1220(b)-(c). This section is comparable to Section 2702 (Guardianship-Conservatorship Law). The 15-day period for special notice is consistent with the general period of notice provided in Section 1220 (notice of hearing by mail). The 15-day period may be reduced by an order shortening time. See Section 1203. See also Section 1204 (waiver of notice).

This section does not apply to proceedings under Division 4 (commencing with Section 1400) (Guardianship-Conservatorship Law) or Division 9 (commencing with Section 15000) (Trust Law). See the introductory clause of subdivision (a) of Section 1250. This part does not apply to the giving of a particular notice where the notice was delivered, mailed, posted, or first published before July 1, 1991. See Section 1200(c). As to the application of any amendments made after that date, see Section 3.

Background on Section 1252 of Repealed Code

Section 1252 was added by 1987 Cal. Stat. ch. 923 § 60 and was amended by 1988 Cal. Stat. ch. 1199 § 63.5. The section replaced the last sentence of former Probate Code Section 1202 and the second sentence of former Probate Code Section 1202.5 (both provisions repealed by 1987 Cal. Stat. ch. 923 § 59). The requirement that a copy of the appropriate papers be served was new. The 10-day notice period of former Section 1202.5 was replaced by a 15-day period. The 1988 amendment to Section 1252 made technical, nonsubstantive revisions. For background on the provisions of this part, see the Comment to this part under the part heading.

CHAPTER 7. PROOF OF GIVING NOTICE

§ 1260. Proof of giving notice of hearing required; conclusiveness of order

Comment. Section 1260 continues Section 1260 of the repealed Probate Code without change. This part does not apply to the giving of a particular notice where the notice was delivered, mailed, posted, or first published before July 1, 1991. See Section 1200(c). As to the application of any amendments made after that date, see Section 3.

Background on Section 1260 of Repealed Code

Section 1260 was added by 1987 Cal. Stat. ch. 923 § 60. Section 1260 was drawn from subdivision (b) of former Probate Code Section 1200 and subdivision (c) of former Probate Code Section 1200.5 (both provisions repealed by 1987 Cal. Stat. ch. 923 § 59).

Subdivision (a) superseded provisions formerly found in various sections of the Probate Code. See, e.g., former Prob. Code §§ 333(c) (repealed by 1988 Cal. Stat. ch. 1199 § 40), 584.3(d) (repealed by 1987 Cal. Stat. ch. 923 § 35), 852 (repealed by 1987 Cal. Stat. ch. 923 § 41), and 1202.5 (repealed by 1987 Cal. Stat. ch. 923 § 59). Subdivision (a) added the requirement that proof of notice be made either at or before the hearing. This was consistent with existing practice.

Subdivision (b) of Section 1260 restated without substantive change parts of former Probate Code Sections 1200(b) and 1200.5(c) (both provisions repealed by 1987 Cal. Stat. ch. 923 § 59). The provision for waiver of notice was drawn from case law. See Estate of Poder, 274 Cal. App. 2d 786, 791-92, 79 Cal. Rptr. 484 (1969); Estate of Pailhe, 114 Cal. App. 2d 658, 662, 251 P.2d 76 (1952); Estate of Palm, 68 Cal. App. 2d 204, 213-14, 156 P.2d 62 (1945); In re Estate of Pierce, 28 Cal. App. 2d 8, 11-12, 81 P.2d 1037 (1938). See also Section 1204 (waiver of notice).

Subdivision (c) restated the rule of conclusiveness of the finding by the court concerning the giving of notice, which was found in former Sections 1200(b) and 1200.5(c) (both provisions repealed by 1987 Cal. Stat. ch. 923 § 59), without substantive change.

For background on the provisions of this part, see the Comment to this part under the part heading.

§ 1261. Proof of mailing

Comment. Section 1261 continues Section 1261 of the repealed Probate Code without change. This part does not apply to the giving of a particular notice where the notice was delivered, mailed, posted, or first published before July 1, 1991. See Section 1200(c). As to the application of any amendments made after that date, see Section 3.

Background on Section 1261 of Repealed Code

Section 1261 was a new provision added by 1987 Cal. Stat. ch. 923 § 60.

§ 1262. Proof of publication

Comment. Section 1262 continues Section 1262 of the repealed Probate Code without change. A declaration under penalty of perjury may be used instead of an affidavit. See Code Civ. Proc. § 2015.5; see

also Code Civ. Proc. § 2015.6 (affirmation instead of oath). This part does not apply to the giving of a particular notice where the notice was delivered, mailed, posted, or first published before July 1, 1991. See Section 1200(c). As to the application of any amendments made after that date, see Section 3.

Background on Section 1262 of Repealed Code

Section 1262 was a new provision added by 1987 Cal. Stat. ch. 923 § 60. For background on the provisions of this part, see the Comment to this part under the part heading.

§ 1263. Proof of posting

Comment. Section 1263 continues Section 1263 of the repealed Probate Code without change. A declaration under penalty of perjury may be used instead of an affidavit. See Code Civ. Proc. § 2015.5; see also Code Civ. Proc. § 2015.6 (affirmation instead of oath). This part does not apply to the giving of a particular notice where the notice was delivered, mailed, posted, or first published before July 1, 1991. See Section 1200(c). As to the application of any amendments made after that date, see Section 3.

Background on Section 1263 of Repealed Code

Section 1263 was a new provision added by 1987 Cal. Stat. ch. 923 § 60. For background on the provisions of this part, see the Comment to this part under the part heading.

§ 1264. Proof of personal delivery

Comment. Section 1264 continues Section 1264 of the repealed Probate Code without change. A declaration under penalty of perjury may be used instead of an affidavit. See Code Civ. Proc. § 2015.5; see also Code Civ. Proc. § 2015.6 (affirmation instead of oath). This part does not apply to the giving of a particular notice where the notice was delivered, mailed, posted, or first published before July 1, 1991. See Section 1200(c). As to the application of any amendments made after that date, see Section 3.

Background on Section 1264 of Repealed Code

Section 1264 was a new provision added by 1987 Cal. Stat. ch. 923 § 60. For background on the provisions of this part, see the Comment to this part under the part heading.

§ 1265. Proof by testimony at hearing

Comment. Section 1265 continues Section 1265 of the repealed Probate Code without change. This part does not apply to the giving of a particular notice where the notice was delivered, mailed, posted, or first published before July 1, 1991. See Section 1200(c). As to the application of any amendments made after that date, see Section 3.

Background on Section 1265 of Repealed Code

Section 1265 was a new provision added by 1987 Cal. Stat. ch. 923 § 60. For background on the provisions of this part, see the Comment to this part under the part heading.

DIVISION 4. GUARDIANSHIP, CONSERVATORSHIP, AND OTHER PROTECTIVE PROCEEDINGS

PART 1. DEFINITIONS AND GENERAL PROVISIONS

Comment. This part supersedes Part 1 (commencing with Section 1400) of Division 4 of the repealed Probate Code. The superseded part was enacted upon recommendation of the California Law Revision Commission. See *Recommendation Relating to Guardianship-Conservatorship Law,* 14 Cal. L. Revision Comm'n Reports 501 (1978). For the Guardianship-Conservatorship Law as enacted in 1979 (Chapter 726 of the Statutes of 1979) with the revisions made by Chapters 89 and 246 of the Statutes of 1980, see *Guardianship-Conservatorship Law,* 15 Cal. L. Revision Comm'n Reports 451 (1980).

CHAPTER 1. SHORT TITLE AND DEFINITIONS

§ 1400. Short title

Comment. Section 1400 is a new provision, not found in the repealed Probate Code. For background on the provisions of this part, see the Comment to this part under the part heading.

§ 1401. Application of definitions

Comment. Section 1401 restates Section 1400 of the repealed Probate Code without substantive change. For background on the provisions of this part, see the Comment to this part under the part heading.

§ 1403. "Absentee"

Comment. Section 1403 continues Section 1403 of the repealed Probate Code without change. "Secretary concerned" is defined in Section 1440. For background on the provisions of this part, see the Comment to this part under the part heading.

§ 1418. "Court"

Comment. Section 1418 continues Section 1418 of the repealed Probate Code without change. This definition does not apply where the context otherwise requires. See Section 1401. For examples of where the context otherwise requires, see Sections 2216, 2803. For background on the provisions of this part, see the Comment to this part under the part heading.

§ 1419. "Court investigator"

Comment. Section 1419 continues Section 1419 of the repealed Probate Code without change. For background on the provisions of this part, see the Comment to this part under the part heading.

§ 1420. "Developmental disability"

Comment. Section 1420 continues Section 1420 of the repealed Probate Code without substantive change. For background on the provisions of this part, see the Comment to this part under the part heading.

§ 1424. "Interested person"

Comment. Section 1424 continues Section 1424 of the repealed Probate Code without change. This section makes clear that a public officer or employee or a public entity may be an interested person for the purposes of this division. See also Section 1461 (notice to Director of Mental Health or Director of Developmental Services) and the Comment thereto. For background on the provisions of this part, see the Comment to this part under the part heading.

§ 1430. "Petition"

Comment. Section 1430 continues Section 1430 of the repealed Probate Code without change. For background on the provisions of this part, see the Comment to this part under the part heading. For general provisions relating to petitions and other papers, see Sections 1020-1023.

§ 1431. "Proceedings to establish a limited conservatorship"

Comment. Section 1431 continues Section 1431 of the repealed Probate Code without change. For background on the provisions of this part, see the Comment to this part under the part heading.

§ 1440. "Secretary concerned"

Comment. Section 1440 continues Section 1440 of the repealed Probate Code without substantive change. For background on the provisions of this part, see the Comment to this part under the part heading.

§ 1446. "Single-premium deferred annuity"

Comment. Section 1446 continues Section 1446 of the repealed Probate Code without change. For background on the provisions of this part, see the Comment to this part under the part heading.

CHAPTER 2. GENERAL PROVISIONS

§ 1452. Trial by jury

Comment. Section 1452 continues Section 1452 of the repealed Probate Code without change. There is a right to a jury trial in a hearing on a petition for establishment of a conservatorship (see Section 1827), for termination of conservatorship (see Section 1863), and for modification of the powers of a limited conservator (Section 2351.5(c)). For background on the provisions of this part, see the Comment to this part under the part heading.

§ 1453. When motion for new trial allowed

Comment. Section 1453 continues Section 1453 of the repealed Probate Code without change. For background on the provisions of this part, see the Comment to this part under the part heading.

§ 1454. Appointment of court investigator

Comment. Section 1454 continues Section 1454 of the repealed Probate Code without change. For background on the provisions of this part, see the Comment to this part under the part heading. See also *Report of Assembly Committee on Judiciary on Assembly Bills Nos. 261 and 167,* reprinted in 15 Cal. L. Revision Comm'n Reports 1061-67 (1980).

CHAPTER 3. NOTICES

§ 1460. Notice of hearings generally

Comment. Section 1460 continues Section 1460 of the repealed Probate Code with revisions that permit the court for good cause to dispense with notice to a person who has requested special notice. A reference to Sections 1202 and 1203 has been substituted for the reference to Section 1462, the substance of former Section 1462 now being found in Sections 1202 and 1203. The phrase "other than the petitioner or persons joining in the petition" has been omitted from subdivision (b), this phrase being unnecessary in view of Section 1201. The reference in subdivision (c) to the courthouse of the county of the court where the proceedings are pending has been omitted as unnecessary in view of comparable provision in subdivision (a) of Section 1230.

For general provisions relating to notice of hearing, see Sections 1200-1221. Where the court determines that the notice otherwise required is insufficient under the particular circumstances, the court may require that further or additional notice be given. See Section 1202. The court may for good cause shorten or lengthen the 15-day notice required by this section. See Sections 1202, 1203. A petitioner need not give notice of himself or herself or to persons joining in the petition. See Section 1201.

The court may dispense with the required notice where good cause is shown. See subdivision (e). This authority permits the court to dispense with notice, for example, where the person specified to receive the notice is in such mental or physical condition that giving the person notice would be useless or detrimental to the person or where, after the exercise of reasonable diligence, the whereabouts of the person is unknown.

Any interested person may receive notice of hearing on all petitions or notice of hearing of certain specified matters by filing and serving a request for special notice under Section 2700. Subdivision (d) makes

clear that the provisions of this section have no effect on the requirements for notice to a person who has requested special notice. See Section 2700 and the Comment thereto. However, subdivision (e) permits the court for good cause to dispense with notice to a person who has requested special notice.

Section 1460 does not deal with the effect of giving notice or the failure to receive notice. See Section 1260(c) (conclusiveness of order concerning notice) and the Comment thereto. Proof of the giving of notice must be made at or before the hearing as provided in Sections 1260-1265. For background on the provisions of this part, see the Comment to this part under the part heading. See also *Report of Senate Committee on Judiciary on Assembly Bill No. 261*, reprinted in 15 Cal. L. Revision Comm'n Reports 1097-99 (1980).

§ 1461. Notice to Director of Mental Health or Director of Developmental Services

Comment. Section 1461 continues Section 1461 of the repealed Probate Code without substantive change. The exception for a petition, report, or account filed by the director in the introductory clause of subdivision (b) has been omitted as unnecessary in view of Section 1201.

The following provisions, listed in paragraph (2) of subdivision (b), require a notice in cases where the condition in paragraph (1) of subdivision (b) exists:

Section 1510 (petition for appointment of guardian)

Section 1820 (petition for appointment of conservator)

Section 1861 (petition for termination of conservatorship)

Section 2212 (petition for change of venue)

Section 2403 (authorization and instructions or approval and confirmation by court for guardian or conservator of estate)

Section 2421 (petition for allowance for ward or conservatee)

Section 2422 (petition for support of ward or conservatee out of the estate notwithstanding existence of person legally obligated to provide support)

Section 2423 (petition for payment of surplus income to relatives of conservatee)

Article 7 (commencing with Section 2540) of Chapter 6 of Part 4 (petitions for sales)

Section 2580 (substituted judgment)

Section 2592 (independent exercise of powers)

Section 2620 (presentation of account for settlement and allowance)

Chapter 9.5 (commencing with Section 2670) (appointment of successor guardian or conservator)

Sections 3080 and 3088 (enforcement of support for spouse who has conservator)

Chapter 3 (commencing with Section 3100) of Part 6 (special proceeding to authorize transaction involving community property)

For other provisions concerning notice to the Director of Mental Health or the Director of Developmental Services, see Sections 2611 (inventory and appraisal), 2621 (hearing on accounts). See also Section 1542 (notice of petition for nonrelative guardianship to Director of Social Services). Where the Director of Mental Health or the Director of Developmental Services is an interested person (Section 1424), a request for special notice may be filed under Section 2700. For general provisions relating to notice, see Sections 1200-1230. See also Sections 1260-1265 (proof of giving notice). For background on the provisions of this part, see the Comment to this part under the part heading. See also *Recommendation Relating to Revision of the Guardianship-Conservatorship Law,* 15 Cal. L. Revision Comm'n Reports 1463, 1473-74 (1980); *Report of Assembly Committee on Judiciary on Assembly Bills Nos. 261 and 167,* reprinted in 15 Cal. L. Revision Comm'n Reports 1061-67 (1980).

§ 1461.4. Notice to director of regional center

Comment. Section 1461.4 continues Section 1461.4 of the repealed Probate Code without change. For background on the provisions of this part, see the Comment to this part under the part heading.

§ 1461.5. Notice to Veterans Administration

Comment. Section 1461.5 continues Section 1461.5 of the repealed Probate Code without substantive change. The exception for a petition filed by the Veterans Administration in the introductory clause of the section has been omitted as unnecessary in view of Section 1201. For general provisions relating to notice, see Sections 1200-1230. See also Sections 1260-1265 (proof of giving notice). For the recommendation of the California Law Revision Commission that resulted in the repeal of the Uniform Veterans Guardianship Act and the enactment of this section of the repealed Probate Code, see *Recommendation Relating to Uniform Veterans Guardianship Act,* 15 Cal. L. Revision Comm'n Reports 1289 (1980). For additional background on the provisions of this part, see the Comment to this part under the part heading. See also *Recommendation Relating to Revision of the Guardianship-Conservatorship Law,* 15 Cal. L. Revision Comm'n Reports 1463, 1474 (1980)

§ 1461.7. Notice of time and place of hearing on petition, report, or account where conservatee is a missing person

Comment. Section 1461.7 continues Section 1461.7 of the repealed Probate Code without change. For the recommendation of the California Law Revision Commission that resulted in the enactment of this section of the repealed Probate Code, see *Recommendation Relating to Missing Persons,* 16 Cal. L. Revision Comm'n Reports 105 (1982). For additional background on the provisions of this part, see the Comment to this part under the part heading.

§ 1467. When service by mail deemed complete

Comment. Section 1467 continues Section 1467 of the repealed Probate Code without change. This section makes clear that, when service is made under this division in the manner authorized in Section 415.30 of the Code of Civil Procedure, the service is complete on the date the acknowledgment of receipt is executed. This section does not include the requirement found in Section 415.30 that the acknowledgment be returned "to the sender." It is sufficient if proof is made that the person served (or a person authorized to acknowledge service on behalf of such person) did execute a written acknowledgment of receipt. For example, service is complete under Section 1467 if the written acknowledgment is returned to a person other than the sender.

This section applies only where *service* is made by mail in the manner authorized in Section 415.30. This section does not apply where a provision of this division merely requires that a notice or other paper be mailed. In the latter case, the applicable provision ordinarily is satisfied when the notice or other paper is deposited in the mail. See Section 1215.

For background on the provisions of this part, see the Comment to this part under the part heading.

§ 1469. Reference to Section 1220 considered a reference to this chapter

Comment. Section 1469 continues Section 1469 of the repealed Probate Code with the omission of the reference to Section 1230. The reference to Section 1230 has been omitted as unnecessary in view of the revision of Section 1460(c). Section 1469 ensures that the notice provisions contained in this chapter will be used in all proceedings under this division. Section 2543 adopts the procedures applicable to personal representatives for manner of sale for sales under this division. The manner of sale procedures applicable to the personal representative require giving of notice as provided in Section 1220 (notice provision applicable to proceedings with respect to estates of decedents). However,

Section 1469 provides that notice is to be given under this chapter rather than as provided in that section. See also Section 2100 (law governing where no specific provision of this division applicable). For background on the provisions of this part, see the Comment to this part under the part heading. See also *Report of Assembly Committee on Judiciary on Assembly Bills Nos. 261 and 167,* reprinted in 15 Cal. L. Revision Comm'n Reports 1061, 1063-64 (1980); *Comments to Conforming Revisions and Repeals,* 19 Cal. L. Revision Comm'n Reports 391, 444 (1988).

CHAPTER 4. APPOINTMENT OF LEGAL COUNSEL

§ 1470. Discretionary appointment of legal counsel

Comment. Section 1470 continues Section 1470 of the repealed Probate Code without change. This section gives the court discretionary authority to appoint legal counsel in guardianship and conservatorship proceedings. The court's authority to appoint counsel in a guardianship proceeding involving custody of a minor is comparable to the court's authority to appoint counsel for a minor in a child custody proceeding under the Family Law Act. See Civil Code § 4606. As to the duty of the public defender to represent an indigent upon request or upon order of court, see Gov't Code § 27706. For background on the provisions of this part, see the Comment to this part under the part heading.

§ 1471. Mandatory appointment of legal counsel

Comment. Section 1471 continues Section 1471 of the repealed Probate Code without substantive change. This section specifies those instances where appointment of counsel is required under this division. Compensation of counsel appointed under Section 1471 is governed by Section 1472.

Subdivision (b) requires appointment of legal counsel in the cases listed in subdivision (a) where the conservatee or proposed conservatee does not request the appointment but the court determines that the appointment would be helpful to the resolution of the matter or is necessary to protect the interests of the conservatee or proposed conservatee. Although the court is given discretionary authority under Section 1470 to appoint legal counsel where the court determines that the appointment would be helpful to the resolution of the matter or is necessary to protect a person's interests, the appointment under Section 1471(b) is mandatory and makes Section 1472 applicable. Sections 1471-1472 permit appointment of the public defender, compensation of legal counsel by the county in cases where the person furnished counsel is determined by the court to lack the ability to pay, and installment

payments. These provisions are not found in Section 1470 which provides for discretionary appointment of private legal counsel.

Appointment of the public defender or private counsel under Sections 1471-1472 is also required under some circumstances in a proceeding under Section 1852 (removal of conservator, restoration of conservatee's right to register to vote, making, modification, or revocation of order affecting conservatee's legal capacity, termination of conservatorship), 2357 (authorization of medical treatment for ward or conservatee), Chapter 3 (commencing with Section 3100) of Part 6 (transaction involving community property—Section 3140), or Part 7 (commencing with Section 3200) (authorization of medical treatment of an adult who does not have conservator of the person—Section 3205). See also Gov't Code § 27706 (duty of public defender to represent indigent person). For background on the provisions of this part, see the Comment to this part under the part heading. See also *Report of Assembly Committee on Judiciary on Assembly Bills Nos. 261 and 167,* reprinted in 15 Cal. L. Revision Comm'n Reports 1061, 1064-65 (1980).

§ 1472. Compensation of mandatory court-appointed counsel

Comment. Section 1472 continues Section 1472 of the repealed Probate Code without substantive change. The reference to homestead property in subdivision (a)(3) has been omitted because the statutory proceeding referred to in that paragraph applies only to community property.

Section 1472 applies where legal counsel is appointed under Section 1471. This section also applies where legal counsel is appointed under Section 1852 (removal of conservator, restoration of conservatee's right to register to vote, making, modification, or revocation of order affecting conservatee's legal capacity, termination of conservatorship), 2357 (authorization of medical treatment for ward or conservatee), 3140 (transaction involving community property) or 3205 (authorization of medical treatment for adult without conservator). For background on the provisions of this part, see the Comment to this part under the part heading. See also *Report of Assembly Committee on Judiciary on Assembly Bills Nos. 261 and 167,* reprinted in 15 Cal. L. Revision Comm'n Reports 1061, 1065 (1980).

CHAPTER 5. TRANSITIONAL PROVISIONS

§ 1488. Effect of nomination by adult of guardian for such adult

Comment. Section 1488 continues Section 1488 of the repealed Probate Code without substantive change. This section ensures that a nomination of a guardian made under former Probate Code Section 1463

(repealed by 1979 Cal. Stat. ch. 726, § 1) will be given effect under Section 1810. Under Section 1810, a conservator may be nominated in a signed writing whether or not the writing is executed in the same manner as a witnessed will. The second sentence of Section 1488 applies the same standard to a signed writing made under pre-1979 law and purporting to nominate a guardian, even though the writing may not have met the stricter requirement of former Probate Code Section 1463. For background on the provisions of this part, see the Comment to this part under the part heading.

§ 1489. Effect of appointment of guardian by parent or other person for a minor

Comment. Section 1489 continues Section 1489 of the repealed Probate Code without substantive change. This section ensures that appointment of a testamentary guardian made under former Section 1402 or 1403 (provisions repealed by 1979 Cal. Stat. ch. 726, § 1) will be given effect as a nomination of a guardian under Sections 1500 and 1501. See also Section 1514(c)-(d); Civil Code § 4600.

Under Sections 1500 and 1501, a guardian may be nominated in a signed writing whether or not the writing is a will or deed. See Section 1502 and the Comment thereto. The second sentence of Section 1489 applies the same standard to a signed writing made prior to January 1, 1981, and purporting to appoint a guardian, even though the writing may not have met the stricter requirements of former Section 1402 or 1403 (provisions repealed by 1979 Cal. Stat. ch. 726, § 1). As to the application of any amendments made after that date, see Section 3. For background on the provisions of this part, see the Comment to this part under the part heading.

§ 1490. References in statutes

Comment. Section 1490 continues subdivision (a) of Section 1490 of the repealed Probate Code without change. This section recognizes that through inadvertence some conforming changes may not have been made in sections containing references made obsolete by enactment of this division in 1979. Subdivisions (b) and (c) of Section 1490 of the repealed Probate Code are omitted as unnecessary. See Sections 22 (defining "account in an insured credit union"), 23 (defining "account in an insured savings and loan association"), 1403 (defining "absentee"), 1440 (defining "secretary concerned"), 1446 (defining "single-premium deferred annuity"). For background on the provisions of this part, see the Comment to this part under the part heading.

PART 2. GUARDIANSHIP

Comment. This part supersedes Part 2 (commencing with Section 1500) of Division 4 of the repealed Probate Code. The superseded part was enacted upon recommendation of the California Law Revision Commission. See *Recommendation Relating to Guardianship-Conservatorship Law*, 14 Cal. L. Revision Comm'n Reports 501 (1978). For the Guardianship-Conservatorship Law as enacted in 1979 (Chapter 726 of the Statutes of 1979) with the revisions made by Chapters 89 and 246 of the Statutes of 1980, see *Guardianship-Conservatorship Law*, 15 Cal. L. Revision Comm'n Reports 451 (1980).

CHAPTER 1. ESTABLISHMENT OF GUARDIANSHIP

Article 1. Nomination of Guardian

§ 1500. Nomination of guardian of person or estate or both by parent

Comment. Section 1500 continues Section 1500 of the repealed Probate Code without substantive change. As to the effect to be given to a nomination under this section, see Section 1514. See also Civil Code Section 4600 (consideration in proceeding where there is at issue the custody of a minor child of a nomination of a guardian of the person of the child by a parent). As to providing in the nomination for the powers of the guardian, see Section 2108. See also Sections 300-301 (trust company as guardian of estate), 2104 (nonprofit charitable corporation as guardian).

A nomination under Section 1500 is subject to Section 1502, which requires that the nomination be made in the petition for appointment of the guardian or at the hearing on the petition or in a writing signed either before or after the petition is filed. See Section 1502 and the Comment thereto.

An appointment of a guardian for a minor under the law before January 1, 1981, is deemed to be a nomination of a guardian. Section 1489.

For background on the provisions of this part, see the Comment to this part under the part heading.

§ 1501. Nomination of guardian as to particular property

Comment. Section 1501 continues Section 1501 of the repealed Probate Code without change. As to the effect to be given to a nomination under this section, see Section 1514. As to the powers and duties of the guardian, see Section 2109. See also Sections 300-301 (trust company as guardian of estate), 2104 (nonprofit charitable corporation as guardian).

A nomination under Section 1501 is subject to Section 1502, which requires that the nomination be made in the petition for appointment of the guardian or at the hearing on the petition or in a writing signed either before or after the petition is filed. See Section 1502 and the Comment thereto.

Section 1501 covers all property received from or by designation of the person making the nomination, and includes such property as proceeds from an insurance policy. This changes the rule of Estate of Welfer, 110 Cal. App. 2d 262, 242 P.2d 655 (1952). Under Section 1501, a person may nominate a guardian for the proceeds of a life insurance policy owned by the nominator on the life of the nominator or on the life of a person surviving the nominator.

Where a parent attempts to nominate a general guardian of the estate of a child as authorized by Section 1500, but the nomination does not satisfy the requirements of Section 1500 because written consent of the other parent is required but not obtained, the nomination may nevertheless satisfy the requirements of Section 1501 and permit appointment of a guardian with respect to the property of the nominating parent that the child takes from that parent. See Guardianship of Joaquin, 168 Cal. App. 2d 99, 335 P.2d 507 (1959).

For background on the provisions of this part, see the Comment to this part under the part heading.

§ 1502. Manner of making nomination; when effective; effect of subsequent legal incapacity or death of nominator

Comment. Section 1502 continues Section 1502 of the repealed Probate Code without change. Subdivision (b) makes clear that a writing making a nomination under this article may specify one or more conditions the occurrence of which makes the nomination become effective. Absent such specification, the nomination is effective, unless revoked, when made. Subdivision (c) makes clear that death or subsequent lack of legal capacity does not make the nomination ineffective unless the writing making the nomination expressly otherwise provides. For background on the provisions of this part, see the Comment to this part under the part heading.

Article 2. Appointment of Guardian Generally

§ 1510. Petition for appointment

Comment. Section 1510 continues Section 1510 of the repealed Probate Code without change. For general provisions relating to petitions and other papers, see Sections 1020-1023. See also Sections 1021 (petition to be verified), 1041 (clerk to set petition for hearing),

1512 (amendment of petition to disclose newly discovered proceeding affecting custody). For background on the provisions of this part, see the Comment to this part under the part heading. See also *Recommendation Relating to the Uniform Veterans Guardianship Act,* 15 Cal. L. Revision Comm'n Reports 1289, 1299 (1980).

§ 1511. Notice of hearing

Comment. Section 1511 continues Section 1511 of the repealed Probate Code without substantive change. The provision that the court may not shorten the time for giving the notice of hearing has been added to Section 1511, but this provision continues a provision formerly found in the introductory clause of subdivision (a) of Section 1462 of the repealed Probate Code. The phrase "other than the petitioner or persons joining in the petition" has been omitted from two places in the section. This phrase is unnecessary in view of Section 1201.

Subdivision (a) requires that notice be given at least 15 days before the hearing, and this time may not be shortened by the court. If there is urgency, a temporary guardian may be appointed under Section 2250. For general provisions relating to notice of hearing, see Sections 1200-1221, 1460-1469. See also Sections 1260-1265 (proof of giving notice). For general provisions relating to hearings and orders, see Sections 1040-1050. For background on the provisions of this part, see the Comment to this part under the part heading. See also *Recommendation Relating to the Uniform Veterans Guardianship Act,* 15 Cal. L. Revision Comm'n Reports 1289, 1299-300 (1980); *Report of Assembly Committee on Judiciary on Assembly Bills Nos. 261 and 167,* reprinted in 15 Cal. L. Revision Comm'n Reports 1061, 1067 (1980).

§ 1512. Amendment of petition to disclose newly discovered proceeding affecting custody

Comment. Section 1512 continues Section 1512 of the repealed Probate Code without change. The purpose of this section is to alert the court to any other proceeding affecting custody of the proposed ward that was not disclosed in the initial guardianship petition. See also Section 1510(h) (consolidation of guardianship petition with adoption petition). For background on the provisions of this part, see the Comment to this part under the part heading.

§ 1513. Investigation and report by court-designated officer

Comment. Section 1513 continues Section 1513 of the repealed Probate Code without substantive change. See also Section 1454 (court investigator), 1543 (report on suitability on guardian). For background on the provisions of this part, see the Comment to this part under the part heading.

§ 1513.1. Assessment for expense of county investigation and review

Comment. Section 1513.1 continues Section 1513.1 of the repealed Probate Code without substantive change. For background on the provisions of this part, see the Comment to this part under the part heading.

§ 1514. Appointment of guardian

Comment. Section 1514 continues Section 1514 of the repealed Probate Code without change. See also Sections 300-301 (trust company as guardian of estate), 2104 (nonprofit charitable corporation as guardian), 2750 (granting letters, other than temporary letters, an appealable order), 2752 (effect of reversal of order appointing guardian). For general provisions relating to hearings and orders, see Sections 1040-1050.

Subdivision (b) applies only to a guardian of the person of a minor. If a person is to be appointed as guardian of both the person and of the estate, the requirement of subdivision (b) governs the appointment. Subdivision (b) incorporates by reference Section 4600 of the Civil Code, which applies to any proceeding where there is at issue the custody of a minor, including a guardianship proceeding. See, e.g., Guardianship of Marino, 30 Cal. App. 3d 952, 106 Cal. Rptr. 655 (1973).

Subdivision (d) permits appointment of a person nominated as guardian of the person and estate of a minor in the court's discretion if the appointment of such person is permitted under the standard provided in Civil Code Section 4600. But, even though the person nominated as a guardian of the person and estate is not appointed as guardian of the person, the court must nevertheless appoint the nominee as the guardian of the estate unless the court determines that the nominee is unsuitable.

Subdivision (e) provides standards for appointing a guardian of the general estate of a minor. See also Section 2650 (conflict of interest, conviction of felony, or gross immorality as causes for removal of guardian). Insolvency or bankruptcy of guardian of estate also is cause for removal. See Section 2650. A guardian of the general estate may coexist with a guardian as to particular property nominated under Section 1501, with the latter controlling the property received from the person making the nomination. Section 2109. However, no new guardian of the general estate may be appointed when an existing guardian of the general estate is serving unless the existing guardian is removed or the appointment is vacated. See Guardianship of Kimball, 80 Cal. App. 2d 884, 182 P.2d 612 (1947).

When a nominated guardian is granted additional powers in the nomination and is appointed by the court, the order of appointment shall

include a grant of the additional powers to the guardian unless the court for good cause determines otherwise. See Section 2108. As to the powers and duties of a guardian of particular property, see Section 2109.

Section 1510 permits a minor 14 years of age or older to petition as a party in a guardianship proceeding for the appointment of his or her own guardian and requires that the proposed guardian be specified in the petition. Civil Code Section 4600 requires the court to consider and give due weight to the minor's preference concerning the minor's custody. And subdivision (e) of Section 1514 requires the court to consider the minor's preference as to the person to be appointed as guardian of the estate.

If a guardian of the estate is nominated under Section 1500 or 1501, the provisions of subdivision (e) are subject to subdivisions (c) and (d), so that the court must appoint the nominee unless the court determines that the nominee is unsuitable. In such a case, the court is not bound by the requirements of subdivision (e). The court may thus disregard the minor's preference, although nothing precludes the court from taking it into account in determining whether the nominee is unsuitable. See also Civil Code Section 4600 (consideration in proceeding where there is at issue the custody of a minor child of a nomination of a guardian of the person of the child by a parent).

For background on the provisions of this part, see the Comment to this part under the part heading.

§ 1515. No guardian of person for married minor

Comment. Section 1515 continues Section 1515 of the repealed Probate Code without substantive change. A conservator of the person may be appointed where necessary for a minor who is married or whose marriage has been dissolved. See Section 1800.3(b). Nothing in Section 1515 precludes appointment of a guardian of the estate of a married minor. For background on the provisions of this part, see the Comment to this part under the part heading.

§ 1516. Notice to local agency designated to investigate guardianships

Comment. Section 1516 continues Section 1516 of the repealed Probate Code without substantive change. The phrase "having jurisdiction over the case" is omitted as unnecessary in view of the definition of "court" found in Section 1418. For background on the provisions of this part, see the Comment to this part under the part heading.

Article 3. Nonrelative Guardianships

§ 1540. Application of article

Comment. Section 1540 continues Section 1540 of the repealed Probate Code without substantive change. For background on the provisions of this part, see the Comment to this part under the part heading.

§ 1541. Additional contents of petition for guardianship

Comment. Section 1541 continues Section 1541 of the repealed Probate Code without change. For cases in which this article does not apply, see Section 1540. For general provisions relating to petitions and other papers, see Sections 1020-1023. For background on the provisions of this part, see the Comment to this part under the part heading.

§ 1542. Notice to Director of Social Services and to local agency designated to investigate guardianships

Comment. Section 1542 continues Section 1542 of the repealed Probate Code without change. For cases in which this article does not apply, see Section 1540. For general provisions relating to notice of hearing, see Sections 1200-1221, 1460-1469. See also Sections 1260-1265 (proof of giving notice). For background on the provisions of this part, see the Comment to this part under the part heading.

§ 1543. Report on suitability of guardian

Comment. Section 1543 continues Section 1543 of the repealed Probate Code without change. See also Section 1513 (investigation by court investigator, probation officer, or domestic relations investigator). For cases in which this article does not apply, see Section 1540. For background on the provisions of this part, see the Comment to this part under the part heading.

CHAPTER 2. TERMINATION

§ 1600. Majority, death, adoption, or marriage of ward

Comment. Section 1600 continues Section 1600 of the repealed Probate Code without change. The court retains jurisdiction of the guardianship proceeding despite the termination of the guardianship. See Section 2630. If a married minor needs protective supervision of the person, a petition for conservatorship of the person may be filed. See Section 1800.3. See also Section 1820(b) (filing petition for appointment of conservator during proposed conservatee's minority so appointment may be effective immediately upon minor becoming 18) and Section 2467 (powers and duties after death of ward). For background on the provisions of this part, see the Comment to this part under the part heading.

§ 1601. Termination by court order

Comment. Section 1601 continues Section 1601 of the repealed Probate Code without change. The court retains jurisdiction of the guardianship proceeding despite termination of the guardianship. See Section 2630. For general provisions, see Sections 1000-1004 (rules of practice), 1020-1023 (petitions and other papers), 1040-1050 (hearings and orders), 2103 (effect of final order). For general provisions relating to notice of hearing, see Sections 1200-1221, 1460-1469. See also Sections 1260-1265 (proof of giving notice), 2700-2702 (notice to persons who request special notice). For background on the provisions of this part, see the Comment to this part under the part heading. See also *Report of Assembly Committee on Judiciary on Assembly Bills Nos. 261 and 167,* reprinted in 15 Cal. L. Revision Comm'n Reports 1061, 1068 (1980).

PART 3. CONSERVATORSHIP

Comment. This part supersedes Part 3 (commencing with Section 1800) of Division 4 of the repealed Probate Code. The superseded part was enacted upon recommendation of the California Law Revision Commission. See *Recommendation Relating to Guardianship-Conservatorship Law,* 14 Cal. L. Revision Comm'n Reports 501 (1978). For the Guardianship-Conservatorship Law as enacted in 1979 (Chapter 726 of the Statutes of 1979) with the revisions made by Chapters 89 and 246 of the Statutes of 1980, see *Guardianship-Conservatorship Law,* 15 Cal. L. Revision Comm'n Reports 451 (1980).

CHAPTER 1. ESTABLISHMENT OF CONSERVATORSHIP

Article 1. Persons for Whom Conservator May be Appointed

§ 1800. Legislative intent

Comment. Section 1800 continues Section 1800 of the repealed Probate Code without change.

§ 1800.3. Conservatorships for adults or married minors

Comment. Section 1800.3 continues Section 1800.3 of the repealed Probate Code without change. This section makes clear that a conservatorship may be established only for (1) adults and (2) minors who are married or whose marriage has been dissolved. In case of a minor who is married or whose marriage has been dissolved, a conservator of the person may be appointed if the requirements of this chapter are satisfied. A guardian of the estate of the minor may be

appointed where necessary or convenient. See Sections 1514, 1515. In case of a minor whose marriage has been adjudged a nullity, guardianship and not conservatorship is the appropriate protective proceeding of the person. See Section 1515. However, if a conservatorship is established for a married minor and the marriage is later adjudged a nullity, the conservatorship does not terminate. See Section 1860 and the Comment thereto. For background on the provisions of this part, see the Comment to this part under the part heading.

§ 1801. Showing required for appointment generally

Comment. Section 1801 continues Section 1801 of the repealed Probate Code without substantive change. For background on the provisions of this part, see the Comment to this part under the part heading.

§ 1802. Appointment upon request of proposed conservatee

Comment. Section 1802 continues Section 1802 of the repealed Probate Code without substantive change. For background on the provisions of this part, see the Comment to this part under the part heading.

§ 1803. Conservator of estate of "absentee"

Comment. Section 1803 continues Section 1803 of the repealed Probate Code without substantive change. For special provisions applicable where the proposed conservatee is an absentee, see Article 4 (commencing with Section 1840). For background on the provisions of this part, see the Comment to this part under the part heading.

§ 1804. Conservator of estate of missing person

Comment. Section 1804 continues Section 1804 of the repealed Probate Code without substantive change. For special provisions applicable where the proposed conservatee is a missing person, see Article 5 (commencing with Section 1845). See also Section 1461.7 (notice of hearing on petition, report, or account). If a minor is a missing person, a guardianship of the estate may be established for the minor. See Section 1514 (guardian may be appointed if it appears necessary or convenient). For the recommendation of the California Law Revision Commission that resulted in the enactment of this section of the repealed Probate Code, see *Recommendation Relating to Missing Persons,* 16 Cal. L. Revision Comm'n Reports 105 (1982). For background on the provisions of this part, see the Comment to this part under the part heading.

Article 2. Order of Preference for Appointment of Conservator

§ 1810. Nomination by proposed conservatee

Comment. Section 1810 continues Section 1810 of the repealed Probate Code without change. This section does not require that the writing containing the nomination be executed in the same manner as a witnessed will. The only formal requirements for a nomination under this section are that the nomination be in writing and be signed by the proposed conservatee. The nomination may be made in a writing made long before conservatorship proceedings are commenced. But, whenever made, the proposed conservatee must have had at the time the writing was executed sufficient capacity to form an intelligent preference. A nomination of a guardian made by an adult before January 1, 1981, is deemed to be a nomination of a conservator. See Section 1488. The proposed conservatee—whether or not the petitioner—may waive bond and, in such a case, the court may in its discretion dispense with bond or reduce its amount. See Section 2321. See also Sections 300-301 (trust company as guardian of estate), 2104 (nonprofit charitable corporation as guardian). For background on the provisions of this part, see the Comment to this part under the part heading. See also *Report of Assembly Committee on Judiciary on Assembly Bills Nos. 261 and 167,* reprinted in 15 Cal. L. Revision Comm'n Reports 1061, 1068 (1980).

§ 1811. Nomination by spouse or relative of proposed conservatee

Comment. Section 1811 continues Section 1811 of the repealed Probate Code without change. Unlike a nominated guardian of the estate which the court must appoint unless the nominee is "unsuitable" (Section 1514), or the nominee of the proposed conservatee which the court must appoint unless it is not in the best interests of the proposed conservatee (Section 1810), a nomination made under Section 1811 merely entitles the nominee to some preference for appointment. See Section 1812. See also Sections 300-301 (trust company as guardian of estate), 2104 (nonprofit charitable corporation as guardian). For background on the provisions of this part, see the Comment to this part under the part heading.

§ 1812. Order of preference for appointment as conservator

Comment. Section 1812 continues Section 1812 of the repealed Probate Code without change. For background on the provisions of this part, see the Comment to this part under the part heading.

§ 1813. Condition for appointment of absentee's spouse

Comment. Section 1813 continues Section 1813 of the repealed Probate Code without substantive change. The reference to "divorce" is omitted as unnecessary in view of Section 36 ("dissolution of marriage" includes divorce). For background on the provisions of this part, see the Comment to this part under the part heading.

Article 3. Establishment of Conservatorship

§ 1820. Filing of petition

Comment. Section 1820 continues Section 1820 of the repealed Probate Code without change. Subdivision (b) permits uninterrupted continuation of protective proceedings for a minor under guardianship who is approaching majority and will need a conservator. For general provisions relating to petitions and other papers, see Sections 1020-1023. For background on the provisions of this part, see the Comment to this part under the part heading. See also *Report of Assembly Committee on Judiciary on Assembly Bills Nos. 261 and 167,* reprinted in 15 Cal. L. Revision Comm'n Reports 1061, 1069 (1980).

§ 1821. Contents of petition

Comment. Section 1821 continues Section 1821 of the repealed Probate Code without substantive change. An application under subdivision (f) may include a request for an order authorizing independent exercise of powers (Section 2592) or an order relating to the legal capacity of the proposed conservatee (Sections 1870-1901). If the allegation provided for in subdivision (g) is made, it triggers an investigation and report by the court investigator (Section 1826) which may result in a determination by the court that the proposed conservatee need not attend the hearing (Section 1825). For general provisions relating to petitions and other papers, see Sections 1020-1023. For background on the provisions of this part, see the Comment to this part under the part heading. See also *Report of Assembly Committee on Judiciary on Assembly Bills Nos. 261 and 167,* reprinted in 15 Cal. L. Revision Comm'n Reports 1061, 1069 (1980); *Recommendation Relating to the Uniform Veterans Guardianship Act,* 15 Cal. L. Revision Comm'n Reports 1289, 1301 (1980).

§ 1822. Notice of hearing

Comment. Section 1822 restates Section 1822 of the repealed Probate Code without substantive change. The provision that the court may not shorten the time for giving the notice of hearing has been added to subdivision (a) of Section 1822, but this provision continues a provision formerly found in the introductory clause of subdivision (a) of Section

1462 of the repealed Probate Code. The phrase "other than the petitioner or persons joining in the petition" has been omitted from two places in the section, this phrase being unnecessary in view of Section 1201. The requirement of subdivision (f) that the notice be accompanied by a copy of the petition has been omitted as unnecessary since subdivision (a) already imposes this requirement in all cases where notice of hearing is given as provided in the section. Subdivision (f) has been revised to require that the notice of hearing be mailed at least 30 days before the day of the hearing on the petition. This conforms subdivision (f) to Section 1461.4. For general provisions relating to notice of hearing, see Sections 1200-1221, 1460-1469. See also Sections 1260-1265 (proof of giving notice), 2700-2702 (notice to persons who request special notice). For background on the provisions of this part, see the Comment to this part under the part heading. See also *Recommendation Relating to the Uniform Veterans Guardianship Act,* 15 Cal. L. Revision Comm'n Reports 1289, 1302 (1980).

§ 1823. Citation to proposed conservatee

Comment. Section 1823 continues Section 1823 of the repealed Probate Code without change. A citation is not required if the proposed conservatee is an "absentee." Section 1843. For a general provision relating to citations, see Sections 1240-1241. For background on the provisions of this part, see the Comment to this part under the part heading.

§ 1824. Service on proposed conservatee of citation and petition

Comment. Section 1824 continues Section 1824 of the repealed Probate Code without change. No citation is required if the proposed conservatee is the petitioner. See Section 1823(a). If the proposed conservatee is an "absentee," no citation is required. Section 1843. For background on the provisions of this part, see the Comment to this part under the part heading.

§ 1825. Attendance of proposed conservatee at hearing

Comment. Section 1825 continues Section 1825 of the repealed Probate Code without change. An "absentee," as defined in Section 1403, need not attend the hearing. See Section 1844. For general provisions relating to hearings and orders, see Sections 1040-1050. For background on the provisions of this part, see the Comment to this part under the part heading.

§ 1826. Investigation and report by court investigator if proposed conservatee will not attend hearing

Comment. Section 1826 continues Section 1826 of the repealed Probate Code without change. The determinations referred to in subdivisions (c), (e), and (f) are relevant to whether the proposed conservatee must attend the hearing. See Section 1825(a)(2)-(3). See also Section 1851.5 (assessment of estate for investigation expense). For background on the provisions of this part, see the Comment to this part under the part heading. See also *Report of Assembly Committee on Judiciary on Assembly Bills Nos. 261 and 167,* reprinted in 15 Cal. L. Revision Comm'n Reports 1061, 1070-71 (1980); *Report of Senate Committee on Judiciary on Assembly Bill No. 261,* reprinted in 15 Cal. L. Revision Comm'n Reports 1097, 1099 (1980).

§ 1827. Law and procedure applicable to hearing

Comment. Section 1827 continues Section 1827 of the repealed Probate Code without change. Under Section 1827, the proposed conservatee is entitled to a jury trial on the question of the establishment of the conservatorship. However, the question of who is to be appointed as conservator is a matter to be determined by the court. See Sections 1452, 1810-1813. Likewise, there is no right to a jury trial in connection with an order relating to the legal capacity of the conservatee. See Sections 1452, 1873, 1890, 1901, 1910. For general provisions relating to hearings and orders, see Sections 1040-1050. See also Section 2103 (effect of final order). For background on the provisions of this part, see the Comment to this part under the part heading.

§ 1827.5. Assessment of proposed limited conservatee at regional center

Comment. Section 1827.5 continues Section 1827.5 of the repealed Probate Code without substantive change. For the recommendation of the California Law Revision Commission that resulted in the amendment of this section of the repealed Probate Code, see *Recommendation Relating to Notice in Limited Conservatorship Proceedings,* 16 Cal. L. Revision Comm'n Reports 199 (1982). For background on the provisions of this part, see the Comment to this part under the part heading.

§ 1828. Information to proposed conservatee by court

Comment. Section 1828 continues Section 1828 of the repealed Probate Code without change. For background on the provisions of this part, see the Comment to this part under the part heading.

§ 1828.5. Inquiry and information by court in limited conservatorship proceeding

Comment. Section 1828.5 continues Section 1828.5 of the repealed Probate Code without change. For background on the provisions of this part, see the Comment to this part under the part heading.

§ 1829. Persons who may support or oppose petition

Comment. Section 1829 restates Section 1829 of the repealed Probate Code without substantive change. The reference to "any officer or agency of this state, or of the United States, or any authorized representative thereof" has been omitted as unnecessary in view of Section 1424 (defining "interested person"). See also Section 1043 (response or objection by interested person). For background on the provisions of this part, see the Comment to this part under the part heading.

§ 1830. Contents of order appointing conservator

Comment. Section 1830 continues Section 1830 of the repealed Probate Code without substantive change. For general provisions relating to hearings and orders, see Sections 1040-1050. See also Sections 300-301 (trust company as guardian of estate), 2104 (nonprofit charitable corporation as guardian). As to the effect of final order, see Section 2103. See also Section 2650 (grounds of removal of conservator include incapacity to perform duties suitably, conviction of felony, gross immorality, and conflict of interest). Insolvency or bankruptcy of conservator also is a cause for removal. See Section 2650. See also Section 2750 (granting letters, other than temporary letters, an appealable order). As to the effect of reversal on appeal of order appointing conservator, see Section 2752. For background on the provisions of this part, see the Comment to this part under the part heading.

§ 1835. Informational package for private conservator

Comment. Section 1835 continues Section 1835 of the repealed Probate Code but substitutes "under this division" for "under this part" to recognize that the conservator's rights, duties, limitations, and responsibilities are stated in this division, not just in this part. The section also is revised to make other conforming and nonsubstantive revisions.

Article 4. Special Provisions Applicable Where Proposed Conservatee is an Absentee

§ 1840. Procedure for appointment of conservator for absentee

Comment. Section 1840 continues Section 1840 of the repealed Probate Code without change. For background on the provisions of this part, see the Comment to this part under the part heading.

§ 1841. Additional contents of petition

Comment. Section 1841 continues Section 1841 of the repealed Probate Code without substantive change. The reference to "divorce" is omitted as unnecessary in view of the definition provided by Section 36 ("dissolution of marriage" includes divorce). For general provisions relating to petitions and other papers, see Sections 1020-1023. "Absentee" is defined in Section 1403. For background on the provisions of this part, see the Comment to this part under the part heading.

§ 1842. Notice of hearing

Comment. Section 1842 continues Section 1842 of the repealed Probate Code without change. See also Section 1440 ("secretary concerned" defined). For general provisions relating to notice of hearing, see Sections 1200-1221, 1460-1469. See also Sections 1260-1265 (proof of giving notice), 2700-2702 (notice to persons who request special notice). For background on the provisions of this part, see the Comment to this part under the part heading.

§ 1843. Citation to proposed conservatee not required

Comment. Section 1843 continues Section 1843 of the repealed Probate Code without change. For background on the provisions of this part, see the Comment to this part under the part heading.

§ 1844. Proof of status of proposed conservatee; attendance at hearing not required

Comment. Section 1844 continues Section 1844 of the repealed Probate Code without change. For background on the provisions of this part, see the Comment to this part under the part heading.

Article 5. Special Provisions Applicable Where Proposed Conservatee Is a Missing Person

Comment. For the recommendation of the California Law Revision Commission that resulted in the enactment of this article of the repealed Probate Code, see *Recommendation Relating to Missing Persons,* 16 Cal. L. Revision Comm'n Reports 105 (1982).

§ 1845. Appointment of conservator of estate of missing person whose whereabouts are unknown

Comment. Section 1845 continues Section 1845 of the repealed Probate Code without change. Subdivision (a) is comparable to Section 1840 (conservatee who is an "absentee"). The appointment of a conservator is governed by other provisions where the proposed conservatee is an absentee as defined in Section 1403. See Article 4 (commencing with Section 1840). For background on the provisions of this article, see the Comment to this article under the article heading.

§ 1846. Additional contents of petition

Comment. Section 1846 continues Section 1846 of the repealed Probate Code without substantive change. Under some circumstances, the court may decline to appoint a permanent conservator pending further developments, but may appoint a temporary conservator. See Section 2250 (petition for appointment of temporary conservator pending court's final determination of petition for appointment of conservator). See also Section 2252 (powers and duties of temporary conservator). In other circumstances, the court may determine that a permanent conservator should be appointed without delay. For general provisions relating to petitions and other papers, see Sections 1020-1023. For background on the provisions of this article, see the Comment to this article under the article heading.

§ 1847. Notice of hearing

Comment. Section 1847 continues Section 1847 of the repealed Probate Code without substantive change. A reference to Section 1202 has been substituted for a reference to Section 1462, Section 1202 having superseded Section 1462.

Unlike Section 1842, which requires notice to be published in the county where the hearing will be held, Section 1847 requires notice to be published in the county where the proposed conservatee was last known to reside if his or her last known address is in this state. Publishing notice in this county is more likely to give actual notice to the proposed conservatee. If the last known address is not in this state, Section 1847 does not require publication of notice, but, in such a case, the court may require publication within or without this state pursuant to subdivision (c). For general provisions relating to notice of hearing, see Sections 1200-1221, 1460-1469. See also Sections 1260-1265 (proof of giving notice), 2700-2702 (notice to persons who request special notice).

Nothing in this section limits the authority of the court in determining the need for conservatorship to require that a search be made for the missing person before a conservator is appointed. Whether to require

such a search and the type of search to be required is left to the court's discretion. In exercising this discretion, the court may consider all the circumstances, including the nature of the disappearance, the character and amount of the estate, and the circumstances of persons who have an interest in the proceeding. For example, the court may dispense with a search if the missing person's estate is nominal, there are dependents entitled to support, and the funds necessary for support would be significantly reduced by the cost of the search. In other cases, no purpose would be served by a court-ordered search, such as where the proposed conservatee is lost at sea.

For background on the provisions of this article, see the Comment to this article under the article heading.

§ 1848. Acts not required in proceeding

Comment. Section 1848 continues Section 1848 of the repealed Probate Code without change. This section excuses performance of any duty under the general provisions that depends upon knowledge of the whereabouts of the missing person. The section does not limit the authority of the court to require that an attempt be made to locate the missing person. See the Comment to Section 1847. For background on the provisions of this article, see the Comment to this article under the article heading.

§ 1849. Findings prerequisite to appointment of conservator

Comment. Section 1849 continues Section 1849 of the repealed Probate Code without substantive change. For a special provision relating to notice of hearing on a petition, report, or account, see Section 1461.7. For general provisions, see Sections 1000-1004 (rules of practice), 1020-1023 (petitions and other papers), 1040-1050 (hearings and orders). As to the effect of final order, see Section 2103. For background on the provisions of this article, see the Comment to this article under the article heading.

§ 1849.5. Application of article

Comment. Section 1849.5 continues Section 1849.5 of the repealed Probate Code without substantive change. Subdivision (a) permits a petition to be filed under this article, without regard to when the missing person disappeared. Subdivision (b) makes clear that a trusteeship created under former law continues under that law, but may be changed to a conservatorship under this article on petition. For background on the provisions of this article, see the Comment to this article under the article heading.

CHAPTER 2. PERIODIC REVIEW OF CONSERVATORSHIP

§ 1850. Court review of conservatorship

Comment. Section 1850 continues Section 1850 of the repealed Probate Code without change. Subdivision (b) provides two exceptions to application of the chapter. The first exception recognizes that the chapter as a practical matter cannot apply where the conservatee is an absentee. The second exception is consistent with Section 1825(a)(1). See also Section 1851.5 (assessment of estate for investigation expense). For background on the provisions of this part, see the Comment to this part under the part heading.

§ 1851. Visitation and findings by court investigator

Comment. Section 1851 continues Section 1851 of the repealed Probate Code without change. See also Section 1851.5 (assessment of estate for investigation expense). For background on the provisions of this part, see the Comment to this part under the part heading.

§ 1851.5. Assessment of estate for investigation expense

Comment. Section 1851.5 restates Section 1851.5 of the repealed Probate Code without substantive change, except that subdivision (b) is revised to give the court discretion to order reimbursement from the estate and subdivision (c) is revised to substite a reference to Government Code Sections 17561 and 17565 in place of the reference to Revenue and Taxation Code Sections 2231 and 2234. The Revenue and Taxation Code sections were repealed (1986 Cal. Stat. ch. 879) and were superseded by the Government Code sections. For background on the provisions of this part, see the Comment to this part under the part heading.

§ 1852. Notification of counsel; representation of conservatee at hearing

Comment. Section 1852 continues Section 1852 of the repealed Probate Code without change. This section supplements subdivisions (a) and (b) of Section 1471. For general provisions, see Sections 1000-1004 (rules of practice), 1020-1023 (petitions and other papers), 1040-1050 (hearings and orders). As to the effect of final order, see Section 2103. For background on the provisions of this part, see the Comment to this part under the part heading.

§ 1853. Failure to locate conservatee; removal of conservator on failure to produce conservatee; petition to appoint new conservator

Comment. Section 1853 continues Section 1853 of the repealed Probate Code without substantive change. The conservatorship is to be

terminated only if the conservator fails to show good cause for not making the conservatee available. What constitutes good cause depends on the circumstances. For example, good cause is shown (1) where it is established that the conservatee disappeared from his or her place of residence and a diligent search was made to find the conservatee or (2) where the conservatee is out of state to receive necessary medical treatment. Section 1853 provides for the manner of service and provides that the conservatee is to be made available to the court investigator for the purposes of Section 1851. Under Section 1853, the conservator of the person, if there is one, has the duty to make the conservatee available. If there is no conservator of the person, the duty falls on the conservator of the estate. For general provisions, see Sections 1000-1004 (rules of practice), 1020-1023 (petitions and other papers), 1040-1050 (hearings and orders). See also Section 2750 (order removing conservator an appealable order). As to the effect of final order, see Section 2103. For background on the provisions of this part, see the Comment to this part under the part heading. See also *Report of Assembly Committee on Judiciary on Assembly Bills Nos. 261 and 167,* reprinted in 15 Cal. L. Revision Comm'n Reports 1061, 1071 (1980).

CHAPTER 3. TERMINATION

§ 1860. When conservatorship terminates

Comment. Section 1860 continues Section 1860 of the repealed Probate Code without substantive change. As to limited conservatorships, see Section 1860.5.

Subdivision (b) provides that a conservatorship of the person does not terminate if the marriage of a minor is dissolved or adjudged a nullity. Although a conservatorship cannot be established under Section 1800.3 for a minor whose marriage has been adjudged a nullity (Section 1515 permits creation of a guardianship in such a case), subdivision (b) of Section 1860 permits a conservatorship of the person to continue if the minor's marriage is adjudged a nullity after the conservatorship is established. Subdivision (b) avoids the need to establish a guardianship for the person of a married minor whose marriage is adjudged a nullity and then to reestablish a conservatorship of the person when the minor reaches majority. Subdivision (b) makes no reference to a conservatorship of the estate, since guardianship is the appropriate protective proceeding for the estate of a minor, whether married or unmarried. See the Comment to Section 1515.

Death of the conservator merely terminates the relationship of conservator and conservatee, but does not terminate the conservatorship proceeding. The court retains jurisdiction of the conservatorship

proceeding despite termination of the relationship of conservator and conservatee. See Section 2630. Cf. Estate of Mims, 202 Cal. App. 2d 332, 20 Cal. Rptr. 667 (1962) (guardianship). See also Section 2467 (powers and duties after death of conservatee).

For background on the provisions of this part, see the Comment to this part under the part heading.

§ 1860.5. When limited conservatorship terminates

Comment. Section 1860.5 continues Section 1860.5 of the repealed Probate Code with the omission of some unnecessary provisions. The reference to the duty of the limited conservator to see to the custody and conservation of the estate pending delivery to person or representative of the limited conservatee's estate has been omitted as unnecessary in view of Section 2467 (care of estate pending delivery to personal representative). See also Sections 2630-2631 (accounts on termination of relationship). The requirement that the petition be verified has been omitted as unnecessary in view of Section 1021. The portion of the section relating to the revoking of specific powers and duties of the limited conservatorship has been omitted because the procedure provided in this chapter deals with termination of the conservatorship and the omitted portion is unnecessary in view of subdivisions (c) and (d) of Section 2351.5. As to the effect of final order, see Section 2103. For background on the provisions of this part, see the Comment to this part under the part heading.

§ 1861. Petition for termination of conservatorship

Comment. Section 1861 continues Section 1861 of the repealed Probate Code without change. For general provisions relating to petitions and other papers, see Sections 1020-1023. For background on the provisions of this part, see the Comment to this part under the part heading.

§ 1862. Notice of hearing

Comment. Section 1862 continues Section 1862 of the repealed Probate Code without change. For general provisions relating to notice of hearing, see Sections 1200-1221, 1460-1469. See also Sections 1260-1265 (proof of giving notice), 2700-2702 (notice to persons who request special notice). For background on the provisions of this part, see the Comment to this part under the part heading.

§ 1863. Hearing and judgment

Comment. Section 1863 continues Section 1863 of the repealed Probate Code without substantive change. For general provisions, see Sections 1000-1004 (rules of practice), 1020-1023 (petitions and other papers), 1040-1050 (hearings and orders). As to the effect of final order,

see Section 2103. For background on the provisions of this part, see the Comment to this part under the part heading.

§ 1864. Termination of conservatorship of absentee

Comment. Section 1864 continues Section 1864 of the repealed Probate Code without change. For general provisions, see Sections 1000-1004 (rules of practice), 1020-1023 (petitions and other papers), 1040-1050 (hearings and orders). As to the effect of final order, see Section 2103. For background on the provisions of this part, see the Comment to this part under the part heading.

§ 1865. Restoring right to vote

Comment. Section 1865 continues Section 1865 of the repealed Probate Code without substantive change. For background on the provisions of this part, see the Comment to this part under the part heading.

CHAPTER 4. LEGAL CAPACITY OF CONSERVATEE

Article 1. Capacity to Bind or Obligate Conservatorship Estate

§ 1870. "Transaction" defined

Comment. Section 1870 continues Section 1870 of the repealed Probate Code without change. The right to make a will may not be limited under this article. Section 1871(c). As to other rights not denied to the conservatee, see Section 1871. For background on the provisions of this part, see the Comment to this part under the part heading.

§ 1871. Rights not affected by conservatorship

Comment. Section 1871 continues Section 1871 of the repealed Probate Code without change. This section lists certain rights of the conservatee that are not affected by Section 1872.

Subdivision (a) recognizes that the conservatee has sole control of an allowance provided under Section 2421. Section 2421(c).

Subdivision (b) recognizes that wages or salary of the conservatee are subject to the conservatee's control unless the court otherwise orders. Section 2601.

Subdivision (c) codifies Estate of Powers, 81 Cal. App. 2d 480, 184 P.2d 319 (1947). Appointment of a conservator is not a determination that the conservatee lacks testamentary capacity. Testamentary capacity is determined by a different standard, which depends on soundness of mind. Section 6100.

Subdivision (d) makes clear that this article does not limit the right of the conservatee to obtain (for reasonable value) necessaries of life for the conservatee and the conservatee's spouse and minor children. The

subdivision is consistent with the requirement that the conservator must pay debts incurred by the conservatee during the conservatorship for necessaries of life for the conservatee and the conservatee's spouse and minor children, to the extent the debt is reasonable. Section 2430(a)(2). See also Civil Code § 38 ("person entirely without understanding" is liable for "the reasonable value of things furnished to him necessary for his support or the support of his family").

For background on the provisions of this part, see the Comment to this part under the part heading. See also *Report of Assembly Committee on Judiciary on Assembly Bills Nos. 261 and 167,* reprinted in 15 Cal. L. Revision Comm'n Reports 1061, 1071-72 (1980); *Tentative Recommendation Relating to Wills and Intestate Succession,* 16 Cal. L. Revision Comm'n Reports 2301, 2496-97 (1982).

§ 1872. Effect of conservatorship on legal capacity of conservatee

Comment. Section 1872 continues Section 1872 of the repealed Probate Code with the omission of subdivision (b) which was inconsistent with and unnecessary in view of subdivision (c), now subdivision (b). See also Civil Code § 40. Section 1872 governs any type of transaction including, but not limited to, debts, gifts, sales, encumbrances, conveyances, delegations of powers, and waivers of rights. See Section 1870 (defining "transaction"). Making a will is not covered by Section 1872. See Section 1871(c). As to contracts and debts incurred for necessaries, see Section 1871(d). As to capacity of a conservatee concerning community property, see Section 3012. As to the effect of final order, see Section 2103. For background on the provisions of this part, see the Comment to this part under the part heading.

Other consequences of appointing a conservator are that (1) court proceedings must be conducted through the conservator or a guardian ad litem (Code Civ. Proc. §§ 372, 416.70; see also Prob. Code § 1003), (2) the office of trustee held by a conservatee is vacated (Prob. Code § 15643(e)), and (3) many rights may be exercised by the conservator rather than by the conservatee, such as (i) the right to vote shares of stock (Corp. Code § 702), and (ii) the right to disclaim testamentary and other interests (Prob. Code § 276). This listing is illustrative and not exclusive.

The limitation of Section 1872 does not apply to the extent that the court has so ordered under Section 1873. Section 1873 gives the court flexibility to make an order authorizing the conservatee to enter into such transactions as may be appropriate for the particular conservatee and conservatorship estate.

For background on the provisions of this part, see the Comment to this part under the part heading. See also *Report of Assembly Committee on Judiciary on Assembly Bills Nos. 261 and 167,* reprinted in 15 Cal. L. Revision Comm'n Reports 1061, 1072-73 (1980).

§ 1873. Court order affecting legal capacity of conservatee

Comment. Section 1873 continues Section 1873 of the repealed Probate Code without change. This section permits the court to give the conservatee the right to enter into transactions affecting the conservatorship estate which, but for the order, the conservatee would not have under Section 1872. The court might, for example, permit the conservatee to enter into specified types of transactions or transactions not exceeding specified amounts (such as contracts not in excess of $500). Compare Welf. & Inst. Code § 5357 (similar court authority in Lanterman-Petris-Short Act conservatorships). See also Section 1876 (conservatee's transactions subject to general principles of law).

Any rights given to the conservatee under Section 1873 do not affect powers and duties of the conservator, other than the duty to carry out a transaction validly executed by the conservatee. See, e.g., Section 2430. See also Section 2404 (court order for payment of debt, expense, or charge lawfully due and payable). The conservator has the management and control of the conservatorship estate, including the duty to marshal, take possession of, and inventory the conservatee's assets. See Section 2401 and the Comment thereto. A person seeking to enforce a transaction under Section 1873 will ordinarily seek compliance by the conservator, who decides in the first instance whether the transaction satisfies the requirements of this section. The conservator, conservatee, or third person may obtain a court determination and instructions to the conservator if necessary. Section 2403.

In determining whether a transaction is one "into which a reasonably prudent person might enter" under paragraph (2) of subdivision (b), the conservator and the court should consider all the circumstances of the conservatee and conservatorship estate. One important circumstance to be considered is whether the transaction might impair the ability to provide for support, maintenance, and education of the conservatee and of persons the conservatee is legally obligated to support, maintain, or educate. See Section 2430(b) (payment of debts).

For general provisions, see Sections 1000-1004 (rules of practice), 1020-1023 (petitions and other papers), 1040-1050 (hearings and orders). For general provisions relating to notice of hearing, see Sections 1200-1221, 1460-1469. See also Sections 1260-1265 (proof of giving notice), 2700-2702 (notice to persons who request special notice). See also

Section 2750 (order affecting legal capacity of conservatee pursuant to this chapter an appealable order). As to the effect of final order, see Section 2103. For background on the provisions of this part, see the Comment to this part under the part heading. See also *Report of Assembly Committee on Judiciary on Assembly Bills Nos. 261 and 167,* reprinted in 15 Cal. L. Revision Comm'n Reports 1061, 1073-74 (1980).

§ 1874. Petition for order affecting legal capacity of conservatee

Comment. Section 1874 continues Section 1874 of the repealed Probate Code without change. For general provisions relating to petitions and other papers, see Sections 1020-1023. For general provisions relating to notice of hearing, see Sections 1200-1221, 1460-1469. See also Sections 1260-1265 (proof of giving notice), 2700-2702 (notice to persons who request special notice). For background on the provisions of this part, see the Comment to this part under the part heading. See also *Report of Assembly Committee on Judiciary on Assembly Bills Nos. 261 and 167,* reprinted in 15 Cal. L. Revision Comm'n Reports 1061, 1074 (1980).

§ 1875. Good faith purchaser or encumbrancer of real property

Comment. Section 1875 revises Section 1875 of the repealed Probate Code to extend to any person who enters into a transaction in good faith and for a valuable consideration, not only purchasers and encumbrancers. The purpose of this section is to protect innocent third parties who do not have notice of the conservatorship and the resulting incapacity of the conservatee. Nothing in Section 1875 validates a transaction that is invalid under Section 38 of the Civil Code, or prevents rescission of a transaction under Section 39 of the Civil Code, if the conservatee would lack legal capacity for the transaction absent the establishment of the conservatorship. See Section 1876 and the Comment thereto. The sole effect of Section 1875 is to make the limitations on the conservatee's capacity under Section 1872 or under an order made under Section 1873 inapplicable to the transaction if notice of establishment of the conservatorship has not been recorded. For a comparable provision applicable to community property, see Section 3074. For general provisions relating to hearings and orders, see Sections 1040-1050. For background on the provisions of this part, see the Comment to this part under the part heading. See also *Report of Assembly Committee on Judiciary on Assembly Bills Nos. 261 and 167,* reprinted in 15 Cal. L. Revision Comm'n Reports 1061, 1074 (1980).

§ 1876. Applicability of other governing law

Comment. Section 1876 continues Section 1876 of the repealed Probate Code without change. The purpose of this section is to ensure

that the provisions of this article relating to the power of the conservatee to affect the conservatorship estate are not construed as the exclusive rules by which the validity of any transaction entered into by the conservatee is measured. For a comparable provision, see Com. Code § 1103 (supplementary general principles of law applicable). For example, the power of the conservatee to bind the estate by a transaction authorized by the court under Section 1873 is subject to the limitation that the transaction may still be void or voidable because the conservatee lacks contractual capacity under Civil Code Section 38 or 39. For background on the provisions of this part, see the Comment to this part under the part heading. See also *Report of Assembly Committee on Judiciary on Assembly Bills Nos. 261 and 167,* reprinted in 15 Cal. L. Revision Comm'n Reports 1061, 1074 (1980).

Article 2. Capacity to Give Informed Consent for Medical Treatment

§ 1880. Order granting conservator exclusive authority to give consent for medical treatment

Comment. Section 1880 continues Section 1880 of the repealed Probate Code without substantive change. The word "letters" has been substituted for the phrase "letters of conservatorship." See Section 52(b) (defining "letters").

Section 1880 applies only where the court determines that the conservatee lacks capacity to give informed consent to any form of medical treatment. See also Section 2355 and the Comment thereto. If the conservatee has capacity to give informed consent to some forms of medical treatment but lacks capacity to give informed consent to other forms of medical treatment, an order under Section 1880 is not appropriate. In such a case, if medical treatment is required and the conservatee lacks capacity to give informed consent to that treatment, a court order authorizing the treatment must be obtained under Section 2357. For general provisions, see Sections 1000-1004 (rules of practice), 1020-1023 (petitions and other papers), 1040-1050 (hearings and orders). See also Section 2750 (order affecting the legal capacity of conservatee pursuant to this chapter an appealable order). As to the effect of final order, see Section 2103. For background on the provisions of this part, see the Comment to this part under the part heading.

§ 1890. Time for making order; procedure

Comment. Section 1890 continues Section 1890 of the repealed Probate Code without change.

Section 1890 permits an order under Section 1880 to be made when the conservatorship is established or later. There is no right to jury trial in a proceeding under this article. See Section 1452. For general provisions, see Sections 1000-1004 (rules of practice), 1020-1023 (petitions and other papers), 1040-1050 (hearings and orders). For general provisions relating to notice of hearing, see Sections 1200-1221, 1460-1469. See also Sections 1260-1265 (proof of giving notice), 2700-2702 (notice to persons who request special notice). As to the effect of final order, see Section 2103. For background on the provisions of this part, see the Comment to this part under the part heading. See also *Report of Assembly Committee on Judiciary on Assembly Bills Nos. 261 and 167,* reprinted in 15 Cal. L. Revision Comm'n Reports 1061, 1075 (1980).

§ 1891. Petition

Comment. Section 1891 continues Section 1891 of the repealed Probate Code without change. Sections 1891 to 1896 adapt the procedure for appointment of a conservator to the situation where an order affecting the capacity of the conservatee to give informed consent to medical treatment is sought apart from appointment of a conservator. Sections 1891-1896 do not, however, grant the right to a jury trial on the issue. See Section 1452. For general provisions relating to petitions and other papers, see Sections 1020-1023. For background on the provisions of this part, see the Comment to this part under the part heading. See also *Report of Assembly Committee on Judiciary on Assembly Bills Nos. 261 and 167,* reprinted in 15 Cal. L. Revision Comm'n Reports 1061, 1075 (1980).

§ 1892. Notice of hearing

Comment. Section 1892 continues Section 1892 of the repealed Probate Code without change. For general provisions relating to notice of hearing, see Sections 1200-1221, 1460-1469. See also Sections 1260-1265 (proof of giving notice), 2700-2702 (notice to persons who request special notice). For background on the provisions of this part, see the Comment to this part under the part heading. See also *Recommendation Relating to Notice in Guardianship and Conservatorship Proceedings,* 18 Cal. L. Revision Comm'n Reports 1793, 1802-03 (1985).

§ 1893. Attendance of conservatee at hearing

Comment. Section 1893 continues Section 1893 of the repealed Probate Code without change. For background on the provisions of this part, see the Comment to this part under the part heading.

§ 1894. Investigation by court investigator if conservatee will not attend hearing

Comment. Section 1894 continues Section 1894 of the repealed Probate Code without change. For background on the provisions of this part, see the Comment to this part under the part heading.

§ 1895. Hearing

Comment. Section 1895 continues Section 1895 of the repealed Probate Code without change. For general provisions relating to hearings and orders, see Sections 1040-1050. For background on the provisions of this part, see the Comment to this part under the part heading.

§ 1896. Order

Comment. Section 1896 continues Section 1896 of the repealed Probate Code without change. For general provisions relating to hearings and orders, see Sections 1040-1050. See also Section 2750 (order affecting legal capacity of conservatee pursuant to this chapter an appealable order). As to the effect of final order, see Section 2103. For background on the provisions of this part, see the Comment to this part under the part heading.

§ 1897. Duration of order

Comment. Section 1897 continues Section 1897 of the repealed Probate Code without change. For authority to make an order limited in duration, see Section 1896. For modification or revocation of the order, see Section 1898. As to the effect of final order, see Section 2103. For termination of conservatorship, see Chapter 3 (commencing with Section 1860). For background on the provisions of this part, see the Comment to this part under the part heading. See also *Report of Assembly Committee on Judiciary on Assembly Bills Nos. 261 and 167,* reprinted in 15 Cal. L. Revision Comm'n Reports 1061, 1075 (1980).

§ 1898. Modification or revocation of order

Comment. Section 1898 continues Section 1898 of the repealed Probate Code without change. This section makes clear that the court may modify or revoke an order relating to capacity of the conservatee to give informed consent to medical treatment. For general provisions, see Sections 1000-1004 (rules of practice), 1020-1023 (petitions and other papers), 1040-1050 (hearings and orders). For general provisions relating to notice of hearing, see Sections 1200-1221, 1460-1469. See also Sections 1260-1265 (proof of giving notice), 2700-2702 (notice to persons who request special notice). See also Section 2750 (order pursuant to this chapter affecting legal capacity of conservatee an appealable order). As to the effect of final order, see Section 2103. For background on the provisions of this part, see the Comment to this part

under the part heading. See also *Report of Assembly Committee on Judiciary on Assembly Bills Nos. 261 and 167,* reprinted in 15 Cal. L. Revision Comm'n Reports 1061, 1075 (1980).

Article 3. Capacity of Conservatee to Marry

§ 1900. Capacity to marry

Comment. Section 1900 continues Section 1900 of the repealed Probate Code without change. This section makes clear that appointment of a conservator under the Probate Code does not deprive the conservatee of capacity to marry. Cf. Conservatorship of Roulet, 23 Cal. 3d 219, 228, 590 P.2d 1, 152 Cal. Rptr. 425 (1979) (one found to be gravely disabled under Lanterman-Petris-Short Act faces "possible loss" of right to marry). Whether the conservatee has capacity to marry is determined by the law that would be applicable had no conservatorship been established. See also Section 1901 (court determination of conservatee's capacity to marry). For background on the provisions of this part, see the Comment to this part under the part heading. See also *Report of Assembly Committee on Judiciary on Assembly Bills Nos. 261 and 167,* reprinted in 15 Cal. L. Revision Comm'n Reports 1061, 1075-76 (1980).

§ 1901. Order respecting capacity

Comment. Section 1901 continues Section 1901 of the repealed Probate Code without change. As to procedures available after the conservatee marries, see Civil Code §§ 4212 (action to test validity of marriage), 4400-4458 (proceeding to have marriage adjudged a nullity). Under Civil Code Section 4426, a conservator may bring an annulment proceeding. For general provisions, see Sections 1000-1004 (rules of practice), 1020-1023 (petitions and other papers), 1040-1050 (hearings and orders). See also Section 2750 (order pursuant to this chapter affecting legal capacity of conservatee an appealable order). As to the effect of final order, see Section 2103. For background on the provisions of this part, see the Comment to this part under the part heading. See also *Report of Assembly Committee on Judiciary on Assembly Bills Nos. 261 and 167,* reprinted in 15 Cal. L. Revision Comm'n Reports 1061, 1076 (1980).

CHAPTER 5. DISQUALIFICATION FROM VOTING

§ 1910. Disqualification from voting

Comment. Section 1910 continues Section 1910 of the repealed Probate Code without change. See also Section 1865 (restoration of right to vote. For general provisions, see Sections 1000-1004 (rules of practice), 1020-1023 (petitions and other papers), 1040-1050 (hearings and orders). As to the effect of final order, see Section 2103. For

background on the provisions of this part, see the Comment to this part under the part heading. See also *Report of Assembly Committee on Judiciary on Assembly Bills Nos. 261 and 167,* reprinted in 15 Cal. L. Revision Comm'n Reports 1061, 1076 (1980).

CHAPTER 6. STERILIZATION

§ 1950. Legislative intent

Comment. Section 1950 continues Section 1950 of the repealed Probate Code without change.

§ 1951. Ability to consent; definitions

Comment. Section 1951 continues Section 1951 of the repealed Probate Code without change.

§ 1952. Petition for appointment of limited conservator

Comment. Section 1952 continues Section 1952 of the repealed Probate Code without change. See also Section 2356(d) (no minor may be sterilized under this division). For general provisions relating to petitions and other papers, see Sections 1020-1023.

§ 1953. Notice of hearing

Comment. Section 1953 continues Section 1953 of the repealed Probate Code without change. For general provisions relating to notice of hearing, see Sections 1200-1221, 1460-1469. See also Sections 1260-1265 (proof of giving notice), 2700-2702 (notice to persons who request special notice).

§ 1954. Appointment of counsel

Comment. Section 1954 continues Section 1954 of the repealed Probate Code without change.

§ 1954.5. Appointment of facilitator; duties

Comment. Section 1954.5 continues Section 1954.5 of the repealed Probate Code without substantive change.

§ 1955. Coordination of investigation by regional center; examination by physicians; reports

Comment. Section 1955 continues Section 1955 of the repealed Probate Code without substantive change. For general provisions relating to hearings and orders, see Sections 1040-1050.

§ 1956. Presence of conservatee at hearing

Comment. Section 1956 continues Section 1956 of the repealed Probate Code without change.

§ 1957. Consideration of conservatee's views

Comment. Section 1957 continues Section 1957 of the repealed Probate Code without change.

§ 1958. Factors to be established beyond a reasonable doubt before consent to sterilization may be authorized

Comment. Section 1958 continues Section 1958 of the repealed Probate Code without change. For general provisions, see Sections 1000-1004 (rules of practice), 1020-1023 (petitions and other papers), 1040-1050 (hearings and orders).

§ 1959. Vulnerability to unlawful sexual conduct by others

Comment. Section 1959 continues Section 1959 of the repealed Probate Code without change.

§ 1960. Persons who already have conservator

Comment. Section 1960 continues Section 1960 of the repealed Probate Code without change.

§ 1961. Sterilization procedure

Comment. Section 1961 continues Section 1961 of the repealed Probate Code without change.

§ 1962. Statement of decision; automatic appeal

Comment. Section 1962 continues Section 1962 of the repealed Probate Code without change. For general provisions, see Sections 1000-1004 (rules of practice), 1020-1023 (petitions and other papers), 1040-1050 (hearings and orders). As to the effect of final order, see Section 2103.

§ 1963. Payment of court costs and fees

Comment. Section 1963 continues Section 1963 of the repealed Probate Code without substantive change. For general provisions, see Sections 1000-1004 (rules of practice), 1020-1023 (petitions and other papers), 1040-1050 (hearings and orders). As to the effect of final order, see Section 2103. See also Section 1049 (enforcement of order).

§ 1964. Expiration of court order and termination of conservatorship; reappointment

Comment. Section 1964 continues Section 1964 of the repealed Probate Code without change. For general provisions, see Sections 1000-1004 (rules of practice), 1020-1023 (petitions and other papers), 1040-1050 (hearings and orders).

§ 1965. Stay of order pending appeal

Comment. Section 1965 continues Section 1965 of the repealed Probate Code without change.

§ 1966. Material change in circumstances prerequisite to new petition after petition denied

Comment. Section 1966 continues Section 1966 of the repealed Probate Code without change.

§ 1967. Civil and criminal liability

Comment. Section 1967 continues Section 1967 of the repealed Probate Code without substantive change.

§ 1968. Sterilization resulting from other treatment or surgery

Comment. Section 1968 continues Section 1968 of the repealed Probate Code without change.

§ 1969. Rights of developmentally disabled persons capable of giving consent

Comment. Section 1969 continues Section 1969 of the repealed Probate Code without change.

PART 4. PROVISIONS COMMON TO GUARDIANSHIP AND CONSERVATORSHIP

Comment. This part supersedes Part 4 (commencing with Section 2100) of Division 4 of the repealed Probate Code. The superseded part was enacted upon recommendation of the California Law Revision Commission. See *Recommendation Relating to Guardianship-Conservatorship Law,* 14 Cal. L. Revision Comm'n Reports 501 (1978). See also *Report of Assembly Committee on Judiciary on Assembly Bills Nos. 261 and 167,* republished in 15 Cal. L. Revision Comm'n Reports 1061, 1076-89 (1980); *Report of Senate Committee on Judiciary on Assembly Bill No. 261,* republished in 15 Cal. L. Revision Comm'n Reports 1097, 1099 (1980); *Communication from the California Law Revision Commission concerning Assembly Bill 158,* 20 Cal. L. Revision Comm'n Reports 235 (1990). For the Guardianship-Conservatorship Law as enacted in 1979 (Chapter 726 of the Statutes of 1979) with the revisions made by Chapters 89 and 246 of the Statutes of 1980, see *Guardianship-Conservatorship Law,* 15 Cal. L. Revision Comm'n Reports 451 (1980).

CHAPTER 1. GENERAL PROVISIONS

§ 2100. Law governing guardianships and conservatorships

Comment. Section 2100 continues Section 2100 of the repealed Probate Code without substantive change and also makes applicable the general provisions relating to notice in Part 2 (commencing with Section 1200) of Division 3. Section 1452 establishes a specific rule concerning when the right to jury trial exists under this division. See the Comment to Section 1452. For general provisions, see Sections 1000-1004 (rules of practice), 1020-1023 (petitions and other papers), 1040-1050 (hearings and orders), 1200-1221 & 1460-1469 (notice of hearing), 1260-1265 (proof of giving notice), 2700-2702 (notice to persons who request special notice). See also Section 2103 (effect of final order). For

background on the provisions of this part, see the Comment to this part under the part heading.

§ 2101. Relationship is a fiduciary relationship

Comment. Section 2101 restates Section 2101 of the repealed Probate Code without substantive change. A statement that the relationship is a fiduciary relationship has been substituted for the reference to the law relating to trusts. This change is not intended to make any substantive change in the law. The change reflects the repeal of the general provisions relating to confidential relationships in former Civil Code Sections 2215-2244 (repealed by 1986 Cal. Stat. ch. 820, § 7). See also Section 15003(b) (repeal of Civil Code provisions not intended to alter rules applied to fiduciary and confidential relationships). As to the duty to use ordinary care and diligence in managing the estate, see Section 2401 and the Comment thereto. The guardian or conservator may be removed for having such an interest adverse to the faithful performance of duties that there is an unreasonable risk that he or she will fail faithfully to perform duties. Section 2650(f). For background on the provisions of this part, see the Comment to this part under the part heading.

§ 2102. Court supervision

Comment. Section 2102 continues Section 2102 of the repealed Probate Code without change. For background on the provisions of this part, see the Comment to this part under the part heading.

§ 2103. Effect of court authorization, approval, or confirmation

Comment. Subdivision (a) of Section 2103 restates subdivision (a) of Section 2103 of the repealed Probate Code using language consistent with the language used in Section 7250, the comparable provision relating to estates of decedents. Subdivision (b) restates subdivision (b) of Section 2103 of the repealed Probate Code without substantive change. See also Conservatorship of Harvey, 3 Cal. 3d 646, 651, 477 P.2d 742, 91 Cal. Rptr. 510 (1970) (protection extended to conservator's attorney). Under subdivision (b), the guardian or conservator is not released from liability for transactions which are not fully disclosed to the court. See also Section 1049 (enforcement of orders). For related provisions, see Sections 2545 (protection of good faith purchaser of personal property sold without court authorization), 2551(e) & 2552(c) (effect of proceedings for borrowing money and giving security therefor), 2553(d) (effect of proceedings authorizing the giving of lease), 2557 (effect of proceedings authorizing exchange of property). See also Section 2750 (appealable orders). For background on the provisions of this part, see the Comment to this part under the part heading.

§ 2104. Nonprofit charitable corporation as guardian or conservator

Comment. Section 2104 continues Section 2104 of the repealed Probate Code without change. For background on the provisions of this part, see the Comment to this part under the part heading.

§ 2105. Joint guardians or conservators

Comment. Section 2105 continues Section 2105 of the repealed Probate Code without change. Under subdivision (e), the absence of a guardian or conservator from California does not of itself suspend the power to act or participate in joint decision-making. This is the same as the rule for joint personal representatives. See Section 9630(c) and the Comment thereto. For background on the provisions of this part, see the Comment to this part under the part heading.

§ 2105.5. Liability of joint guardian or conservator of estate for breach by other guardian or conservator

Comment. Section 2105.5 continues Section 2105.5 of the repealed Probate Code without change. This section is comparable to the joint liability provision for personal representatives and applies prospectively only. See Section 9631. For background on the provisions of this part, see the Comment to this part under the part heading.

§ 2106. One guardian or conservator for several wards or conservatees

Comment. Section 2106 continues Section 2106 of the repealed Probate Code without change. For general provisions, see Sections 1000-1004 (rules of practice), 1020-1023 (petitions and other papers), 1040-1050 (hearings and orders). For general provisions relating to notice of hearing, see Sections 1200-1221, 1460-1469. See also Sections 1260-1265 (proof of giving notice), 2700-2702 (notice to persons who request special notice). For background on the provisions of this part, see the Comment to this part under the part heading.

§ 2107. Powers and duties of guardian or conservator of nonresident

Comment. Section 2107 continues Section 2107 of the repealed Probate Code without substantive change. This section prescribes powers and duties of a guardian or conservator appointed in California for a nonresident. The court may limit the powers and duties of a guardian or conservator of the person of a nonresident. For example, if a guardian or conservator of the person is appointed for a nonresident for a limited purpose such as to consent to medical treatment, the court may limit the powers and duties of the guardian or conservator to accomplishment of that purpose. Subdivision (a) states only the powers and duties while the ward or conservatee is in this state. Section 2107 does not deal with the powers of the California guardian or conservator of

the person when the nonresident ward or conservatee is not in California. See generally Mayer v. Willing, 196 Cal. App. 2d 379, 16 Cal. Rptr. 476 (1961); 39 Am. Jur. 2d *Guardian and Ward* §§ 26, 219 (1968 & Supp. 1989). For background on the provisions of this part, see the Comment to this part under the part heading.

§ 2108. Additional powers granted nominated guardian

Comment. Section 2108 continues Section 2108 of the repealed Probate Code except that the application of the section covers any nomination in writing and is not restricted to nomination made "by will." The word "letters" is substituted for "letters of guardianship" in subdivision (c). See Section 52(b)(defining "letters").

Subdivision (a) permits the person making the nomination to give the nominated guardian of the person the same authority as a parent, unless the court for good cause determines otherwise. Appointment of a nominated guardian of the person is subject to Section 4600 of the Civil Code relating to custody of a minor. See Section 1514(b). But, if the nominated person is appointed by the court, subdivision (a) of Section 2108 applies.

Subdivision (b) permits the person making the nomination to give a guardian of the estate, or of particular property, authority to act without court authorization as provided in provisions listed in subdivision (b) relating to independent exercise of powers. The court must appoint the person nominated as guardian of the estate (Section 1500) or of particular property (Section 1501) unless the court determines that the nominee is "unsuitable." See Section 1514(c)-(d). If the nominated person is appointed by the court, subdivision (b) of Section 2108 applies.

Where good cause is shown, the court may decline to give the guardian the powers provided in the nominating instrument.

Under Section 2108, the court may grant additional powers to the guardian only "to the extent provided in the nomination." The nominating instrument may grant only one or a few of the specific additional powers permissible under Section 2108, or may provide the broadest grant of additional powers possible under the section. Nothing in Section 2108 precludes the court from granting a nominated guardian additional powers listed in Section 2591 under the independent exercise of powers provisions, even though these additional powers were not granted in the instrument that nominated the guardian.

For background on the provisions of this part, see the Comment to this part under the part heading.

§ 2109. Powers and duties of guardian as to particular property; allocation of duties between guardians

Comment. Section 2109 continues Section 2109 of the repealed Probate Code without change. Subdivision (a) is analogous to subdivision (b) of Section 2107 (guardian of estate of nonresident). Paragraph (1) of subdivision (b) codified Guardianship of Joaquin, 168 Cal. App. 2d 99, 335 P.2d 507 (1959). Paragraph (2) of subdivision (b) authorizes the court in which the general guardianship of the estate is pending to allocate between the two guardians the duties of a guardian of the estate. This permits the court to determine, for example, which guardian will pay particular debts or how much each will contribute to the support of the ward. For general provisions, see Sections 1000-1004 (rules of practice), 1020-1023 (petitions and other papers), 1040-1050 (hearings and orders). For background on the provisions of this part, see the Comment to this part under the part heading.

§ 2110. Liability of guardian or conservator who signs instrument

Comment. Section 2110 is new. It generalizes provisions formerly found in Section 2551(d) and is comparable to Sections 18000 (trust law) and 9606 (decedent estate administration).

§ 2111. Transfer or conveyance of property pursuant to court order

Comment. Section 2111 continues Section 2111 of the repealed Probate Code without change. For comparable provisions relating to decedents' estates, see Sections 7260-7263.

Subdivision (d) permits the guardian or conservator to convey or transfer the title, right, or interest to the same extent as it might have been conveyed or transferred by a person having legal capacity for the transaction. Thus, for example, in a proceeding under Sections 2520-2528, the court might order the guardian or conservator to execute a quitclaim deed to remove a cloud on petitioner's property. Or the court might direct a conveyance of real property to complete a contract and order the guardian or conservator to execute a grant deed that will pass after-acquired title. See Civil Code § 1106; 4 B. Witkin, Summary of California Law Real Property § 136 at 351-52, § 212 at 417-18 (9th ed. 1987). For general provisions, see Sections 1046-1049 (orders), Section 2103 (effect of final order), 2750 (appealable orders). See also Sections 1875 (effect of failure to record order limiting capacity of conservatee), 2550-2557 (notes, mortgages, leases, conveyances, and exchanges). For background on the provisions of this part, see the Comment to this part under the part heading.

§ 2112. Application of federal Indian law

Comment. Section 2112 continues Section 2112 of the repealed Probate Code without change. This section recognizes that there are federal laws concerning guardianship or conservatorship of Indians subject to federal supervision which may be inconsistent with this division. See, e.g., 25 U.S.C. §§ 379 (approval of Secretary of Interior required for certain conveyances), 954 (special rules for guardian or conservator of member of Agua Caliente Band of Palm Springs, California). For background on the provisions of this part, see the Comment to this part under the part heading.

CHAPTER 2. JURISDICTION AND VENUE

Article 1. Jurisdiction and Venue

§ 2200. Jurisdiction in superior court

Comment. Section 2200 continues Section 2200 of the repealed Probate Code without change. For a comparable provision relating to decedents' estates, see Section 7050. For background on the provisions of this part, see the Comment to this part under the part heading.

§ 2201. Venue for residents

Comment. Section 2201 continues Section 2201 of the repealed Probate Code without change. Subdivision (b) permits the court to determine that venue is proper, even though the place of residence is in dispute. See Hillman v. Stults, 263 Cal. App. 2d 848, 871-72, 70 Cal. Rptr. 295, 309 (1968); Guardianship of Smith, 147 Cal. App. 2d 686, 306 P.2d 86 (1957). This avoids the need to litigate the issue of residence if the court determines that continuance of the proceeding in the county where filed is in the best interests of the ward or conservatee. For background on the provisions of this part, see the Comment to this part under the part heading.

§ 2202. Venue for nonresidents

Comment. Section 2202 continues Section 2202 of the repealed Probate Code without substantive change. The provision in subdivisions (a) and (b) that venue is proper in "such other county as may be in the best interests of the proposed ward or proposed conservatee" enables the court of the county where the property is located to determine that venue is proper with respect to the person as well as the estate where a guardianship or conservatorship of the person is necessary in California. For background on the provisions of this part, see the Comment to this part under the part heading.

§ 2203. Court having priority where proceedings commenced in several counties

Comment. Section 2203 continues Section 2203 of the repealed Probate Code without substantive change. For background on the provisions of this part, see the Comment to this part under the part heading.

Article 2. Change of Venue

§ 2210. Definitions

Comment. Section 2210 continues Section 2210 of the repealed Probate Code without change. For background on the provisions of this part, see the Comment to this part under the part heading.

§ 2211. Authority to transfer proceeding

Comment. Section 2211 continues Section 2211 of the repealed Probate Code without change. For general provisions, see Sections 1000-1004 (rules of practice), 1020-1023 (petitions and other papers), 1040-1050 (hearings and orders), 2103 (effect of final order). For background on the provisions of this part, see the Comment to this part under the part heading.

§ 2212. Who may petition for transfer

Comment. Section 2212 continues Section 2212 of the repealed Probate Code without change. For background on the provisions of this part, see the Comment to this part under the part heading.

§ 2213. Contents of petition

Comment. Section 2213 continues Section 2213 of the repealed Probate Code without change. For general provisions relating to petitions and other papers, see Sections 1020-1023. For background on the provisions of this part, see the Comment to this part under the part heading.

§ 2214. Notice of hearing

Comment. Section 2214 continues Section 2214 of the repealed Probate Code without change. For general provisions relating to notice of hearing, see Sections 1200-1221, 1460-1469. See also Sections 1260-1265 (proof of giving notice), 2700-2702 (notice to persons who request special notice). For background on the provisions of this part, see the Comment to this part under the part heading.

§ 2215. Hearing and order

Comment. Section 2215 continues Section 2215 of the repealed Probate Code without change. Subdivision (a) permits any person required to be listed in the petition to support or oppose the petition. These persons are listed in Section 2213. For general provisions, see

Sections 1000-1004 (rules of practice), 1020-1023 (petitions and other papers), 1040-1050 (hearings and orders), 2103 (effect of final order). For background on the provisions of this part, see the Comment to this part under the part heading.

§ 2216. Transfer procedure

Comment. Section 2216 continues Section 2216 of the repealed Probate Code without substantive change. For background on the provisions of this part, see the Comment to this part under the part heading.

CHAPTER 3. TEMPORARY GUARDIANS AND CONSERVATORS

§ 2250. Appointment

Comment. Section 2250 continues Section 2250 of the repealed Probate Code with the substitution of "parent" for "natural parent" in subdivision (c). This substitution requires notice to all parents, including natural parents. For general provisions, see Sections 1000-1004 (rules of practice), 1020-1023 (petitions and other papers), 1040-1050 (hearings and orders), 2103 (effect of final order). See also Section 2751 (appointment of temporary guardian or conservator to exercise power which appeal pending). For background on the provisions of this part, see the Comment to this part under the part heading.

§ 2251. Issuance of letters

Comment. Section 2251 continues Section 2251 of the repealed Probate Code without change. See also Section 2257 (termination of powers of temporary guardian or temporary conservator). Order granting or revoking temporary letters is not an appealable order. See Section 2750. For background on the provisions of this part, see the Comment to this part under the part heading.

§ 2252. Powers and duties

Comment. Section 2252 continues Section 2252 of the repealed Probate Code without substantive change. Under subdivision (b), a temporary guardian or conservator has limited authority with respect to medical treatment for the ward or conservatee unless the court by order limits or expands the authority given by Section 2353 (guardian) or 2354 (conservator). The court might, for example, give a temporary conservator the powers and duties of a conservator under Section 2355 (medical treatment of conservatee adjudicated to lack capacity to give informed consent) where the circumstances require such an order. See also Section 2357 (petition by temporary guardian or conservator for court authorization of medical treatment for ward or conservatee). For

background on the provisions of this part, see the Comment to this part under the part heading.

§ 2253. Change of conservatee's residence generally

Comment. Section 2253 continues Section 2253 of the repealed Probate Code without substantive change. The standard for inability to attend the hearing for medical reasons is comparable to the standard for attendance at the hearing on establishment of a conservatorship (Section 1825). As to removal of the conservatee from his or her residence in an emergency or with the conservatee's informed consent, see Section 2254. For general provisions, see Sections 1000-1004 (rules of practice), 1020-1023 (petitions and other papers), 1040-1050 (hearings and orders), 2103 (effect of final order). For background on the provisions of this part, see the Comment to this part under the part heading.

§ 2254. Removal of conservatee from residence in case of emergency

Comment. Section 2254 continues Section 2254 of the repealed Probate Code without substantive change. For background on the provisions of this part, see the Comment to this part under the part heading.

§ 2255. Inventory and appraisal of estate

Comment. Section 2255 continues Section 2255 of the repealed Probate Code without substantive change. See also Section 2633 (termination before filing of inventory). For background on the provisions of this part, see the Comment to this part under the part heading.

§ 2256. Accounts

Comment. Section 2256 continues Section 2256 of the repealed Probate Code without change. For background on the provisions of this part, see the Comment to this part under the part heading.

§ 2257. Termination

Comment. Section 2257 continues Section 2257 of the repealed Probate Code without change. For background on the provisions of this part, see the Comment to this part under the part heading.

§ 2258. Suspension, removal, resignation, and discharge

Comment. Section 2258 continues Section 2258 of the repealed Probate Code without change. For background on the provisions of this part, see the Comment to this part under the part heading.

CHAPTER 4. OATH, LETTERS, AND BOND

Article 1. Requirement of Oath and Bond

§ 2300. Oath and bond required before appointment effective

Comment. Section 2300 continues Section 2300 of the repealed Probate Code without substantive change. See Section 52(b) (defining "letters"). See also Sections 300-301 (trust company as guardian or conservator of estate), 2922 (bond and oath of public guardian). For background on the provisions of this part, see the Comment to this part under the part heading.

Article 2. Letters

§ 2310. Issuance of letters

Comment. Section 2310 continues Section 2310 of the repealed Probate Code without substantive change. See Section 52(b) (defining "letters"). For background on the provisions of this part, see the Comment to this part under the part heading.

§ 2311. Form of letters

Comment. Section 2311 continues Section 2311 of the repealed Probate Code without substantive change. See Section 52(b) (defining "letters"). See also Sections 1880 (order granting conservator exclusive authority to make medical decisions), 2108 (terms of order under Section 2108, concerning powers of nominated guardian, to be included in letters of guardianship), 2251 (termination date of temporary guardianship or conservatorship), 2252 (powers of temporary guardian or conservator concerning medical treatment), 2300 (oath to be attached to or endorsed upon letters), 2351.5 (change in powers of limited conservator), 2358 (conditions concerning care, treatment, education, and welfare of ward or conservatee), 2402 (conditions concerning care and custody of property of the ward or conservatee), 2594 (powers that may be independently exercised), 2922 (issuance of letters to "the public guardian" of the county without naming the public guardian). See also Gov't Code § 27433 (letters issued to "the public guardian" are sufficient to authorize action by the successor and new letters need not be issued). For background on the provisions of this part, see the Comment to this part under the part heading.

§ 2312. Notice to ward or conservatee

Comment. Section 2312 continues Section 2312 of the repealed Probate Code without substantive change. See Section 52(b) (defining "letters"). For general provisions relating to mailing, see Sections 1215, 1216. For background on the provisions of this part, see the Comment to this part under the part heading.

Article 3. Bonds of Guardians and Conservators

§ 2320. General requirement of bond; amount

Comment. Section 2320 continues Section 2320 of the repealed Probate Code with revisions that conform the section to comparable provisions relating to decedents' estates. Section 2320 is comparable to Sections 8480, 8482, and 8487 (bond of personal representative), with the addition of a provision to make clear that the amount of the bond of a guardian or conservator is to be sufficient to cover public entitlements of the ward or conservatee. The cost of a surety bond is an allowable expense of the guardian or conservator. See Section 2623(a). Section 2328 qualifies Section 2320 by permitting the amount of bond to be reduced when personal property is delivered to a trust company, or money is invested in an insured account in a financial institution, subject to withdrawal only with court authorization. See also Sections 300-301 (trust company as guardian or conservator of estate). As to bond of the public guardian, see Gov't Code § 27434. See also Section 2941(c) (bond fee of public guardian). For background on the provisions of this part, see the Comment to this part under the part heading.

§ 2321. Waiver of bond by conservatee

Comment. Section 2321 continues Section 2321 of the repealed Probate Code without change. For background on the provisions of this part, see the Comment to this part under the part heading.

§ 2322. Guardian or conservator of person only

Comment. Section 2322 continues Section 2322 of the repealed Probate Code without change. For background on the provisions of this part, see the Comment to this part under the part heading.

§ 2323. Small estate

Comment. Section 2323 continues Section 2323 of the repealed Probate Code without change. For background on the provisions of this part, see the Comment to this part under the part heading.

§ 2324. Nominated guardian

Comment. Section 2324 continues Section 2324 of the repealed Probate Code without change. For background on the provisions of this part, see the Comment to this part under the part heading.

§ 2325. Bond of nonprofit charitable corporation

Comment. Section 2325 continues Section 2325 of the repealed Probate Code without change. The cost of the bond is an allowable expense. See Section 2623(a). For background on the provisions of this part, see the Comment to this part under the part heading.

§ 2326. Joint guardians or conservators

Comment. Section 2326 continues Section 2326 of the repealed Probate Code without change. This section is consistent with Section 8480 (bond of personal representative). For background on the provisions of this part, see the Comment to this part under the part heading.

§ 2327. Several wards or conservatees

Comment. Section 2327 continues Section 2327 of the repealed Probate Code without change. For background on the provisions of this part, see the Comment to this part under the part heading.

§ 2328. Deposit of money or other property subject to court control

Comment. Section 2328 restates Section 2328 of the repealed Probate Code revisions to conform Section 2328 to Sections 2453 to 2456. Under Section 2328, a guardian or conservator may deposit jewelry or other personal property of the ward or conservatee with a trust company, subject to withdrawal only on order of court, and have the bond reduced accordingly. For related sections, see Fin. Code §§ 764, 765, 1586. See also Sections 2453 (insured account in financial institution), 2454 (deposit of personal property with trust company), 2456 (deposits withdrawable only on court order). Securities deposited with a trust company under Section 2328 may be deposited in a securities depository. See Section 2455(b). For definitions, see Section 40 ("financial institution"), 46 ("insured account in a financial institution"), 83 ("trust company"). For background on the provisions of this part, see the Comment to this part under the part heading.

§ 2329. Reduction of amount of bond

Comment. Section 2329 continues Section 2329 of the repealed Probate Code without change. See also Code of Civil Procedure Section 996.030 (determination that amount of bond is excessive). For background on the provisions of this part, see the Comment to this part under the part heading.

§ 2330. Additional bond on real property transactions

Comment. Section 2330 restates Section 2330 of the repealed Probate Code without substantive change. For background on the provisions of this part, see the Comment to this part under the part heading.

§ 2333. Suit against sureties on bond; limitation period

Comment. Section 2333 continues Section 2333 of the repealed Probate Code without change. See also Sections 2358 (performance of conditions concerning care, treatment, education, and welfare of ward or conservatee), 2402 (performance of conditions concerning care and

custody of the property of the ward or conservatee). For a comparable provision relating to decedents' estates, see Section 8488. For background on the provisions of this part, see the Comment to this part under the part heading.

§ 2334. Suspension of powers upon filing of petition to require bond or objection to sufficiency of bond

Comment. Section 2334 continues Section 2334 of the repealed Probate Code without substantive change. For general provisions, see Sections 1000-1004 (rules of practice), 1020-1023 (petitions and other papers), 1040-1050 (hearings and orders). See also Section 2250(e) (appointment of temporary guardian or conservator where court suspends powers of guardian or conservator under Section 2334). For background on the provisions of this part, see the Comment to this part under the part heading.

§ 2335. Substitution of surety

Comment. Section 2335 continues Section 2335 of the repealed Probate Code without substantive change. See also Section 2750 (order discharging surety an appealable order). For background on the provisions of this part, see the Comment to this part under the part heading.

Article 4. Registration of Private Professional Conservators

§ 2340. Prerequisite to appointment of private professional conservator

Comment. Section 2340 continues the first paragraph of Section 2340 of the repealed Probate Code without change. The operative date provision in the second paragraph of Section 2340 of the repealed Probate Code is omitted as unnecessary.

§ 2341. Private professional conservator

Comment. Section 2341 continues Section 2341 of the repealed Probate Code without change.

§ 2342. Statement and background check of private professional conservator

Comment. Section 2342 continues Section 2342 of the repealed Probate Code without substantive change.

§ 2343. Annual filing fee

Comment. Section 2343 continues Section 2343 of the repealed Probate Code without change.

CHAPTER 5. POWERS AND DUTIES OF GUARDIAN OR CONSERVATOR OF THE PERSON

§ 2350. Definitions

Comment. Section 2350 continues Section 2350 of the repealed Probate Code without change. This chapter deals with powers and duties of a guardian or conservator of the person. The definitions in Section 2350 permit shorthand reference to such a guardian or conservator in this chapter. If one person is appointed conservator of the person and estate, or guardian of the person and estate, that person has the powers and duties conferred by this chapter. For background on the provisions of this part, see the Comment to this part under the part heading.

§ 2351. Care, custody, control, and education

Comment. Section 2351 continues Section 2351 of the repealed Probate Code without substantive change. Subdivisions (b) and (c) give the court flexibility to make an order appropriate to the particular conservatee. Subdivision (b) is useful because the broad power given the conservator under subdivision (a) may be more than is needed if the conservator is appointed on voluntary petition of a developmentally disabled adult. Subdivision (b) gives the court authority that may be useful in other types of cases where a voluntary or involuntary conservatorship is established. Under subdivision (b), for example, the court has discretion to make an order allowing the conservatee to fix his or her own residence or to make decisions concerning his or her own education. See also Section 2650 (continued failure to perform duties or incapacity to perform duties suitably is grounds for removal of guardian or conservator). For general provisions, see Sections 1000-1004 (rules of practice), 1020-1023 (petitions and other papers), 1040-1050 (hearings and orders), 2103 (effect of final order). See also Sections 1021 (petition to be verified), 1041 (clerk to set petition for hearing). For general provisions relating to notice of hearing, see Sections 1200-1221, 1460-1469. See also Sections 1260-1265 (proof of giving notice), 2700-2702 (notice to persons who request special notice). For background on the provisions of this part, see the Comment to this part under the part heading.

§ 2351.5. Powers of limited conservator

Comment. Section 2351.5 restates Section 2351.5 of the repealed Probate Code without substantive change. For general provisions, see Sections 1000-1004 (rules of practice), 1020-1023 (petitions and other papers), 1040-1050 (hearings and orders), 2103 (effect of final order). See also Sections 1021 (petition to be verified), 1041 (clerk to set petition

for hearing). For general provisions relating to notice of hearing, see Sections 1200-1221, 1460-1469. See also Sections 1260-1265 (proof of giving notice), 2700-2702 (notice to persons who request special notice). See also Section 2650 (continued failure to perform duties or incapacity to perform duties suitably is grounds for removal of guardian or conservator). For background on the provisions of this part, see the Comment to this part under the part heading.

§ 2352. Residence of ward or conservatee

Comment. Section 2352 continues Section 2352 of the repealed Probate Code without change. See also Section 2750 (order granting permission to fix residence at a place not within this state an appealable order). For background on the provisions of this part, see the Comment to this part under the part heading.

§ 2353. Medical treatment of ward

Comment. Section 2353 continues Section 2353 of the repealed Probate Code without substantive change.

Subdivisions (b) and (c) are similar to subdivision (b) of Section 5358 of the Welfare and Institutions Code (Lanterman-Petris-Short Act). See also In re Roger S., 19 Cal. 3d 921, 931, 569 P.2d 1286, 1292, 141 Cal. Rptr. 298, 304 (1977) (minor over 14 has independent right to assert protections of due process clause).

The immunity from liability provided by the second sentence of subdivision (c) does not extend to malpractice. The immunity is only for failure to obtain consent of the patient (the ward) to the surgery.

Subdivision (d) makes clear that Section 2353 does not override such provisions as Civil Code Sections 25.5 (blood donation by minor), 25.7 (minor on active duty with armed services), 34.5 (surgical care related to prevention or treatment of pregnancy), 34.6 (minor living apart from parent or guardian), 34.7 (surgical care related to diagnosis or treatment of contagious disease), 34.8 (surgical care related to diagnosis or treatment of rape victim), 34.9 (surgical care related to diagnosis and treatment of victim of sexual assault). See also Health & Safety Code § 25958 (abortion in case of unemancipated minor). Also, nothing in Section 2353 or elsewhere in this chapter overrides state quarantine regulations. See, e.g., Health & Safety Code §§ 3050-3053.

Section 2353 does not deal with the question of what constitutes informed consent for the purpose of medical treatment. Concerning informed consent, see the Comment to Section 2354.

Unless the court otherwise orders, a temporary guardian of the person has the powers and duties conferred by Section 2353. Section 2252.

For background on the provisions of this part, see the Comment to this part under the part heading.

§ 2354. Medical treatment of conservatee not adjudicated to lack capacity to give informed consent

Comment. Section 2354 continues Section 2354 of the repealed Probate Code without substantive change. This section provides clear guidelines where the conservatee has not been adjudicated to lack capacity to give informed consent for medical treatment. See Section 1880 (adjudication of lack of capacity to give informed consent for medical treatment).

Under subdivision (a), if the conservatee consents to the medical treatment (which includes surgery), there is no restriction imposed by this division on providing the medical treatment to the conservatee. Accordingly, medical personnel may safely rely on the conservatee's informed consent as long as the conservatee has not been adjudicated to lack capacity to give informed consent for medical treatment. This section does not deal with the question of what constitutes informed consent for the purpose of medical treatment. In connection with what constitutes informed consent, see Cobbs v. Grant, 8 Cal. 3d 229, 502 P.2d 1, 104 Cal. Rptr. 505 (1972).

If the medical practitioner is unwilling to rely on consent of the conservatee, the practitioner may also require consent of the conservator. If the medical practitioner is willing to rely on consent of the conservatee alone, a conservator who wishes to forestall the treatment must seek an adjudication under Section 1880 that the conservatee lacks capacity to give informed consent for medical treatment. If the medical practitioner also requires consent of the conservator but the conservator refuses to consent, the conservatee or other interested person may petition the court for an order requiring the conservator to consent. See Section 2357(i).

Consent of the conservator alone is sufficient consent for medical treatment if the conservatee does not object to the treatment. Accordingly, if the conservatee is in such condition that he or she is unable to give consent, consent of the conservator is sufficient since consent of the conservatee is not required under subdivision (a)—all that is required is that the conservatee not object.

Subdivisions (b) and (c) are drawn from Section 5358 of the Welfare and Institutions Code (Lanterman-Petris-Short Act). The immunity from liability provided by the second sentence of subdivision (c) does not extend to malpractice; the immunity goes only to failure to obtain consent of the patient (the conservatee).

Unless the court otherwise orders, a temporary conservator of the person has the powers and duties conferred by Section 2354. See Section 2252.

Section 2354 does not deal with payment of expenses of medical treatment; determining the reasonableness of such expenses and paying them is the responsibility of the conservator of the estate. See Section 2430.

Where involuntary civil mental health treatment is involved, proceedings may be had only under the Lanterman-Petris-Short Act, and not under this division. See Section 2356(a). See also Section 2356(b)-(e) (experimental drugs, convulsive treatment, sterilization, Natural Death Act, durable power of attorney for health care).

For background on the provisions of this part, see the Comment to this part under the part heading.

§ 2355. Medical treatment of conservatee adjudicated to lack capacity to give informed consent

Comment. Section 2355 continues Section 2355 of the repealed Probate Code without change. Subdivision (a) makes clear that, when the conservatee has been adjudicated to lack capacity to give informed consent to medical treatment (Section 1880), the power to give consent rests exclusively with the conservator. The adjudication of lack of capacity referred to in Section 2355 may be included in the order of appointment of the conservator or may be made upon a subsequently filed petition. See Section 1890.

The immunity provided by the last sentence of subdivision (a) does not extend to malpractice; the immunity goes only to failure to obtain consent of the patient (the conservatee). Section 2355 does not deal with the question of what constitutes informed consent. Concerning informed consent, see the Comment to Section 2354. If the conservator fails to consent to or to obtain medical treatment for the conservatee, the court, upon petition of the conservatee or an interested person, may order the conservator to consent to or to obtain such treatment. See Section 2357(i).

Subdivision (b) provides recognition of the religious beliefs of the conservatee prior to conservatorship insofar as those beliefs relate to medical treatment. The subdivision does not limit the authority of the court under Section 2357.

Where involuntary civil mental health treatment is involved, proceedings may be had only under the Lanterman-Petris-Short Act, and not under this division. See Section 2536(a). See also Section 2536(b)-

(e) (experimental drugs, convulsive treatment, sterilization, Natural Death Act). As to sterilization of an adult, see Sections 1950-1969.

For background on the provisions of this part, see the Comment to this part under the part heading.

§ 2356. Prohibited treatment and drugs

Comment. Section 2356 continues Section 2356 of the repealed Probate Code with nonsubstantive revisions and with the addition of paragraph (2) to subdivision (e). See also In re Roger S., 19 Cal. 3d 921, 569 P.2d 1286, 141 Cal. Rptr. 298 (1977) (minor over 14 has independent right to assert protections of due process clause).

Subdivisions (b)-(d) make clear that provisions of other statutes relating to highly intrusive forms of medical treatment are the only provisions under which such treatment may be authorized for a ward or conservatee, thus assuring that procedural safeguards in those provisions will be applied. Subdivision (d) is consistent with Guardianship of Tulley, 83 Cal. App. 3d 698, 146 Cal. Rptr. 266 (1978), and Guardianship of Kemp, 43 Cal. App. 3d 758, 118 Cal. Rptr. 64 (1974). As to sterilization of an adult, see Sections 1950-1969. A guardian or conservator who violates any provision of Section 2356 may be removed. See Section 2650.

For background on the provisions of this part, see the Comment to this part under the part heading.

§ 2357. Court-authorized medical treatment for ward or conservatee

Comment. Section 2357 continues Section 2357 of the repealed Probate Code without change. For general provisions, see Sections 1000-1004 (rules of practice), 1020-1023 (petitions and other papers), 1040-1050 (hearings and orders), 2103 (effect of final order). See also Sections 1021 (petition to be verified), 1041 (clerk to set petition for hearing). For general provisions relating to notice of hearing, see Sections 1200-1221, 1460-1469. See also Sections 1260-1265 (proof of giving notice), 2700-2702 (notice to persons who request special notice).

Section 2357 serves the same purpose as Section 5358.2 of the Welfare and Institutions Code (Lanterman-Petris-Short Act). But Section 2357 provides for notice to interested persons, for appointment of counsel to represent the ward or conservatee where necessary, for presentation to the court of medical affidavits showing the need for medical treatment, and for findings by the court before an order authorizing treatment is made.

Subdivision (i) has no counterpart in the Welfare and Institutions Code section. This subdivision covers the situation where the ward or conservatee or an interested person believes the ward or conservatee

needs medical treatment which the guardian or conservator is unwilling to obtain or has failed to obtain.

As to powers and duties concerning medical treatment generally, see Sections 2252 (temporary guardian or conservator), 2353 (guardian), 2354-2355 (conservator). See also Section 2356 (limitations on application of chapter). For background on the provisions of this part, see the Comment to this part under the part heading.

§ 2358. Additional conditions in order of appointment

Comment. Section 2358 continues Section 2358 of the repealed Probate Code without substantive change. See Section 52 (defining "letters"). For background on the provisions of this part, see the Comment to this part under the part heading.

§ 2359. Instructions from or confirmation by court

Comment. Section 2359 continues Section 2359 of the repealed Probate Code without change. For general provisions, see Sections 1000-1004 (rules of practice), 1020-1023 (petitions and other papers), 1040-1050 (hearings and orders), 2103 (effect of final order). See also Sections 1021 (petition to be verified), 1041 (clerk to set petition for hearing). For general provisions relating to notice of hearing, see Sections 1200-1221, 1460-1469. See also Sections 1260-1265 (proof of giving notice), 2700-2702 (notice to persons who request special notice). For background on the provisions of this part, see the Comment to this part under the part heading.

CHAPTER 6. POWERS AND DUTIES OF GUARDIAN OR CONSERVATOR OF THE ESTATE

Article 1. Definitions and General Provisions

§ 2400. Definitions

Comment. Section 2400 continues Section 2400 of the repealed Probate Code without change. This chapter deals with powers and duties of a guardian or conservator of the estate. The definitions provided by Section 2400 permit shorthand reference in this chapter to such a guardian or conservator. If one person is appointed as conservator of the person and estate or as guardian of the person and estate, that person has the powers and duties conferred by this chapter. For background on the provisions of this part, see the Comment to this part under the part heading.

§ 2401. Duty to manage estate using ordinary care and diligence

Comment. Section 2401 continues Section 2401 of the repealed Probate Code without change. Section 2401 supplements Section 2101

(relationship of guardian and ward and conservator and conservatee is a fiduciary relationship). The standard in subdivision (a) of Section 2401 is consistent with trust principles (see Section 16040), but recognizes that what is ordinary care and diligence varies with the circumstances of each case. In determining what constitutes ordinary care and diligence, a professional guardian or conservator (such as a trust company or the trust department of a bank) will be held to a greater standard of care based on its presumed expertise than a lay guardian or conservator. Cf. Estate of Beach, 15 Cal. 3d 623, 542 P.2d 994, 125 Cal. Rptr. 570 (1975) (executor). Section 2401 applies to all powers and duties of the guardian or conservator, whether or not prior court authorization is required. But see Section 2103 (effect of court authorization or approval). See also Section 2650 (failure to use ordinary case and diligence in management of estate, or continued failure to perform duties or incapacity to perform duties suitably, or having adverse interest, among causes for removal of guardian or conservator).

The duty of management and control stated in subdivision (a) requires that the conservator act diligently in marshaling, taking possession of, and making an inventory of the conservatee's assets. This obligation is imposed on the conservator whether or not the court makes an order under Section 1873 authorizing the conservatee to enter into certain kinds of transactions. As to community property, see Section 3051.

Subdivision (b) of Section 2401 makes clear that ordinary care and diligence may require that the guardian or conservator exercise a power. For example, the guardian or conservator may fail to exercise ordinary care and diligence under the circumstances of the particular estate if the guardian or conservator fails to secure insurance to cover the risk of loss of property of the estate. Subdivision (b) also makes clear that the extent to which a power should be exercised is limited to what is required by the exercise of ordinary care and diligence under all circumstances. Thus, for example, in purchasing insurance covering the estate property, the guardian or conservator should not purchase an amount in excess of the amount that would be purchased using ordinary care and diligence in the management and control of the estate. See also the Comment to Section 2451 (collection of debts). See also Sections 2403 (court may authorize and instruct guardian or conservator or approve and confirm acts of guardian or conservator), 2625 (review of sales, purchases and other transactions not previously authorized or approved at time of accounting).

For a comparable provision for decedents' estates, see Section 9600. For background on the provisions of this part, see the Comment to this part under the part heading.

§ 2401.3. Measure of liability for breach of fiduciary duty

Comment. Section 2401.3 is a new provision that is comparable to Sections 9601 (decedents' estates) and 16440 (trusts). See the Comments to those sections. See also Section 2401.7 (other remedies not affected).

§ 2401.5. Measure of liability for interest

Comment. Section 2401.5 is a new provision that is comparable to Sections 9602 (decedents' estates) and 16441 (trusts). See the Comments to those sections.

§ 2401.7. Other remedies not affected

Comment. Section 2401.7 is a new provision that is comparable to Sections 9603 (decedents' estates) and 16443 (trusts). See the Comments to those sections.

§ 2402. Additional conditions in order of appointment

Comment. Section 2402 continues Section 2402 of the repealed Probate Code without substantive change. See Section 52 ("letters" defined). For background on the provisions of this part, see the Comment to this part under the part heading.

§ 2403. Instructions from or confirmation by court

Comment. Section 2403 continues Section 2403 of the repealed Probate Code without change. This section authorizes the court not only to instruct the conservator in advance but also to confirm actions already taken. See Place v. Trent, 27 Cal. App. 3d 526, 103 Cal. Rptr. 841 (1972). See also Sections 2625 (review of sales, purchases, and other transactions at time of accounting), 2750 (order authorizing or instructing or approving and confirming acts an appealable order). As to the compensation of the guardian or conservator and attorney in connection with obtaining authorization or instructions on a matter not requiring court authorization, see the Comment to Section 2640. For a comparable provision relating to decedents' estates, see Section 9611. For general provisions, see Sections 1000-1004 (rules of practice), 1020-1023 (petitions and other papers), 1040-1050 (hearings and orders), 2103 (effect of final order). See also Sections 1021 (petition to be verified), 1041 (clerk to set petition for hearing). For general provisions relating to notice of hearing, see Sections 1200-1221, 1460-1469. See also Sections 1260-1265 (proof of giving notice), 2700-2702 (notice to persons who request special notice). For background on the provisions of this part, see the Comment to this part under the part heading.

§ 2404. Order compelling guardian or conservator to pay support or debts

Comment. Section 2404 continues Section 2404 of the repealed Probate Code without change. For general provisions relating to notice

of hearing, see Sections 1200-1221, 1460-1469. See also Sections 1260-1265 (proof of giving notice), 2700-2702 (notice to persons who request special notice). For general provisions, see Sections 1000-1004 (rules of practice), 1020-1023 (petitions and other papers), 1040-1050 (hearings and orders), 2103 (effect of final order), 2750 (appealable orders). See also Sections 1021 (petition to be verified), 1041 (clerk to set petition for hearing). For background on the provisions of this part, see the Comment to this part under the part heading.

§ 2405. Submitting disputed claim for summary determination

Comment. Section 2405 continues Section 2405 of the repealed Probate Code with nonsubstantive revisions. See also Section 2750 (appealable orders). For a comparable provision applicable to decedents' estates, see Section 9620.

Section 2405 is designed to reduce the cost of administration of estates and to ease the court's workload by encouraging settlement of disputes relating to the estate by summary proceedings rather than by litigation. See Review of Selected 1968 Code Legislation 226-27 (Cal. Cont. Ed. Bar 1968). Because of the binding effect of a decision under Section 2405, an agreement to submit a dispute for summary determination under the section requires approval of the court in which the guardianship or conservatorship proceeding is pending. See Section 1418 (defining "court").

Under Section 2405, any member of the State Bar (including a court commissioner or referee) may be appointed as a temporary judge. See also Code Civ. Proc. § 259(5) (power of court commissioner to act as temporary judge). Section 2405 does not require that the temporary judge try the matter in a regular courtroom; the temporary judge may try the matter at his or her office or other place.

Nothing in Section 2405 limits the alternative of reference and trial by a referee under Code of Civil Procedure Sections 638-645.1, and those provisions remain applicable to guardianship and conservatorship proceedings.

For background on the provisions of this part, see the Comment to this part under the part heading.

§ 2406. Submitting dispute to arbitration

Comment. Section 2406 continues Section 2406 of the repealed Probate Code without change. This section makes clear that the guardian or conservator may use arbitration to resolve a dispute. Because of the binding effect of a decision under Section 2406, an agreement to submit a controversy to arbitration under the section requires approval of the court

in which the guardianship or conservatorship proceeding is pending. See Section 1418 (defining "court").

Section 2406 has the same scope as the rule applicable to decedents' estates. See Section 9621 and the Comment thereto. For background on the provisions of this part, see the Comment to this part under the part heading.

§ 2407. Application of chapter to community property

Comment. Section 2407 continues Section 2407 of the repealed Probate Code without change. For background on the provisions of this part, see the Comment to this part under the part heading.

§ 2408. Independent administration

Comment. Section 2408 is a new provision, not found in the repealed Probate Code, that is drawn from Section 9640 (decedents' estates). The section makes clear that this chapter does not limit the authority of the guardian or conservator under the independent exercise of powers provisions.

Article 2. Support and Maintenance of Ward or Conservatee and Dependents

§ 2420. Support, maintenance, and education

Comment. Section 2420 continues Section 2420 of the repealed Probate Code without change. As to subdivision (b), see Sections 2541, 2551 (sale or encumbrance of property).

Section 2420 does not require that the guardian or conservator obtain court authorization to make payments for the purposes specified in subdivision (a). See subdivision (d). However many guardians and conservators seek court authorization in advance (as authorized under Section 2403) for providing a monthly sum for support and maintenance of the ward or conservatee and dependents. See W. Johnstone, G. Zillgitt, & S. House, California Conservatorships § 6.40, at 331 (Cal. Cont. Ed. Bar 2d ed. 1983 & Supp. 1989). See also Sections 2111 (orders for sale or encumbrance of property), 2750 (appealable orders).

Subdivision (e) makes clear that the guardian or conservator may obtain advance authority for payments, and may seek any other court authorizations, instructions, approvals, or confirmations that the circumstances require.

For background on the provisions of this part, see the Comment to this part under the part heading.

§ 2421. Personal allowance for ward or conservatee

Comment. Section 2421 continues Section 2421 of the repealed Probate Code without change. If the court makes an order under Section

2421, the allowance paid to the ward or conservatee is subject to the sole control of the ward or conservatee. See generally W. Johnstone, G. Zillgitt, & S. House, California Conservatorships § 6.49, at 342-43 (Cal. Cont. Ed. Bar 2d ed. 1983 & Supp. 1989). For general provisions, see Sections 1000-1004 (rules of practice), 1020-1023 (petitions and other papers), 1040-1050 (hearings and orders), 2103 (effect of final order). See also Sections 1021 (petition to be verified), 1041 (clerk to set petition for hearing). For general provisions relating to notice of hearing, see Sections 1200-1221, 1460-1469. See also Sections 1260-1265 (proof of giving notice), 2700-2702 (notice to persons who request special notice). For background on the provisions of this part, see the Comment to this part under the part heading.

§ 2422. Order authorizing support notwithstanding third party liable

Comment. Section 2422 continues Section 2422 of the repealed Probate Code without change. To accomplish the purposes of this section, the guardian or conservator may use income of the estate and, if necessary, may sell or encumber estate property. See Sections 2420, 2541, 2551. For general provisions, see Sections 1000-1004 (rules of practice), 1020-1023 (petitions and other papers), 1040-1050 (hearings and orders), 2103 (effect of final order), 2750 (appealable orders). See also Sections 1021 (petition to be verified), 1041 (clerk to set petition for hearing). For general provisions relating to notice of hearing, see Sections 1200-1221, 1460-1469. See also Sections 1260-1265 (proof of giving notice), 2700-2702 (notice to persons who request special notice). For background on the provisions of this part, see the Comment to this part under the part heading.

§ 2423. Payment of surplus income to relatives of conservatee

Comment. Section 2423 continues Section 2423 of the repealed Probate Code without substantive change. "Suitable" is substituted for "proper" in subdivision (b(1) to conform to Sections 2420(a) and 2541(a). Section 2423 makes clear that income is not "surplus" if needed for those legally entitled to support from the conservatee. An order granting or denying a petition under this section is an appealable order. See Section 2750. See also Sections 2580-2585 (substituted judgment) which permit gifts to persons other than the spouse and relatives, and gifts of principal as well as income. Unlike other powers and duties in this chapter, Section 2423 applies only to conservatorships and not to guardianships. For general provisions, see Sections 1000-1004 (rules of practice), 1020-1023 (petitions and other papers), 1040-1050 (hearings and orders), 2103 (effect of final order). See also Sections 1021 (petition

to be verified), 1041 (clerk to set petition for hearing). For general provisions relating to notice of hearing, see Sections 1200-1221, 1460-1469. See also Sections 1260-1265 (proof of giving notice), 2700-2702 (notice to persons who request special notice). For background on the provisions of this part, see the Comment to this part under the part heading.

Article 3. Payment of Debts and Expenses

§ 2430. Payment of debts and expenses generally

Comment. Section 2430 continues Section 2430 of the repealed Probate Code without change. An order directing or allowing payment of a debt or claim is an appealable order. See Section 2750. As to compensation of the guardian or conservator and the attorney when court instructions are sought, see the Comment to Section 2640. See also Section 2902 (right of public guardian to recover reasonable costs incurred for protection of property and reasonable compensation for services when another person subsequently appointed as guardian or conservator of the estate). For background on the provisions of this part, see the Comment to this part under the part heading.

§ 2431. Priority for wage claims

Comment. Section 2431 continues Section 2431 of the repealed Probate Code with an increase in the dollar amount of the priority wage claims, making a total of $2,000 that is given priority. This increase conforms the amount of the priority wage claims under Section 2431 to the amount given priority as a wage claim for decedents' estates. See Sections 11402, 11420, 11421 (decedents' estates). The balance of the wage claim not given priority under Section 2431 is payable under subdivision (a)(1) of Section 2430. Nothing in Section 2431 requires the guardian or conservator to obtain court authorization before making the payments required by the section. For general provisions, see Sections 1000-1004 (rules of practice), 1020-1023 (petitions and other papers), 1040-1050 (hearings and orders), 2103 (effect of final order). An order directing or allowing payment of a debt or claim is an appealable order. See Section 2750. For background on the provisions of this part, see the Comment to this part under the part heading.

Article 4. Estate Management Powers Generally

§ 2450. Extent of court supervision

Comment. Section 2450 continues Section 2450 of the repealed Probate Code without change. The exercise of all the powers in this article and the performance of all the duties in this article remain subject to the duty of the guardian or conservator to exercise ordinary care and

diligence in the management of the estate. See Section 2401 and the Comment thereto. Subdivision (b) permits the court to impose other restrictions and conditions on the exercise of powers and duties under this article. See also Section 2403 (permitting the guardian or conservator to seek court authorization, instructions, approval, or confirmation for particular transactions), 2625 (review at time of accounting of sales, purchases, and other transactions not previously authorized or approved), 2750 (appealable orders).

The second sentence of subdivision (a) makes clear that a guardian or conservator may seek court authorization and instructions even though court authorization is not required before exercising a power. Examples of cases where such instructions might be sought can be found in the Comments to Sections 2451 and 2457. If the guardian or conservator is doubtful as to the proper action to take, the guardian or conservator may wish to obtain authorization under Section 2403 before acting or failing to act rather than risk that the court will find on settlement of the accounts that the guardian or conservator failed to use ordinary care and diligence in managing the estate. As to compensation of the guardian or conservator and the attorney in connection with obtaining instructions concerning the exercise of a power where court authorization is not required by statute, see the Comment to Section 2640. See also Section 2103 (effect of court authorization or approval).

The court may add to the list of powers exercisable by the guardian or conservator without court authorization. See Section 2408 and Article 11 (commencing with Section 2590) (independent exercise of powers).

Some powers prescribed in other articles of this chapter are also exercisable without prior court authorization. See, e.g., Sections 2420 (support, maintenance, and education of ward or conservatee and dependents), 2430 (payment of debts), 2431 (wage claims), 2500 (compromises), 2544 (sale of listed stocks and bonds), 2545 (certain sales of tangible personal property), 2555 (certain leases), 2574 (investing in listed securities).

For a comparable provision relating to decedents' estates, see Section 9610. For general provisions, see Sections 1000-1004 (rules of practice), 1020-1023 (petitions and other papers), 1040-1050 (hearings and orders), 2103 (effect of final order). For general provisions relating to notice of hearing, see Sections 1200-1221, 1460-1469. See also Sections 1260-1265 (proof of giving notice), 2700-2702 (notice to persons who request special notice). For background on the provisions of this part, see the Comment to this part under the part heading.

§ 2451. Collection of debts and benefits

Comment. Section 2451 continues Section 2451 of the repealed Probate Code without change. The guardian or conservator must use ordinary care and diligence in managing the estate (Section 2401). This duty ordinarily will require that the guardian or conservator take appropriate action to collect a debt or benefit. But if the potential recovery is less than the cost of taking action that might result in recovery of a debt, Section 2451 does not require the guardian or conservator to act. If there is a question about the propriety of initiating a lawsuit to collect the debt, the guardian or conservator should obtain instructions from the court under Section 2403 before commencing the action. The power granted by Section 2451 may be exercised without court authorization. See Section 2450. See also Section 2750 (appealable orders). For a comparable provision relating to decedents' estates, see Section 9650. For background on the provisions of this part, see the Comment to this part under the part heading.

§ 2452. Checks, warrants, and drafts

Comment. Section 2452 continues Section 2452 of the repealed Probate Code without change. In some instances, the check may not be property of the estate and hence will not be covered by the power granted by this section. See, e.g., Sections 2421 (allowance for ward or conservatee), 2601 (wages of ward or conservatee). The power granted by Section 2452 may be exercised without court authorization. See Section 2450. For background on the provisions of this part, see the Comment to this part under the part heading.

§ 2453. Deposit in insured account in financial institution

Comment. Section 2453 continues Section 2453 of the repealed Probate Code without substantive change. See Section 46 (defining "insured account in a financial institution"). Section 2453 provides independent authority for the deposit or investment of money without court authorization. See Section 2450 (prior court authorization not required). See also Sections 2456 (money or other property withdrawable only on court order), 2328 (effect of deposit of money or property subject to court control in determining amount of bond), and sections referred to in the Comment to Section 2328. For a comparable section relating to decedents' estates, see Section 9700. For background on the provisions of this part, see the Comment to this part under the part heading.

§ 2453.5. Interest on deposits by trust company

Comment. Section 2453.5 continues Section 2453.5 of the repealed Probate Code with the addition of subdivision (b) which is comparable to

Section 9705(b) (decedents' estates). Cf. Section 16225 (trusts). See also Section 2401 (duty of guardian or conservator to manage estate using ordinary care and diligence). For a comparable section relating to decedents' estates, see Section 9705. For background on the provisions of this part, see the Comment to this part under the part heading.

§ 2454. Deposit of personal property with trust company

Comment. Section 2454 continues Section 2454 of the repealed Probate Code without substantive change. See Section 83 (defining "trust company"). The procedure to be followed by the guardian or conservator in exercising the power under Section 2454 is provided in the statutory provisions to which reference is made in the section. See the Comment to Section 2328. See also Section 2456 (deposits withdrawable only on court order). For a comparable section relating to decedents' estates, see Section 9701. For background on the provisions of this part, see the Comment to this part under the part heading.

§ 2455. Deposit of securities in securities depository

Comment. Section 2455 continues Section 2455 of the repealed Probate Code without change. The power granted by Section 2455 may be exercised without court authorization. See Section 2450. For a comparable section relating to decedents' estates, see Section 9702. For background on the provisions of this part, see the Comment to this part under the part heading.

§ 2456. Accounts and deposits withdrawable only on court order

Comment. Section 2456 continues Section 2456 of the repealed Probate Code with the addition of a specific reference to "trust company" in subdivisions (b) and (c). This addition conforms Section 2456 to Section 9703, the comparable section relating to decedents' estates. For background on the provisions of this part, see the Comment to this part under the part heading.

§ 2457. Maintaining home of ward or conservatee and dependents

Comment. Section 2457 continues Section 2457 of the repealed Probate Code without change. The power given by Section 2457 may be exercised without court authorization. See Section 2450. The power to add improvements is not included under this section. If there is doubt as to whether the particular project is permitted under this section, the guardian or conservator should seek court authorization under Section 2403. As to when a power should or should not be exercised, see Section 2401(b) and the Comment thereto. For background on the provisions of this part, see the Comment to this part under the part heading.

§ 2458. Voting rights with respect to corporate shares or memberships or property

Comment. Section 2458 continues Section 2458 of the repealed Probate Code without substantive change. The nonsubstantive revisions conform the language of Section 2458 to that used in Section 9655, the comparable section relating to decedents' estates. See also Corp. Code §§ 702(a) (guardian or conservator may vote shares), 705(a) (person entitled to vote shares may give proxy). The word "meeting" in subdivision (b) includes a meeting of shareholders, members, or property owners, but is not so limited. Subdivision (c) permits authorization of action taken at a defectively noticed meeting by approval of the minutes of the meeting if such approval satisfies the requirements of the Corporations Code or other applicable law. The powers under Section 2458 may be exercised without court authorization. See Section 2450. As to when a power should or should not be exercised, see Section 2401(b) and the Comment thereto.

The court may grant the right to exercise additional powers without prior court authorization under Article 11 (commencing with Section 2590) (independent exercise of powers). These additional powers include the power to exercise stock rights and stock options and the power to participate in and become subject to and to consent to provisions of a voting trust and of a reorganization, consolidation, merger, dissolution, liquidation, or other modification or adjustment affecting estate property. See Section 2591. If authority for independent exercise of such powers has not been granted, the guardian or conservator should obtain court authorization under an applicable provision or under Section 2403 (instructions) before exercising the powers. See also Sections 2544 (sale of listed stocks, bonds, and securities and United States obligations), 2557 (exchange of stocks, bonds, or securities for different stocks, bonds, or securities), 2574 (investment in United States or California obligations and listed stocks, bonds, and securities). For background on the provisions of this part, see the Comment to this part under the part heading.

§ 2459. Life insurance, medical, retirement, and other plans and benefits

Comment. Section 2459 continues Section 2459 of the repealed Probate Code without change. Subdivision (a) gives the guardian or conservator authority to deal with medical, hospital, and other health care policies, plans, or benefits and with disability policies, plans, or benefits. These policies, plans, and benefits are an alternative method of meeting expenses that may be charged against the estate. The authority under this

subdivision may be exercised without court authorization. See Section 2450.

Subdivision (b) gives the conservator more limited power with respect to life insurance, annuity policies, mutual funds, retirement and employee welfare plans, and the like. The authority under subdivision (b), which may be exercised without court authorization (Section 2450), is limited to continuing the plans in force.

Subdivision (d) permits the conservator to borrow on the loan value of an insurance policy to pay current premiums on the policy to keep the policy in force without court authorization if the conservatee followed that practice prior to establishment of the conservatorship. However, absent a showing of such past practice, court authorization is required to borrow on the loan value of the insurance policy to pay current premiums. See subdivision (c).

Under Section 10112 of the Insurance Code, a minor may, with written consent of a parent or guardian, contract for a life, disability, or annuity policy for the benefit of a limited class of persons.

The authority of the guardian or conservator under Section 2459 may be limited by court order (Section 2450), and subdivision (c) requires court authorization under the provisions relating to substituted judgment for actions that affect expectations of beneficiaries of insurance policies or other benefit plans.

As to when a power should or should not be exercised, see Section 2401(b) and the Comment thereto. For general provisions, see Sections 1000-1004 (rules of practice), 1020-1023 (petitions and other papers), 1040-1050 (hearings and orders), 2103 (effect of final order). For general provisions relating to notice of hearing, see Sections 1200-1221, 1460-1469. See also Sections 1260-1265 (proof of giving notice), 2700-2702 (notice to persons who request special notice). For background on the provisions of this part, see the Comment to this part under the part heading.

§ 2460. Liability and casualty insurance

Comment. Section 2460 continues Section 2460 of the repealed Probate Code without change. This section states the power of the guardian or conservator to secure liability and casualty insurance without first obtaining authorization from the court. See Section 2450 (authorization of court not required). As to when a power should or should not be exercised, see Section 2401(b) and the Comment thereto. For a comparable provision relating to decedents' estates, see Section 9656. For background on the provisions of this part, see the Comment to this part under the part heading.

§ 2461. Taxes and tax returns

Comment. Section 2461 continues Section 2461 of the repealed Probate Code without change. Court authorization or approval is not required to exercise the powers under Section 2461. See Section 2450. As to when a power should or should not be exercised, see Section 2401(b) and the Comment thereto. Subdivision (b) is not subject to the limitation on compromises in Section 2502 (compromise in excess of $25,000 requires court approval). Under subdivision (b), the guardian or conservator may, without court authorization, compromise taxes, penalties, and assessments, whether or not in excess of $25,000, and pay to taxing authorities the amount required to be paid under the compromise. For background on the provisions of this part, see the Comment to this part under the part heading.

§ 2462. Representation in actions and proceedings

Comment. Section 2462 continues Section 2462 of the repealed Probate Code with the addition of the reference to guardian or conservator in subdivision (b). This addition makes Section 2462 consistent with Section 9820, the comparable provision relating to decedents' estates. Court authorization is not required to exercise the powers under Section 2462. See Section 2450.

Section 2462 states the general principle that the conservator is authorized to bring or defend actions on behalf of the conservatee. See also Code Civ. Proc. § 372; In re Marriage of Higgason, 10 Cal. 3d 476, 484, 516 P.2d 289, 110 Cal. Rptr. 897, (1973) (minor or conservatee must appear by representative). See also Sections 1210 (duty of guardian or conservator to represent ward or conservatee in estate proceeding), 2463 (partition actions). As to when a power should or should not be exercised, see Section 2401(b) and the Comment thereto. See also the Comment to Section 2451.

For background on the provisions of this part, see the Comment to this part under the part heading.

§ 2463. Partition actions

Comment. Section 2463 continues Section 2463 of the repealed Probate Code without substantive change. Subdivision (a) has been restated using language drawn from Section 9823(b), the comparable provision relating to decedents' estates. For general provisions, see Sections 1000-1004 (rules of practice), 1020-1023 (petitions and other papers), 1040-1050 (hearings and orders), 2103 (effect of final order). See also Sections 1021 (petition to be verified), 1041 (clerk to set petition for hearing). For general provisions relating to notice of hearing, see Sections 1200-1221, 1460-1469. See also Sections 1260-1265 (proof of

giving notice), 2111 (orders affecting real property), 2700-2702 (notice to persons who request special notice). For background on the provisions of this part, see the Comment to this part under the part heading.

§ 2464. Acceptance of deed in lieu of foreclosure or trustee's sale

Comment. Section 2464 continues Section 2464 of the repealed Probate Code with the addition of subdivision (c). This addition makes Section 2464 consistent with Section 9850(c), the comparable provision relating to decedents' estates. For general provisions, see Sections 1000-1004 (rules of practice), 1020-1023 (petitions and other papers), 1040-1050 (hearings and orders), 2103 (effect of final order), 2750 (appealable orders). For general provisions relating to notice of hearing, see Sections 1200-1221, 1460-1469. See also Sections 1260-1265 (proof of giving notice), 2700-2702 (notice to persons who request special notice). For background on the provisions of this part, see the Comment to this part under the part heading.

§ 2465. Abandonment of valueless property

Comment. Section 2465 continues Section 2465 of the repealed Probate Code without change. The power under Section 2465 may be exercised without authorization of the court. See Section 2450. As to when a power should or should not be exercised, see Section 2401(b) and the Comment thereto.

If the property has value, its disposition without court authorization is not permitted under Section 2465. Court authorization is required for its sale or other disposition unless the disposition falls within some other provision—such as Section 2545—permitting disposition without court authorization.

For comparable provisions relating to decedents' estates, see Sections 9780-9788. For background on the provisions of this part, see the Comment to this part under the part heading.

§ 2466. Advances by guardian or conservator

Comment. Section 2466 continues Section 2466 of the repealed Probate Code without substantive change. Except for allowance of interest, court authorization is not required under Section 2466. See Section 2450. For background on the provisions of this part, see the Comment to this part under the part heading.

§ 2467. Care of estate after death of ward or conservatee

Comment. Section 2467 continues Section 2467 of the repealed Probate Code without change. See also Section 2623(e) (allowance of reasonable expenses in care, preservation, and disposition of the estate after death of ward or conservatee). For background on the provisions of this part, see the Comment to this part under the part heading.

Article 5. Compromise of Claims and Actions; Extension, Renewal, or Modification of Obligations

§ 2500. Authority to compromise claims and actions and to extend, renew, or modify obligations

Comment. Section 2500 restates Section 2500 of the repealed Probate Code without substantive change. The requirement that the power may be exercised "if it is to the advantage of the estate" and the reference to the giving of a covenant not to sue have been added. These additions make Section 2500 more consistent with Section 9830 (decedents' estates). Court approval is required for a compromise, extension, renewal, or modification relating to real property (Section 2501), a compromise in excess of a specified amount (Section 2502), a compromise of a claim of the ward or conservatee against the guardian or conservator (Section 2503), support, wrongful death, and personal injury claims (Section 2504). However, the court may add to the list of powers exercisable by the guardian or conservator without court authorization. See Article 11 (commencing with Section 2590) (independent exercise of powers). See also Code Civ. Proc. § 372 (court approval required for compromise or settlement of pending action or proceeding). Subdivisions (b) and (c) of Section 2500 are comparable to Section 2450 (powers of estate management generally). As to when a power should or should not be exercised, see Section 2401(b) and the Comment thereto. See also Section 2101 and the Comment thereto. See also Section 2403 (permitting the guardian or conservator to seek court authorization, instructions, approval, or confirmation for particular transactions), 2625 (review at time of accounting of sales, purchases, and other transactions not previously authorized or approved). Adjudicating the merits of any claim under this article is an appealable judgment or order. See Section 2750. For a comparable provision relating to decedents' estates, see Section 9830. For general provisions, see Sections 1000-1004 (rules of practice), 1020-1023 (petitions and other papers), 1040-1050 (hearings and orders), 2103 (effect of final order). For general provisions relating to notice of hearing, see Sections 1200-1221, 1460-1469. See also Sections 1260-1265 (proof of giving notice), 2700-2702 (notice to persons who request special notice). For background on the provisions of this part, see the Comment to this part under the part heading.

§ 2501. Matters relating to real property

Comment. Section 2501 restates Section 2501 of the repealed Probate Code with the addition of the provision concerning the effect of a right to extend the term of a lease. This revision conforms subdivision (b) to

Sections 2552.5 and 2555 (leases permitted without authorization of court).

As a general rule, Section 2501 requires court approval because title to real property is involved and a court order approving the transaction may be needed for title insurance. See also Section 2111 (recording certified copy of court order authorizing transaction with respect to real property). Adjudicating the merits of any claim under this article is an appealable judgment or order. See Section 2750. Subdivision (b) provides an exception to the requirement of court approval. The subdivision is consistent with Section 2555 (leases permitted without court authorization). For a comparable provision relating to decedents' estates, see Section 9832. For background on the provisions of this part, see the Comment to this part under the part heading.

The court may add to the list of powers exercisable by the guardian or conservator without court authorization. See Article 11 (commencing with Section 2590) (independent exercise of powers).

§ 2502. Compromise in excess of specified amounts

Comment. Section 2502 continues Section 2502 of the repealed Probate Code without substantive change. This section permits compromises and settlements without court approval where the amount to be paid or charged against the estate is not more than $25,000, unless court approval is otherwise required, as, for example, under Section 2501 (matter affecting real property) or under Code of Civil Procedure Section 372 (pending actions and proceedings). Section 2502 does not apply to a claim by the estate. Nor does the section apply to compromises of tax matters. See Section 2461. Adjudicating the merits of any claim under this article is an appealable judgment or order. See Section 2750. For a comparable provision relating to decedents' estates, see Section 9833. For background on the provisions of this part, see the Comment to this part under the part heading.

The court may add to the list of powers exercisable by the guardian or conservator without court authorization. See Article 11 (commencing with Section 2590) (independent exercise of powers).

§ 2503. Compromise of claim of ward or conservatee against guardian or conservator or attorney for guardian or conservator; modification of terms of obligation of guardian or conservator or attorney owing to ward or conservatee or estate

Comment. Section 2503 continues Section 2503 of the repealed Probate Code with the extension of the section to cover transactions with respect to the attorney for the guardian or conservator. This extension makes the coverage of Section 2503 consistent with the coverage of

Section 9834 (decedents' estates). Section 2503 requires court approval because it involves matters where there may be a conflict of interest for the guardian or conservator. Adjudicating the merits of any claim under this article is an appealable judgment or order. See Section 2750. See also Section 2101 (relationship is a fiduciary relationship) and the Comment thereto; Section 16004(a) (transaction in which trustee has interest adverse to beneficiary). See also the Comment to Section 9834, the comparable provision for decedents' estates. For background on the provisions of this part, see the Comment to this part under the part heading.

§ 2504. Support, wrongful death, and personal injury claims

Comment. Section 2504 continues Section 2504 of the repealed Probate Code without change. This section requires court approval because a claim of the type covered by the section may be a major asset of the estate. Adjudicating the merits of any claim under this article is an appealable judgment or order. See Section 2750. For a comparable provision relating to decedents' estates, see Section 9835. For background on the provisions of this part, see the Comment to this part under the part heading.

The court may add to the list of powers exercisable by the guardian or conservator without court authorization. See Article 11 (commencing with Section 2590) (independent exercise of powers).

§ 2505. Court from which approval is to be obtained

Comment. Section 2505 continues Section 2505 of the repealed Probate Code without substantive change. Subdivision (c) applies to cases in federal court and in sister state courts or courts outside the United States. For a comparable provision relating to decedents' estates, see Section 9836. For background on the provisions of this part, see the Comment to this part under the part heading.

§ 2506. Petition for approval of court in guardianship or conservatorship proceeding

Comment. Section 2506 continues Section 2506 of the repealed Probate Code without change. For a comparable provision relating to decedents' estates, see Section 9837. For general provisions, see Sections 1000-1004 (rules of practice), 1020-1023 (petitions and other papers), 1040-1050 (hearings and orders), 2103 (effect of final order). For general provisions relating to notice of hearing, see Sections 1200-1221, 1460-1469. See also Sections 1260-1265 (proof of giving notice), 2700-2702 (notice to persons who request special notice). For background on the provisions of this part, see the Comment to this part under the part heading.

§ 2507. When another statute controls

Comment. Section 2507 continues Section 2507 of the repealed Probate Code without substantive change. Subdivision (a) makes clear that this article has no effect on Code of Civil Procedure Section 372 (compromise of pending action or proceeding) or any other applicable statute. Where approval of a compromise or settlement of an administrative proceeding is required in such proceeding for the compromise or settlement to be valid (see, e.g., Labor Code Section 5001 concerning compromise of a worker's compensation proceeding), subdivision (b) requires that approval of the compromise or settlement be obtained in the administrative proceeding rather than in the guardianship or conservatorship proceeding. For background on the provisions of this part, see the Comment to this part under the part heading.

Article 6. Conveyance or Transfer of Property Claimed to Belong to Ward or Conservatee or Other Person

§ 2520. Petition for order

Comment. Section 2520 continues Section 2520 of the repealed Probate Code without change. For a comparable provision relating to decedents' estates, see Section 9860. For general provisions, see Sections 1000-1004 (rules of practice), 1020-1023 (petitions and other papers), 1040-1050 (hearings and orders), 2103 (effect of final order). Adjudicating the merits of any claim under this article is an appealable judgment or order. See Section 2750. For background on the provisions of this part, see the Comment to this part under the part heading.

§ 2521. Notice of hearing

Comment. Section 2521 restates Section 2521 of the repealed Probate Code with revisions to make the section consistent with Section 9861, the comparable provision relating to decedents' estate. For general provisions relating to notice of hearing, see Sections 1200-1221, 1460-1469. See also Sections 1260-1265 (proof of giving notice), 2700-2702 (notice to persons who request special notice). For background on the provisions of this part, see the Comment to this part under the part heading.

§ 2522. Continuance for preparation for hearing

Comment. Section 2522 continues Section 2522 of the repealed Probate Code without substantive change. For a comparable provision relating to decedents' estates, see Section 9862. See also Section 1043 (continuance for purpose of allowing a response to objection to be made in writing). For background on the provisions of this part, see the Comment to this part under the part heading.

§ 2524. Denial of petition if objection based on venue

Comment. Section 2524 continues Section 2524 of the repealed Probate Code without change. For a comparable provision relating to decedents' estates, see Section 9864. For background on the provisions of this part, see the Comment to this part under the part heading.

§ 2525. Abatement of petition if civil action pending

Comment. Section 2525 continues Section 2525 of the repealed Probate Code without change. Subdivision (b) codifies case law. See Richer v. Superior Court, 63 Cal. App. 3d 748, 755-57, 134 Cal. Rptr. 52 (1976). For a comparable provision relating to decedents' estates, see Section 9865. For background on the provisions of this part, see the Comment to this part under the part heading.

§ 2526. Denial of petition if matter should be determined by civil action

Comment. Section 2526 continues Section 2526 of the repealed Probate Code without change. For a comparable provision relating to decedents' estates, see Section 9866. For background on the provisions of this part, see the Comment to this part under the part heading.

§ 2527. Order

Comment. Section 2527 continues Section 2527 of the repealed Probate Code without change. See Sections 2103 (effect of final order). 2111 (orders and transactions affecting property). Adjudicating the merits of any claim under this article is an appealable judgment or order. See Section 2750. For a comparable provision relating to decedents' estates, see Section 9867. For general provisions, see Sections 1000-1004 (rules of practice), 1020-1023 (petitions and other papers), 1040-1050 (hearings and orders). For background on the provisions of this part, see the Comment to this part under the part heading.

§ 2528. Execution of conveyance or transfer; effect of order

Comment. Section 2528 continues Section 2528 of the repealed Probate Code without substantive change. The phrase that the court may enforce its execution by process has been omitted as unnecessary in view of Section 1049 (enforcement of orders). The court's order is prima facie evidence of the correctness of the proceedings and of the fiduciary's authority to act pursuant to the order. See Estate of Kay, 30 Cal. 2d 215, 220, 181 P.2d 1, 4 (1947); 7 B. Witkin, Summary of California Law *Wills and Probate* § 234, at 5742 (8th ed. 1974); Evid. Code §§ 639, 666. Adjudicating the merits of any claim under this article is an appealable judgment or order. See Section 2750. For a comparable provision relating to decedents' estates, see Section 9868. See also Section 1049

(enforcement of orders), 2103 (effect of final order), 2111 (orders and transactions affecting property). For background on the provisions of this part, see the Comment to this part under the part heading.

Article 7. Sales

§ 2540. Extent of court supervision

Comment. Section 2540 continues Section 2540 of the repealed Probate Code without change. The court may authorize the guardian or conservator to sell property without court authorization. See Article 11 (commencing with Section 2590 (independent exercise of powers). See also Section 2408. See also Section 2625 (review at time of accounting of sales not previously authorized or approved), 2750 (appealable orders). For background on the provisions of this part, see the Comment to this part under the part heading.

§ 2541. Purposes for which sale may be made

Comment. Section 2541 restates Section 2541 of the repealed Probate Code without substantive change. As to the duty to provide comfortable and suitable support, maintenance, and education, see Section 2420. Subdivision (b) is revised to eliminate the preference for sale of personal property before real property is sold. This conforms Section 2541 to subdivision (a) of Section 2543 (mode of sale) and to Section 10000(a), the comparable provisions relating to decedents' estates. For background on the provisions of this part, see the Comment to this part under the part heading.

§ 2542. Terms of sale

Comment. Section 2542 continues Section 2542 of the repealed Probate Code without substantive change. Subdivision (b) has been revised to conform to Section 10315(a) (decedents' estates). The court may add to the list of powers exercisable by the guardian or conservator without court authorization. See Article 11 (commencing with Section 2590) (independent exercise of powers). See also Section 2570 (appealable orders). For background on the provisions of this part, see the Comment to this part under the part heading.

§ 2543. Manner of sale

Comment. Section 2543 supersedes Section 2543 of the repealed Probate Code. Subdivision (a) is revised to conform to Section 10003 (decedents' estates). Under subdivision (a) there is no priority between personal and real property in selling property, whatever the reason that causes the property to be sold.

Subdivision (b) continues subdivision (b) of Section 2543 of the repealed Probate Code without substantive change. Subdivision (b) does

not apply to sales under Section 2544 (listed securities and certain over-the-counter securities) or 2545 (certain tangible personal property).

Subdivision (c) continues subdivision (c) of Section 2543 of the repealed Probate Code, but the statement that the notice be posted at the courthouse of the county where the proceedings described are pending has omitted as unnecessary, this matter being governed by the provisions incorporated by subdivision (b).

The court may add to the list of powers exercisable by the guardian or conservator without court authorization. See Article 11 (commencing with Section 2590) (independent exercise of powers). See also Section 2570 (appealable orders). For general provisions, see Sections 1000-1004 (rules of practice), 1020-1023 (petitions and other papers), 1040-1050 (hearings and orders), 2103 (effect of final order), 2111 (orders for sale or encumbrance of property). See also Sections 1021 (petition to be verified), 1041 (clerk to set petition for hearing). For general provisions relating to notice of hearing, see Sections 1200-1221, 1460-1469. See also Sections 1260-1265 (proof of giving notice), 2700-2702 (notice to persons who request special notice). For a provision relating to decedents' estates that is comparable to subdivision (a), see Section 10003. For background on the provisions of this part, see the Comment to this part under the part heading.

§ 2544. Securities sold on established exchange; certain over-the-counter securities

Comment. Section 2544 continues Section 2544 of the repealed Probate Code with the addition of paragraph (2) of subdivision (a). This section permits sales of securities to be sold on an established stock or bond exchange and certain over-the-counter securities without court authorization, confirmation, or direction. Compare Section 10200(e)(2),(3) (decedents' estates). As to the authority to invest in securities, see Section 2574. As to when a power should or should not be exercised, see Section 2401(b) and the Comment thereto. A sale under Section 2544 is subject to review on settlement of the accounts of the guardian or conservator. See Section 2625. For a comparable provision relasting to decedents' estates, see Section 10200. For background on the provisions of this part, see the Comment to this part under the part heading.

§ 2545. Sale or other disposition of tangible personal property not exceeding $5,000 in value

Comment. Section 2545 continues Section 2545 of the repealed Probate Code without change. This section gives the guardian or conservator broader authority than exists in the case of a probate estate.

The section applies whether or not the property is perishable or is property which may be disposed of without court order in a probate estate (see Sections 10252, 10259).

The reference in subdivision (c) to furniture and furnishings does not include property in commercial use. Hence, consent is not required to sell furniture or furnishings in commercial use. Subdivision (d) protects innocent third persons if the guardian or conservator acts in excess of the authority granted by the section. Subdivision (e) permits sale in such manner as the guardian or conservator considers best under the circumstances.

Sales of tangible personal property that do not fall within Section 2545 are made under the general provisions of this article (Sections 2541-2543). Exchanges of tangible personal property that do not fall within Section 2545 are made under Section 2557. Sales made under Section 2545 are subject to review on settlement of the accounts of the guardian or conservator. See Section 2625.

For background on the provisions of this part, see the Comment to this part under the part heading.

§ 2547. Disposition of proceeds of sale

Comment. Section 2547 continues Section 2547 of the repealed Probate Code without substantive change. For background on the provisions of this part, see the Comment to this part under the part heading.

§ 2548. Limitation of action to recover property sold

Comment. Section 2548 continues Section 2548 of the repealed Probate Code without change. For background on the provisions of this part, see the Comment to this part under the part heading.

Article 8. Notes, Mortgages, Leases, Conveyances, and Exchanges

§ 2550. Extent of court supervision

Comment. Section 2550 continues Section 2550 of the repealed Probate Code without change. A court order authorizing the transaction may be obtained under this article or under another applicable provision such as Section 2403 (authorization and instructions from court). See also Section 2625 (review at time of accounting of transactions not previously authorized or approved by the court). For a provision permitting exchanges of certain tangible personal property without authorization of the court, see Section 2545. The court may add to the list of powers the guardian or conservator may exercise without court authorization. See Article 11 (commencing with Section 2590)

(independent exercise of powers). See also Sections 2111 (order for sale or encumbrance of property), 2750 (appealable orders). For background on the provisions of this part, see the Comment to this part under the part heading.

§ 2551. Borrowing money and giving security therefor

Comment. Section 2551 restates Section 2551 of the repealed Probate Code without substantive change. The reference to hearing petitions and objections thereto has been omitted from the introductory clause of subdivision (c). This reference is unnecessary in light of Section 1046. The remainder of subdivision (c) has been restated without substantive change to conform to Section 9804(b) (decedents' estates). Subdivision (d) is revised to delete the provision relating the personal liability of the guardian or conservator. This matter is governed by Section 2110 (liability of guardian or conservator who signs instrument. For general provisions, see Sections 1000-1004 (rules of practice), 1020-1023 (petitions and other papers), 1040-1050 (hearings and orders), 2103 (effect of final order), 2111 (orders and transactions affecting property), 2750 (appealable orders). For general provisions relating to notice of hearing, see Sections 1200-1221, 1460-1469. See also Sections 1260-1265 (proof of giving notice), 2700-2702 (notice to persons who request special notice). The second sentence of subdivision (a) is comparable to Section 2547 (sales). For comparable provisions relating to decedents' estates, see Sections 9800, 9802-9806. For background on the provisions of this part, see the Comment to this part under the part heading.

§ 2552. Refinancing or improving or repairing property

Comment. Section 2552 continues the substance of Section 2552 of the repealed Probate Code with the addition of subdivision (c). This addition is drawn from subdivision (c) of Section 9806, the comparable provision relating to decedents' estates. See also Sections 2103 (effect of final order), 2111 (orders and transactions affecting property), 2750 (appealable orders). For comparable provisions relating to decedents' estates, see Sections 9800-9801. For background on the provisions of this part, see the Comment to this part under the part heading.

§ 2552.5. Lease term

Comment. Section 2552.5 is a new provision drawn from subdivision (b) of Section 9940 (decedents' estates).

§ 2553. Order authorizing lease required

Comment. Section 2553 continues Section 2553 of the repealed Probate Code without substantive change. The portion relating to hearing the petition and any objection has been omitted as unnecessary in

view of Section 1046. For general provisions, see Sections 1000-1004 (rules of practice), 1020-1023 (petitions and other papers), 1040-1050 (hearings and orders), 2103 (effect of final order), 2111 (orders and transactions affecting property), 2750 (appealable orders). For general provisions relating to notice of hearing, see Sections 1200-1221, 1460-1469. See also Sections 1260-1265 (proof of giving notice), 2700-2702 (notice to persons who request special notice). For comparable provisions relating to decedents' estates, see Sections 9942-9945. For background on the provisions of this part, see the Comment to this part under the part heading.

§ 2554. Terms and conditions of leases

Comment. Section 2554 continues Section 2554 of the repealed Probate Code with revisions to conform the section to Section 9946 and subdivision (c) of Section 9947, the comparable provisions relating to decedents' estates. These conforming revisions add references to geothermal energy and a community oil lease to Section 2554. See also Sections 2103 (effect of final order), 2111 (orders affecting property), 2750 (appealable orders). For background on the provisions of this part, see the Comment to this part under the part heading.

§ 2555. Leases permitted without court authorization

Comment. Section 2555 restates Section 2555 of the repealed Probate Code without substantive change. For a comparable provision relating to decedents' estates, see Section 9941. For background on the provisions of this part, see the Comment to this part under the part heading.

§ 2556. Dedication or conveyance of real property or easement with or without consideration

Comment. Section 2556 restates the substance of Section 2556 of the repealed Probate Code using language drawn from Section 9900, the comparable provision relating to decedents' estates. For general provisions, see Sections 1000-1004 (rules of practice), 1020-1023 (petitions and other papers), 1040-1050 (hearings and orders), 2103 (effect of final order), 2111 (orders and transactions affecting property), 2750 (appealable orders). For general provisions relating to notice of hearing, see Sections 1200-1221, 1460-1469. See also Sections 1260-1265 (proof of giving notice), 2700-2702 (notice to persons who request special notice). For background on the provisions of this part, see the Comment to this part under the part heading.

§ 2557. Exchange of property

Comment. Section 2557 restates Section 2557 of the repealed Probate Code without substantive change, with the addition of provisions in

subdivision (b) stating the contents of the petition and the addition of subdivision (f). The provision stating the contents of the petition has been drawn from Section 9921, the comparable provision relating to decedents' estates. Subdivision (f) is comparable to Section 9923 (decedents' estates). Subdivision (d) has been revised to recognize that the court may order that notice be given for a shorter period as an alternative to dispensing with notice. For general provisions, see Sections 1000-1004 (rules of practice), 1020-1023 (petitions and other papers), 1040-1050 (hearings and orders), 2103 (effect of final order), 2111 (orders and transactions affecting property), 2750 (appealable orders). For general provisions relating to notice of hearing, see Sections 1200-1221, 1460-1469. See also Sections 1260-1265 (proof of giving notice), 2700-2702 (notice to persons who request special notice). For comparable provisions relating to decedents' estates, see Sections 9920-9922. See also Section 10200 (sale or surrender for redemption or conversion of securities). For background on the provisions of this part, see the Comment to this part under the part heading.

Article 9. Investments and Purchase of Property

§ 2570. Authority to invest generally; petition; hearing; order

Comment. Section 2570 continues Section 2570 of the repealed Probate Code without substantive change. The provision that the court shall hear the petition and any objections has been omitted as unnecessary in view of Section 1046. Subdivision (a) provides general authority for the investment of surplus funds of the estate in real property or tangible or intangible personal property. An investment made under Section 2570 requires court authorization. Other provisions in this article and elsewhere permit specific types of investments without the need for court authorization. For example, see Sections 2453 (account in financial institution), 2574 (United States and State of California obligations and listed stocks, bonds, and other securities). For general provisions, see Sections 1000-1004 (rules of practice), 1020-1023 (petitions and other papers), 1040-1050 (hearings and orders), 2103 (effect of final order). For general provisions relating to notice of hearing, see Sections 1200-1221, 1460-1469. See also Sections 1260-1265 (proof of giving notice), 2700-2702 (notice to persons who request special notice). See also Section 2403 (permitting the guardian or conservator to seek court authorization, instructions, approval, or confirmation for particular transactions), 2625 (review at time of accounting of sales, purchases, and other transactions not previously authorized or approved). For background on the provisions of this part, see the Comment to this part under the part heading.

§ 2571. Purchase of home for ward or conservatee or dependents

Comment. Section 2571 continues Section 2571 of the repealed Probate Code without change. A purchase under this section requires court authorization under Section 2570. For general provisions, see Sections 1000-1004 (rules of practice), 1020-1023 (petitions and other papers), 1040-1050 (hearings and orders), 2103 (effect of final order). For background on the provisions of this part, see the Comment to this part under the part heading.

§ 2572. Order authorizing purchase of real property

Comment. Section 2572 continues Section 2572 of the repealed Probate Code without change. As to community property, see Sections 3020, 3023. For general provisions, see Sections 1000-1004 (rules of practice), 1020-1023 (petitions and other papers), 1040-1050 (hearings and orders), 2103 (effect of final order), 2111 (orders and transactions affecting property), 2750 (appealable orders). For background on the provisions of this part, see the Comment to this part under the part heading.

§ 2573. Order authorizing investment in government bonds

Comment. Section 2573 continues Section 2573 of the repealed Probate Code without substantive change. For background on the provisions of this part, see the Comment to this part under the part heading.

§ 2574. United States and State of California obligations; listed stocks, bonds, and other securities

Comment. Section 2574 continues Section 2574 of the repealed Probate Code without substantive change. Subdivision (a)(1) is revised using language drawn from Section 9730(a), the comparable provision relating to decedents' estates. Subdivision (a) eliminates the need to apply in advance for a court order to invest or reinvest as described. Subdivision (b) requires consideration of the circumstances of the estate and the time when protective proceedings will likely terminate.

Section 2574 is consistent with scheme of Section 2544 which permits sale of listed securities and certain over-the-counter securities without court authorization, but departs from comparable provisions relating to probate estates which require a court order for sale of securities (Section 10200).

An investment in a government obligation, stock, bond, or security that is not one described in Section 2574 may be made only if court authorization is obtained under Section 2570. An investment made under Section 2574 is subject to court review on settlement of the accounts of the guardian or conservator. See Section 2625.

For a comparable provision relating to decedents' estates, see Section 9730. For background on the provisions of this part, see the Comment to this part under the part heading.

Article 10. Substituted Judgment

Comment. This article (commencing with Section 2580) codifies the court-recognized doctrine of substituted judgment. See Estate of Christiansen, 248 Cal. App. 2d 398, 56 Cal. Rptr. 505 (1967); Conservatorship of Wemyss, 20 Cal. App. 3d 877, 98 Cal. Rptr. 85 (1971). For prior cases discussing gifts of surplus income for religious or charitable purposes to carry out the presumed wishes of an incompetent ward, see Harris v. Harris, 57 Cal. 2d 367, 369 P.2d 481, 19 Cal. Rptr. 793 (1962); Guardianship of Hall, 31 Cal. 2d 157, 187 P.2d 396 (1947).

For gifts of income from the conservatorship estate, this article supplements Section 2423 which authorizes payments of surplus income to the spouse and to relatives within the second degree of the conservatee under certain circumstances. Gifts of surplus income under this article are not limited to the spouse and such relatives.

For background on the provisions of this part, see the Comment to this part under the part heading.

§ 2580. Petition to authorize proposed action

Comment. Section 2580 continues Section 2580 of the repealed Probate Code without change. Section 2580 is drawn in part from Mass. Ann. Laws ch. 201, § 38 (West 1958 & Supp. 1989). See also 20 Pa. Cons. Stat. Ann. § 5536(b) (Purdon 1975 & Supp. 1989); Uniform Probate Code § 5-408 (1987).

For general provisions relating to petitions and other papers, see Sections 1020-1023.

Subdivision (a) indicates three situations where substituted judgment may be exercised:

(1) Where the action proposed to be taken by the conservator is for the benefit of the conservatee or the estate.

(2) Where the proposed action is designed to minimize taxes (such as federal, state, or local income taxes or estate taxes) or expenses of administration during the lifetime and on death of the conservatee.

(3) Where there is a person to whom the conservatee probably would have made gifts or provided support from excess funds or assets, or where there are charities or other objects of bounty which the conservatee showed an inclination to support.

The nonexclusive listing in subdivision (b) of the types of actions which may be proposed in the petition is drawn in part from the Massachusetts and Pennsylvania statutes and from Uniform Probate

Code Section 5-408(3) (1987). As to transactions involving community property, see Section 3102(f).

For general provisions, see Sections 1000-1004 (rules of practice), 1020-1023 (petitions and other papers), 1040-1050 (hearings and orders), 2103 (effect of final order). See also Sections 1021 (petition to be verified), 1041 (clerk to set petition for hearing). For background on the provisions of this article, see the Comment to this article under the article heading. See also *Recommendation Relating to Disclaimer of Testamentary and Other Interests,* 16 Cal. L. Revision Comm'n Reports 207, 229-31 (1982).

§ 2581. Notice of hearing

Comment. Section 2581 continues Section 2581 of the repealed Probate Code without substantive change. The phrase "other than the petitioner or persons joining in the petition" has been omitted as unnecessary in view of Section 1201. For general provisions relating to notice of hearing, see Sections 1200-1221, 1460-1469. See also Sections 1260-1265 (proof of giving notice), 2700-2702 (notice to persons who request special notice). For background on the provisions of this article, see the Comment to this article under the article heading.

§ 2582. Consent or lack of capacity of conservatee; adequate provision for conservatee and dependents

Comment. Section 2582 continues Section 2582 of the repealed Probate Code without change. Subdivision (a) precludes an order under this article if the conservatee has legal capacity for the proposed action and is opposed to it. This is consistent with Estate of Christiansen, 248 Cal. App. 2d 398, 56 Cal. Rptr. 505 (1967), permitting exercise of substituted judgment for a conservatee who is "insane" or "incompetent." Subdivision (b) recognizes that the conservatee and those legally entitled to support, maintenance, and education from the conservatee have first claim on the income and assets of the estate. For general provisions relating to hearings and orders, see Sections 1040-1050. See also Section 2750 (appealable orders). For background on the provisions of this article, see the Comment to this article under the article heading.

§ 2583. Circumstances considered in determining whether to approve proposed action

Comment. Section 2583 continues Section 2583 of the repealed Probate Code without substantive change.

This section gives the court discretion and flexibility in applying the doctrine of substituted judgment under the circumstances of the case. The listing in Section 2583 is not exclusive, and the weight to be given to any particular matter listed depends on the circumstances of the case.

Subdivision (k) lists a relevant consideration absent a showing of contrary intent. See Estate of Christiansen, 248 Cal. App. 2d 398, 414, 424, 56 Cal. Rptr. 505, 516, 522-23 (1967) (court will not assume conservatee is abnormally selfish unless that trait is established). A matter not listed may be significant in a particular case. For example, the conservatee may have received property from a parent with the understanding that the conservatee would leave the property to the descendants of that parent. Such an understanding would be a circumstance the court should consider with other relevant circumstances. For general provisions relating to hearings and orders, see Sections 1040-1050. For background on the provisions of this article, see the Comment to this article under the article heading.

§ 2584. Order

Comment. Section 2584 continues Section 2584 of the repealed Probate Code without change. For general provisions, see Sections 1000-1004 (rules of practice), 1020-1023 (petitions and other papers), 1040-1050 (hearings and orders), 2103 (effect of final order), 2111 (orders and transactions affecting property). See also Section 2750 (granting or denying petition under this chapter is an appealable order). For background on the provisions of this article, see the Comment to this article under the article heading.

§ 2585. No duty to propose action

Comment. Section 2585 continues Section 2585 of the repealed Probate Code without change. This section makes clear that a conservator is not liable for failure to propose an estate plan or other action under this article even though the conservatee, if competent and acting as a reasonably prudent person, would have developed an estate plan or would have taken other action to minimize taxes or expenses of administration. The remedy for a person who believes that some action should be taken by the conservator under this article is to petition under Section 2580 for an order requiring the conservator to take such action with respect to estate planning or making gifts as is set out in the petition. For background on the provisions of this article, see the Comment to this article under the article heading.

§ 2586. Production of conservatee's will and other relevant estate plan documents

Comment. Section 2586 continues Section 2586 of the repealed Probate Code without substantive change. This section permits the court to require production of the conservatee's estate plan for confidential examination in proceedings under this article. Under the Evidence Code, the conservator is the holder of the lawyer-client privilege when the client

has a conservator. Evid. Code § 953(b). Under Evidence Code Section 912, the holder of the lawyer-client privilege may waive it. Accordingly, there is no need to rely on Section 2586 if the conservator is willing to waive the lawyer-client privilege and have the lawyer produce the will or other document for consideration in a proceeding under this article. However, Section 2586 provides a procedural means for permitting examination of the will or other document while protecting its confidentiality to the extent practical where it is not in possession of the lawyer who drafted it for the conservatee, where the conservator refuses to waive the lawyer-client privilege, or where it is desired to preserve confidentiality of the document to the extent permitted by the section.

The court has discretion whether to order production of a document under Section 2586. Such an order may not be needed where the document is not reasonably necessary to a determination of the petition filed under Section 2580. The court might compel production of a document under Section 2586 but, after reviewing it, return it to the custodian without further disclosure if the court determines further disclosure is not necessary because the document is not significant to a determination of the petition.

The court may decline to order production of a document if its disclosure is contrary to the conservatee's desire expressed when competent. Whether the document should be produced in this case depends on its importance in determining whether to authorize or require the action proposed in the petition.

For background on the provisions of this article, see the Comment to this article under the article heading.

Article 11. Independent Exercise of Powers

Comment. Article 11 (commencing with Section 2590) permits the court to authorize an experienced and qualified guardian or conservator to exercise one or more powers to which the article applies without the need to petition for court authorization in each instance a power is to be exercised. In appropriate cases, use of the authority under this article will save time and expense in managing the estate while preserving adequate safeguards through the requirement of accounting. For background on the provisions of this part, see the Comment to this part under the part heading.

§ 2590. Order granting authority for independent exercise of powers

Comment. Section 2590 continues Section 2590 of the repealed Probate Code without change. For general provisions, see Sections 1000-1004 (rules of practice), 1020-1023 (petitions and other papers), 1040-1050 (hearings and orders), 2103 (effect of final order), 2111

(orders and transactions affecting property). In determining whether to make an order under this article, the court shall consider the circumstances of the case, the need to grant the power or powers, the qualifications of the guardian or conservator, and the expense of obtaining court authorization for each exercise of the power or powers requested if the petition were to be denied.

If sale of real property is authorized, it is not necessary to comply with Article 7 of this chapter, since the ward or conservatee would not have to do so if competent. However, the guardian or conservator must use ordinary care and diligence in the management of the estate. See Section 2401. The court may withdraw or limit a power previously granted under this article. See Section 2593.

Although, if so ordered, powers may be exercised under this article without notice, hearing, authorization, instruction, approval, or confirmation, a transaction not previously authorized, approved, or confirmed by the court is subject to review by the court on the next accounting of the guardian or conservator. See Section 2625.

For background on the provisions of this article, see the Comment to this article under the article heading.

§ 2591. Powers that may be granted

Comment. Section 2591 continues Section 2591 of the repealed Probate Code without change. Except to the extent the court for good cause otherwise orders, a nominated guardian may, to the extent provided in the nomination, exercise any one or more of the powers listed in Section 2591 without notice, hearing, or court authorization, instructions, approval, or confirmation. See Section 2108.

The listing of a power in this section does not require the guardian or conservator to obtain an order under this article to exercise the power. See Section 2595(b). In some instances, a power listed in this section may be exercised by the guardian or conservator without court authorization under another provision of this division. See, e.g., Section 2555 (certain leases permitted without court authorization). However, the power is listed in this section because, in other instances, exercise of the same power requires authorization, and an order under this article may permit exercise of the power without such court authorization. See, e.g., Sections 2553 (leases generally), 2457 (repair and maintenance of home of ward or conservatee and dependents), 2500-2507 (compromise of claims and actions).

For background on the provisions of this article, see the Comment to this article under the article heading.

§ 2592. Petition

Comment. Section 2592 continues Section 2592 of the repealed Probate Code without change. For general provisions, see Sections 1000-1004 (rules of practice), 1020-1023 (petitions and other papers), 1040-1050 (hearings and orders), 2103 (effect of final order). For general provisions relating to notice of hearing, see Sections 1200-1221, 1460-1469. See also Sections 1260-1265 (proof of giving notice), 2700-2702 (notice to persons who request special notice). For background on the provisions of this article, see the Comment to this article under the article heading.

§ 2593. Withdrawal or subsequent limitation of powers

Comment. Section 2593 continues Section 2593 of the repealed Probate Code without change. For general provisions, see Sections 1000-1004 (rules of practice), 1020-1023 (petitions and other papers), 1040-1050 (hearings and orders), 2103 (effect of final order). For general provisions relating to notice of hearing, see Sections 1200-1221, 1460-1469. See also Sections 1260-1265 (proof of giving notice), 2700-2702 (notice to persons who request special notice). For background on the provisions of this article, see the Comment to this article under the article heading.

§ 2594. Contents of letters; when new letters required

Comment. Section 2594 continues Section 2594 of the repealed Probate Code without change. For background on the provisions of this article, see the Comment to this article under the article heading.

§ 2595. Use of other statutory authorizations or procedures not precluded

Comment. Section 2595 continues Section 2595 of the repealed Probate Code without change. Subdivision (b) makes clear that this article does not preclude the exercise of powers under other provisions of law. See the Comment to Section 2591 (last paragraph). As to compensation of the guardian or conservator and attorney in connection with obtaining court instructions on exercise of powers granted under this article, see the Comment to Section 2640. For background on the provisions of this article, see the Comment to this article under the article heading.

CHAPTER 7. INVENTORY AND ACCOUNTS

Article 1. Definitions and General Provisions

§ 2600. Definitions

Comment. Section 2600 continues Section 2600 of the repealed Probate Code without substantive change. If one person is appointed

conservator of the person and estate or guardian of the person and estate, that person has the powers and duties provided in this chapter. For background on the provisions of this part, see the Comment to this part under the part heading.

§ 2601. Wages of ward or conservatee

Comment. Section 2601 continues Section 2601 of the repealed Probate Code without substantive change. For background on the provisions of this part, see the Comment to this part under the part heading.

Article 2. Inventory and Appraisal of Estate

§ 2610. Filing inventory and appraisal

Comment. Section 2610 continues Section 2610 of the repealed Probate Code without change. For comparable provisions relating to decedents' estates, see Sections 8800, 8852(a). See also Sections 2614.5 (court order requiring filing inventory and appraisal and removal of guardian or conservator who fails to comply with order), 2650 (removal of guardian or conservator for failure to file inventory within time allowed by law or by court order), 2633 (order dispensing with need to file inventory and appraisal where guardianship or conservatorship terminates before inventory has been filed), 2700(c)(2) (request for special notice of inventories and appraisals), 2943 (appraisal of small estate by public guardian). For background on the provisions of this part, see the Comment to this part under the part heading. See also *Report of Senate Committee on Judiciary on Assembly Bill No. 261,* 15 Cal. L. Revision Comm'n Reports 1097, 1099 (1980).

§ 2611. Sending copy to Director of Mental Health or Director of Developmental Services

Comment. Section 2611 continues Section 2611 of the repealed Probate Code without substantive change. See also Section 1216 (personal delivery in lieu of mailing). For background on the provisions of this part, see the Comment to this part under the part heading.

§ 2612. Sending copy to county assessor

Comment. Section 2612 continues Section 2612 of the repealed Probate Code without substantive change. See also Section 1216 (personal delivery in lieu of mailing). For background on the provisions of this part, see the Comment to this part under the part heading.

§ 2613. Subsequently discovered or acquired property; supplemental inventory and appraisal

Comment. Section 2613 continues Section 2613 of the repealed Probate Code without substantive change. Wages or salaries of the ward

or conservatee from employment during the guardianship or conservatorship are not part of the estate unless ordered by the court. See Section 2601. For a comparable provision relating to decedents' estates, see Section 8801. For background on the provisions of this part, see the Comment to this part under the part heading.

§ 2614. Objections to appraisals

Comment. Section 2614 continues Section 2614 of the repealed Probate Code without substantive change. For general provisions, see Sections 1000-1004 (rules of practice), 1020-1023 (petitions and other papers), 1040-1050 (hearings and orders), 2103 (effect of final order). For general provisions relating to notice of hearing, see Sections 1200-1221, 1460-1469. See also Sections 1260-1265 (proof of giving notice), 2700-2702 (notice to persons who request special notice). For a comparable provision relating to decedents' estates, see Section 8906. For background on the provisions of this part, see the Comment to this part under the part heading.

§ 2614.5. Order to file inventory and appraisal

Comment. Section 2614.5 continues Section 2602 of the repealed Probate Code without substantive change insofar as that section dealt with failure to file an inventory and appraisal. This section provides a procedure for requiring an inventory and appraisal short of removing the guardian or conservator. See also Section 2650 (removal of guardian or conservator for failure to file inventory or render account). For general provisions, see Sections 1000-1004 (rules of practice), 1020-1023 (petitions and other papers), 1040-1050 (hearings and orders), 2103 (effect of final order). For general provisions relating to notice of hearing, see Sections 1200-1221, 1460-1469. See also Sections 1260-1265 (proof of giving notice), 2700-2702 (notice to persons who request special notice). For a comparable provision relating to decedents' estates, see Section 8804. For background on the provisions of this part, see the Comment to this part under the part heading.

§ 2615. Damages for failure to file inventory

Comment. Section 2615 restates Section 2615 of the repealed Probate Code without substantive change. For a comparable provision relating to decedents' estates, see Section 8804. For background on the provisions of this part, see the Comment to this part under the part heading.

Article 2.5. Examination Concerning Assets of Estate

§ 2616. Examination concerning assets of estate

Comment. Section 2616 restates Section 2616 of the repealed Probate Code with the following changes. Some of the language of the revised

section is drawn from Section 8870(a) (decedents' estates). Subdivision (b) has been revised to conform it more closely to Section 8870(a) (decedents' estates). The last sentence of subdivision (c), which incorporated by reference Sections 8871-8874 (decedents' estates), has been deleted. In its place, provisions drawn from Sections 8871-8874 have been added to this article. See Sections 2617-2619.5. Subdivision (d) is new and continues Section 8870(c) as that section was applied to guardianship and conservatorship proceedings by former subdivision (c) of Section 2616. For general provisions, see Sections 1000-1004 (rules of practice), 1020-1023 (petitions and other papers), 1040-1050 (hearings and orders), 1240-1242 (citations).

§ 2617. Written interrogatories

Comment. Section 2617 is new and continues Section 8871 as that section was applied to guardianship and conservatorship proceedings by former subdivision (c) of Section 2616.

§ 2618. Examination in court

Comment. Section 2618 is new and continues Section 8872 as that section was applied to guardianship and conservatorship proceedings by former subdivision (c) of Section 2616.

§ 2619. Citation to person controlling estate property

Comment. Section 2619 is new and is drawn from Section 8873 (decedents' estates).

§ 2619.5. Double damages

Comment. Section 2619.5 is new and continues Section 8874 as that section was applied to guardianship and conservatorship proceedings by former subdivision (c) of Section 2616.

Article 3. Accounts

§ 2620. Presentation of account periodically for settlement and allowance; contents of account; petition may include other requests

Comment. Section 2620 continues Section 2620 of the repealed Probate Code without substantive change. See also Sections 1021 (verification of account), 2420 (payments for support, maintenance, and education), 2421 (personal allowance for ward or conservatee), 2614,5 (court order requiring account upon removal of guardian or conservator for failure to file inventory and appraisal), 2629 (court order requiring filing of account and removal of guardian or conservator who fails to comply with order), 2633 (account where guardianship or conservatorship terminates before inventory of estate has been filed), 2650 (removal of guardian or conservator for failure to file account

within time allowed by law or by court order), 2750 (order settling account is an appealable order).

Subdivision (e) makes clear that the petition for approval of the account may include such additional requests as requests for compensation for the guardian or conservator of the person or estate or for the attorney, monthly allowance for support of the conservatee and dependents, periodic payments to the guardian or conservator or attorney, or distribution of excess income to relatives of the conservatee. The courts generally prefer to determine these kinds of matters when an account is being settled. W. Johnstone, G. Zillgitt, & S. House, California Conservatorships § 12.1, at 698-99, § 12.9, at 703-04 (Cal. Cont. Ed. Bar 2d ed. 1983 & Supp. 1989).

For comparable provisions relating to decedents' estates, see Sections 10900 (contents of account), 10950 (when account required). For background on the provisions of this part, see the Comment to this part under the part heading.

§ 2620.1. Conservatee's status report

Comment. Section 2620.1 continues Section 2620.1 of the repealed Probate Code without change.

§ 2620.2 Failure to file account

Comment. Section 2620.2 continues Section 2620.2 of the repealed Probate Code without change.

§ 2621. Notice of hearing

Comment. Section 2621 continues Section 2621 of the repealed Probate Code without change. Unless notice is given or waived as provided in Section 1461, if the account is settled without giving notice to the Director of Mental Health or the Director of Developmental Services in cases where notice is required under Section 1461, the statute of limitations does not run against any claim of the State Department of Mental Health or the State Department of Developmental Services against the estate for board, care, maintenance, or transportation. See Section 1461(d). For general provisions relating to notice of hearing, see Sections 1200-1221, 1460-1469. See also Sections 1260-1265 (proof of giving notice), 2700-2702 (notice to persons who request special notice). For background on the provisions of this part, see the Comment to this part under the part heading.

§ 2622. Objections to account

Comment. Section 2622 continues Section 2622 of the repealed Probate Code without change. See Section 1043 (handling of objections). For background on the provisions of this part, see the Comment to this part under the part heading.

§ 2623. Allowance for expenses, compensation, and disbursements

Comment. Section 2623 continues Section 2623 of the repealed Probate Code without substantive change. See also Section 2750 (order fixing, directing, authorizing, or allowing payment of compensation or expenses of guardian or conservator or fixing, directing, authorizing, or allowing payment of the compensation of the attorney is an appealable order). The amount incurred in the performance of the duties of the guardian or conservator includes amounts paid for support, maintenance, or education of the ward or conservatee and of persons legally entitled to support, maintenance or education from the ward or conservatee. See Sections 2420 (support, maintenance, and education), 2421 (personal allowance for ward or conservatee), 2430-2431 (payment of debts). For background on the provisions of this part, see the Comment to this part under the part heading.

§ 2624. Investment of cash

Comment. Section 2624 continues Section 2624 of the repealed Probate Code without substantive change. For background on the provisions of this part, see the Comment to this part under the part heading.

§ 2625. Review of sales, purchases, and other transactions

Comment. Section 2625 continues Section 2625 of the repealed Probate Code without substantive change.

Section 2620 requires disclosure of transactions occurring during the period covered by the account: Subdivision (c) of Section 2620 requires that the account contain itemized schedules showing the transactions, and subdivision (d)(1) requires a description of all sales, purchases, changes in the form of assets, or other transactions that are not readily understandable from the schedules. If the transactions have been previously authorized, approved, or confirmed by the court, they need not again be reviewed under Section 2625. See Section 2103 (effect of court authorization, approval, or confirmation). However, other transactions—those that did not require court authorization and those that did require court authorization but were made without it—are subject to review under Section 2625 at the time of the accounting. See also Section 2750 (appealable orders).

The fact that a transaction required prior court authorization which was not obtained does not preclude the court from approving and confirming the transaction at the time of the accounting or on a petition for approval and confirmation under Section 2403. See Place v. Trent, 27 Cal. App. 3d 526, 103 Cal. Rptr. 841 (1972). However, if the transaction required court authorization which was not obtained, when it is reviewed under

Section 2625 the guardian or conservator must justify the transaction in the same manner that would have been required had authorization been sought before the transaction was made. And the guardian or conservator runs a risk that the court will not approve and confirm the transaction at the time of the accounting. A guardian or conservator may be surcharged for improper payments or other wrongful acts or omissions that cause pecuniary damage to the estate. W. Johnstone, G. Zillgitt, & S. House, California Conservatorships § 12.45, at 727 (Cal. Cont. Ed. Bar 2d ed. 1983 & Supp. 1989). Nevertheless, unless the court determines that the transaction was improper because the guardian or conservator failed to use ordinary care and diligence (Section 2401) or for some other reason, the court should approve and confirm the transaction when it reviews the current account. But if the court determines that there was loss from failure to use ordinary care and diligence, the court may surcharge the guardian or conservator. Cf. Estate of Hilde, 112 Cal. App. 2d 189, 246 P.2d 79 (1952) (administrator surcharged where estate property sold below appraised value without required court authorization).

For background on the provisions of this part, see the Comment to this part under the part heading.

§ 2626. Termination of proceeding upon exhaustion of estate

Comment. Section 2626 continues Section 2626 of the repealed Probate Code without change. If it appears that the guardianship or conservatorship estate will be replenished by new assets, this section does not require termination of the proceeding. See also Section 2750 (order discharging guardian or conservator is an appealable order). For background on the provisions of this part, see the Comment to this part under the part heading.

§ 2627. Settlement of accounts and release by ward; discharge of guardian

Comment. Section 2627 continues Section 2627 of the repealed Probate Code without change. A former guardian has the burden of showing that a release given by the ward pursuant to subdivision (a) is just and fair. Smith v. Fidelity & Deposit Co., 130 Cal. App. 45, 56-57, 19 P.2d 1018, 1023 (1933). Such a release does not discharge the guardian, however, since the discharge must be granted by the court. See also Section 2630 (ward's majority does not cause court to lose jurisdiction to settle accounts). For background on the provisions of this part, see the Comment to this part under the part heading.

§ 2628. No accounting required for certain small estates

Comment. Section 2628 continues Section 2628 of the repealed Probate Code without change. The purpose of this section is to reduce

the expense of administration of small estates. In determining whether the monthly income of the estate satisfies the small estate requirements, income from public benefit payments is excluded. These payments are: (1) state aid and medical assistance (Welf. & Inst. Code §§ 11000-15754), (2) services for the care of children (Welf. & Inst. Code §§ 16100-16515), (3) county aid and relief to indigents (Welf. & Inst. Code §§ 17000-17410), (4) federal old age, survivors, and disability insurance benefits (42 U.S.C.A. §§ 401-431 (West 1983 & Supp. 1989)), and (5) federal supplemental security income for the aged, blind, and disabled (42 U.S.C.A. §§ 1381-1383c (West 1983 & Supp. 1989)). For general provisions, see Sections 1000-1004 (rules of practice), 1020-1023 (petitions and other papers), 1040-1050 (hearings and orders). See also Sections 1021 (petition to be verified), 1041 (clerk to set petition for hearing). For general provisions relating to notice of hearing, see Sections 1200-1221, 1460-1469. See also Sections 1260-1265 (proof of giving notice), 2700-2702 (notice to persons who request special notice). For background on the provisions of this part, see the Comment to this part under the part heading.

§ 2629. Compelling filing of account

Comment. Section 2629 is a new provision that supersedes Section 2602 of the repealed Probate Code insofar as that section related to failure to file the account. Section 2629 is drawn from Sections 11050-11052 (decedents' estates). See also Sections 1240-1242 (citations). This section may also be used to compel an account by a guardian or conservator whose authority is terminated. See Section 2653. See also Section 2655 (removal from office if found in contempt for disobeying court order). For background on the provisions of this part, see the Comment to this part under the part heading.

Article 4. Accounts on Termination of Relationship

§ 2630. Continuing jurisdiction of court

Comment. Section 2630 continues Section 2630 of the repealed Probate Code without change. For background on the provisions of this part, see the Comment to this part under the part heading.

§ 2631. Death of ward or conservatee; disposition of assets

Comment. Section 2631 continues Section 2631 of the repealed Probate Code without substantive change, except that subdivision (b) is revised to substitute a reference to Section 13100 ($60,000 limit, excluding property described in Section 13050, for use of affidavit procedure for collection or transfer of personal property without probate) for the $10,000 limit found in Section 2631 of the repealed Probate Code.

Subdivision (b) also authorizes a court order for liquidation of the decedent ward's or conservatee's estate whether or not required for payment of expenses. This generalizes a provision of former Welfare and Institutions Code Section 8012 (disposition of property by public guardian). If the guardian or conservator pays expenses from assets of the ward or conservatee which are the subject of a specific gift by will, the rules of abatement set forth in Sections 21400-21406 apply. Cf. Estate of Mason, 62 Cal. 2d 213, 397 P.2d 1005, 42 Cal. Rptr. 13 (1965). For background on the provisions of this part, see the Comment to this part under the part heading.

§ 2632. Account of dead, incapacitated, or absconding guardian or conservator

Comment. Section 2632 supersedes Section 2632 of the repealed Probate Code. Section 2632 uses language drawn from Section 10953 (decedents' estates). The court referred to in this section is the court in which the guardianship or conservatorship proceeding is pending. See also Section 2642 (attorney's petition for payment for services provided by attorney). For background on the provisions of this part, see the Comment to this part under the part heading.

§ 2633. Termination before inventory is filed

Comment. Section 2633 continues Section 2633 of the repealed Probate Code without substantive change. This section authorizes the court to dispense with the inventory and appraisal where the conservatee dies a few days after appointment of a conservator. This will permit the court, in its discretion, to waive the inventory and permit an accounting of assets actually marshalled, thereby avoiding (1) the need to inventory estate assets—such as stocks, oil rights, or real property—where the conservator has not yet taken possession or control of the asset and (2) the resulting additional fees for the conservator and needless delay in turning the estate over to the personal representative of the deceased conservatee. For general provisions, see Sections 1000-1004 (rules of practice), 1020-1023 (petitions and other papers), 1040-1050 (hearings and orders), 2103 (effect of final order). For background on the provisions of this part, see the Comment to this part under the part heading.

CHAPTER 8. COMPENSATION OF GUARDIAN, CONSERVATOR, AND ATTORNEY

§ 2640. Petition by guardian or conservator of estate

Comment. Section 2640 continues Section 2640 of the repealed Probate Code without substantive change. The court may also authorize

periodic payments on account to the guardian or conservator or attorney. See Section 2643.

The matter of compensation for services of the guardian or conservator and attorney in obtaining instructions from the court is left to the discretion of the court. The court has discretion whether to allow compensation where instructions are sought concerning (1) a transaction not requiring court authorization or (2) a transaction covered by a previous order granting authority for independent exercise of powers. See, e.g., Sections 2450 (right to petition for instructions concerning exercise of estate management powers), 2595 (right to petition for instructions where authority for independent exercise of powers has been granted). See also the Comment to Section 2450. The court should allow compensation where instructions are sought unless the court determines that the petition for instructions was not reasonably necessary under the circumstances.

Notwithstanding the authority of the guardian or conservator of the estate to petition under Section 2640 for an order fixing the compensation of the guardian or conservator of the person or the attorney, the guardian or conservator of the person or the attorney may also petition for such an order. See Sections 2641 (guardian or conservator of person), 2642 (attorney). As to compensation of the guardian or conservator of the person, see the Comment to Section 2641. For general provisions, see Sections 1000-1004 (rules of practice), 1020-1023 (petitions and other papers), 1040-1050 (hearings and orders), 2103 (effect of final order), 2750 (appealable orders). For general provisions relating to notice of hearing, see Sections 1200-1221, 1460-1469. See also Sections 1260-1265 (proof of giving notice), 2700-2702 (notice to persons who request special notice).

For background on the provisions of this part, see the Comment to this part under the part heading.

§ 2641. Petition by guardian or conservator of person

Comment. Section 2641 continues Section 2641 of the repealed Probate Code without change. The court has discretion whether to allow the guardian or conservator of the person compensation, since allowance of compensation is required only where it is just and reasonable. For general provisions, see Sections 1000-1004 (rules of practice), 1020-1023 (petitions and other papers), 1040-1050 (hearings and orders), 2103 (effect of final order), 2750 (appealable orders). For general provisions relating to notice of hearing, see Sections 1200-1221, 1460-1469. See also Sections 1260-1265 (proof of giving notice), 2700-2702 (notice to

persons who request special notice). For background on the provisions of this part, see the Comment to this part under the part heading.

§ 2642. Petition by attorney

Comment. Section 2642 continues Section 2642 of the repealed Probate Code without change. For general provisions, see Sections 1000-1004 (rules of practice), 1020-1023 (petitions and other papers), 1040-1050 (hearings and orders), 2103 (effect of final order), 2750 (appealable orders). For general provisions relating to notice of hearing, see Sections 1200-1221, 1460-1469. See also Sections 1260-1265 (proof of giving notice), 2700-2702 (notice to persons who request special notice). See also the Comment to Section 2640.

§ 2643. Order authorizing periodic payments of compensation to guardian or conservator or attorney

Comment. Section 2643 continues Section 2643 of the repealed Probate Code without substantive change. This section makes clear that the court, in its discretion, may authorize periodic payments of compensation. Similar authority to authorize periodic payments of compensation to a trustee is found in Section 15682. Section 2643 permits the court, for example, to authorize the guardian or conservator of the estate to make a payment each month on account to the attorney for services rendered during the immediately preceding month.

An order under Section 2643 may be useful for a large estate where there may be tax advantages from making periodic payments of compensation. Where a guardian or conservator of the person is compensated and devotes substantial time to the care of the ward or conservatee, periodic payments may be needed. Periodic payments also avoid problems that may exist when payment is delayed: The payments provide funds on a current basis to cover out-of-pocket expenses, avoid the need to determine questions that turn on the value of loss of use of money caused by delay in payment, and protect against variations in the value of money which may be significant in an inflationary period. Where services are rendered on a periodic basis, Section 2643 avoids the need for frequent accountings or petitions for compensation.

The periodic payments are "on account." Actual compensation is determined when the court reviews the account of the guardian or conservator. At that time, payments are reviewed by the court in light of services actually rendered. If the total of periodic payments is too low to be just and reasonable compensation for the guardian or conservator or attorney, the court should allow additional compensation for services actually rendered. If the amount paid is unreasonably high for services actually rendered, the court should make an appropriate order. Such an

order might require the guardian or conservator to credit the excess paid against amounts to be paid for future services.

For general provisions, see Sections 1000-1004 (rules of practice), 1020-1023 (petitions and other papers), 1040-1050 (hearings and orders), 2103 (effect of final order), 2750 (appealable orders). For general provisions relating to notice of hearing, see Sections 1200-1221, 1460-1469. See also Sections 1260-1265 (proof of giving notice), 2700-2702 (notice to persons who request special notice). For background on the provisions of this part, see the Comment to this part under the part heading.

§ 2644. Contingent fee contract with attorney

Comment. Section 2644 continues Section 2644 of the repealed Probate Code without substantive change. This section makes clear that the guardian or conservator may, with court authorization or approval, make a contingent fee contract with an attorney. The contract may, but need not, be made prior to the rendering of any services by the attorney. For general provisions, see Sections 1000-1004 (rules of practice), 1020-1023 (petitions and other papers), 1040-1050 (hearings and orders), 2103 (effect of final order). For general provisions relating to notice of hearing, see Sections 1200-1221, 1460-1469. See also Sections 1260-1265 (proof of giving notice), 2700-2702 (notice to persons who request special notice). For background on the provisions of this part, see the Comment to this part under the part heading.

CHAPTER 9. REMOVAL OR RESIGNATION

Article 1. Removal of Guardian or Conservator

§ 2650. Causes for removal

Comment. Section 2650 continues Section 2650 of the repealed Probate Code without substantive change. The procedure for removal is specified in Sections 2651-2654. The duty to use ordinary care and diligence is imposed by Section 2401. See also Sections 2614.5 (removal for failure to file inventory and appraisal as required by order), 2629 (removal for failure to account). For a comparable provision relating to decedents' estates, see Section 8502. For background on the provisions of this part, see the Comment to this part under the part heading.

§ 2651. Petition for removal

Comment. Section 2651 continues Section 2651 of the repealed Probate Code without change. For general provisions relating to petitions and other papers, see Sections 1020-1023. This section is comparable to Section 1861 (termination of conservatorship) and Section

8500(a) (decedents' estates). For general provisions, see Sections 1000-1004 (rules of practice), 1020-1023 (petitions and other papers), 1040-1050 (hearings and orders), 2103 (effect of final order). See also Sections 1021 (petition to be verified), 1041 (clerk to set petition for hearing). For background on the provisions of this part, see the Comment to this part under the part heading.

§ 2652. Notice of hearing

Comment. Section 2652 continues Section 2652 of the repealed Probate Code without change. This section is comparable to Section 1862 (termination of conservatorship). Under Section 2654, the court may suspend the powers of the guardian or conservator pending notice and hearing. For general provisions relating to notice of hearing, see Sections 1200-1221, 1460-1469. See also Sections 1260-1265 (proof of giving notice), 2700-2702 (notice to persons who request special notice). For background on the provisions of this part, see the Comment to this part under the part heading.

§ 2653. Hearing and judgment

Comment. Section 2653 continues Section 2653 of the repealed Probate Code with the addition of the last sentence in subdivision (b) which is drawn from Section 10952 (decedents' estates). For general provisions, see Sections 1000-1004 (rules of practice), 1020-1023 (petitions and other papers), 1040-1050 (hearings and orders), 2103 (effect of final order). See also Section 2750 (revoking letters, other than temporary letters, an appealable order). This section is comparable to subdivisions (a) and (b) of Section 1863 (termination of conservatorship). For comparable provisions relating to decedents' estates, see Sections 8500(c), 8501. For background on the provisions of this part, see the Comment to this part under the part heading.

There is no right to jury trial in removal proceedings. See Section 1452. Despite the removal, the court retains jurisdiction to settle the accounts of the guardian or conservator. See Section 2630. As to the account of an incapacitated or absconding guardian or conservator, see Section 2632.

§ 2654. Surrender of estate and suspension of powers pending hearing

Comment. Section 2654 continues Section 2654 of the repealed Probate Code without change. See also Section 2250(e) (appointment of temporary guardian or conservator where powers of guardian or conservator are suspended under Section 2654). For a comparable provision relating to decedents' estates, see the second sentence of

Section 8500(b). For background on the provisions of this part, see the Comment to this part under the part heading.

§ 2655. Contempt

Comment. Section 2655 is a new provision drawn from Section 8505 (decedents' estates). See also Sections 2653 (revocation of letters), 2680 (successor personal representative).

Article 2. Resignation of Guardian or Conservator

§ 2660. Resignation of guardian or conservator

Comment. Section 2660 continues Section 2660 of the repealed Probate Code without change. This section is comparable to Section 15640 (resignation of trustee). See also Section 8520 (vacancy caused by resignation of personal representative). For general provisions, see Sections 1000-1004 (rules of practice), 1020-1023 (petitions and other papers), 1040-1050 (hearings and orders), 2103 (effect of final order), 2750 (appealable orders). For general provisions relating to notice of hearing, see Sections 1200-1221, 1460-1469. See also Sections 1260-1265 (proof of giving notice), 2700-2702 (notice to persons who request special notice). For background on the provisions of this part, see the Comment to this part under the part heading.

The court may appoint a successor to the resigning guardian or conservator after notice and hearing. See Sections 2670, 2680. The court may appoint a temporary guardian or conservator if necessary. See Section 2250. Despite the resignation, the court retains jurisdiction to settle the accounts of the guardian or conservator. See Section 2630.

CHAPTER 9.5. APPOINTMENT OF SUCCESSOR GUARDIAN OR CONSERVATOR

Comment. This chapter supersedes Chapter 9.5 (commencing with Section 2670) of Part 4 of Division 4 of the repealed Probate Code. The superseded chapter was enacted upon recommendation of the California Law Revision Commission. See *Recommendation Relating to Revision of the Guardianship-Conservatorship Law,* 15 Cal. L. Revision Comm'n Reports 1463 (1980).

Article 1. Appointment of Successor Guardian

§ 2670. Court authorized to appoint successor guardian

Comment. Section 2670 continues Section 2670 of the repealed Probate Code without change. For general provisions, see Sections 1000-1004 (rules of practice), 1020-1023 (petitions and other papers), 1040-1050 (hearings and orders), 2103 (effect of final order). For general provisions relating to notice of hearing, see Sections 1200-1221, 1460-

1469. See also Sections 1260-1265 (proof of giving notice), 2700-2702 (notice to persons who request special notice). For a comparable provision relating to decedents' estates, see Section 8522. For background on the provisions of this chapter, see the Comment to this chapter under the chapter heading.

Article 2. Appointment of Successor Conservator

§ 2680. Court authorized to appoint successor conservator

Comment. Section 2680 continues Section 2680 of the repealed Probate Code without change. For a comparable provision relating to decedents' estates, see Section 8522. For background on the provisions of this chapter, see the Comment to this chapter under the chapter heading.

§ 2681. Who may file petition

Comment. Section 2681 continues Section 2681 of the repealed Probate Code without change. For general provisions relating to petitions and other papers, see Sections 1020-1023. This section is comparable to subdivision (a) of Section 1820 (petition for initial appointment of conservator). For background on the provisions of this chapter, see the Comment to this chapter under the chapter heading.

§ 2682. Contents of petition

Comment. Section 2682 continues Section 2682 of the repealed Probate Code without change. For general provisions relating to petitions and other papers, see Sections 1020-1023. This section is comparable to Section 1821 (petition for initial appointment of conservator). For background on the provisions of this chapter, see the Comment to this chapter under the chapter heading.

§ 2683. Notice of hearing

Comment. Section 2683 continues Section 2683 of the repealed Probate Code without substantive change. The phrase "other than the petitioner or persons joining in the petition" has been omitted as unnecessary in view of Section 1201. Section 2683 is comparable to Section 1822 (notice on initial appointment of conservator). Notice may be personally delivered instead of being mailed. See Section 1216. For general provisions relating to notice of hearing, see Sections 1200-1221, 1460-1469. See also Sections 1260-1265 (proof of giving notice), 2700-2702 (notice to persons who request special notice). If the conservatee is an "absentee" as defined in Section 1403, notice must be given as provided in Sections 1842 and 2683, except that notice need not be given to the conservatee. See Section 2689. For background on the provisions of this chapter, see the Comment to this chapter under the chapter heading.

§ 2684. Interview and report by court investigator

Comment. Section 2684 continues Section 2684 of the repealed Probate Code without change. This section is comparable to Section 1826 (interview and report of court investigator on initial appointment of conservator). If the conservatee is unable to retain legal counsel and requests the court to appoint counsel, or if the court determines that appointment of counsel would be helpful to the resolution of the matter or is necessary to protect the interests of the conservatee, the court must appoint the public defender or private counsel to represent the conservatee in proceedings under this article. See Section 1471. An interview and report by the court investigator is not required under Section 2684 if the conservatee is an "absentee" as defined in Section 1403. See Section 2689. For background on the provisions of this chapter, see the Comment to this chapter under the chapter heading.

§ 2685. Information to conservatee by court

Comment. Section 2685 continues Section 2685 of the repealed Probate Code without change. This section is comparable to Section 1828 (information to proposed conservatee by court on initial appointment of conservator). If the conservatee is unable to retain legal counsel and requests the court to appoint counsel, or if the court determines that appointment of counsel would be helpful to the resolution of the matter or is necessary to protect the interests of the conservatee, the court must appoint the public defender or private counsel to represent the conservatee in proceedings under this article. See Section 1471. For background on the provisions of this chapter, see the Comment to this chapter under the chapter heading.

§ 2686. Conservatee fails to attend hearing

Comment. Section 2686 continues Section 2686 of the repealed Probate Code without change. This section ensures that the conservatee is informed of his or her rights before a successor conservator is appointed. For background on the provisions of this chapter, see the Comment to this chapter under the chapter heading.

§ 2687. Persons who may support or oppose petition

Comment. Section 2687 continues Section 2687 of the repealed Probate Code without change. See also Section 1043 (objections to petition). This section is comparable to Section 1829 (persons who may support or oppose petition for initial appointment of conservator). "Interested person" includes state, local, or federal entities and employees. See Section 1424. For background on the provisions of this chapter, see the Comment to this chapter under the chapter heading.

§ 2688. Order appointing successor conservator

Comment. Section 2688 continues Section 2688 of the repealed Probate Code without change. Subdivision (a) makes clear that the order of preference for appointment as conservator in Section 1812 applies to selection of a successor conservator, and that a nomination made under Section 1810 or 1811 will be given the same weight as on initial appointment of a conservator. Subdivision (b) is comparable to Section 1830 (order for initial appointment of conservator).

There is no right to trial by jury on appointment of a successor conservator. See Section 1452. This is consistent with the rule applicable to initial appointment of a conservator (as distinguished from establishment of conservatorship), where there is no right to trial by jury. See the Comment to Section 1827.

For general provisions, see Sections 1000-1004 (rules of practice), 1020-1023 (petitions and other papers), 1040-1050 (hearings and orders), 2103 (effect of final order), 2750 (appealable orders). For background on the provisions of this chapter, see the Comment to this chapter under the chapter heading.

§ 2689. Provisions applicable where conservatee is an "absentee"

Comment. Section 2689 continues Section 2689 of the repealed Probate Code without change. This section requires additional allegations in the petition and additional notice and dispenses with the interview and report by the court investigator where the conservatee is in missing status as determined under federal law. For general provisions relating to notice of hearing, see Sections 1200-1221, 1460-1469. See also Sections 1260-1265 (proof of giving notice), 2700-2702 (notice to persons who request special notice). For background on the provisions of this chapter, see the Comment to this chapter under the chapter heading.

CHAPTER 10. REQUESTS FOR SPECIAL NOTICE

§ 2700. Request for special notice

Comment. Section 2700 supersedes Section 2700 of the repealed Probate Code. Rather than listing the various petitions for which special notice may be requested, Section 2700 permit a request for special notice of any petition filed in the guardianship or conservatorship proceeding. This revision makes Section 2700 consistent with Section 1250 (decedents' estates).

If a request for special notice is made as provided in this section, notice is required to be given as provided in Section 2702. Subdivision (c) permits the person requesting special notice to request notice of the matters described in subdivision (c), which includes all petitions and

specified additional matters. Subdivision (d) gives the person requesting special notice the option to describe specifically those matters of which special notice is requested if the person does not wish to receive special notice of all matters.

Subdivision (e) makes clear that the request for special notice must be given to the guardian or conservator or the attorney for the guardian or conservator. As to the manner of giving notice, see Sections 1220-1221. As to proof of giving notice, see Section 1260.

Special notice must be given under this chapter even though the provision under which the petition is filed permits ex parte petition. See, e.g., Section 2463 (authorization to commence partition action). However, if the action is taken without court authorization, no notice is required. See Sections 2544-2545 (sales permitted without court authorization).

The ward, if over 14 years of age, or the conservatee may request special notice under Section 2700 and must be given such notice if requested, whether or not the court has dispensed with notice to the ward or conservatee under Section 1460.

For a comparable provision relating to decedents' estates, see Section 1250. For background on the provisions of this part, see the Comment to this part under the part heading.

§ 2701. Modification or withdrawal of request; new request

Comment. Section 2701 continues Section 2701 of the repealed Probate Code without substantive change. For a comparable provision relating to decedents' estates, see Section 1251. For background on the provisions of this part, see the Comment to this part under the part heading.

§ 2702. Petitioner required to give requested special notice

Comment. Section 2702 supersedes Section 2702 of the repealed Probate Code. The section uses language drawn from Section 1252, the comparable provision relating to decedents' estates. For general provisions relating to notice, see Section 1200 et seq. For background on the provisions of this part, see the Comment to this part under the part heading.

CHAPTER 11. APPEALS

§ 2750. Appealable orders

Comment. Section 2750 continues Section 2750 of the repealed Probate Code without substantive change. For a provision governing appeals from orders and judgments under Part 6 (management or disposition of community property where spouse lacks legal capacity),

see Section 3024. See also Section 1962 (automatic appeal of order authorizing consent to sterilization). For a comparable provision relating to decedents' estates, see Section 7240. For background on the provisions of this part, see the Comment to this part under the part heading.

§ 2751. Stay

Comment. Section 2751 continues Section 2751 of the repealed Probate Code without substantive change. Subdivision (c) recognizes the effect of Code of Civil Procedure Section 917.7, which applies to proceedings that affect custody of a minor child, including guardianship proceedings. 9 B. Witkin, California Procedure *Appeal* § 178, at 190 (3d ed. 1985 & Supp. 1989). Section 917.7 provides that, with certain exceptions, an appeal does not stay proceedings in the trial court that affect custody of a minor. See also Section 1965 (order granting authority to consent to sterilization stayed pending appeal). For a comparable provision relating to decedents' estates, see Section 7241. For background on the provisions of this part, see the Comment to this part under the part heading.

§ 2752. Reversal of order appointing guardian or conservator

Comment. Section 2752 continues Section 2752 of the repealed Probate Code without substantive change. Although appeal of an order appointing a guardian or conservator ordinarily stays the order pursuant to Section 2751, there may be an interval between appointment and determination of the appeal during which the guardian or conservator acts. See Section 2751(b). For a comparable provision relating to decedents' estates, see Section 8406. For background on the provisions of this part, see the Comment to this part under the part heading.

CHAPTER 12. TRANSFER OF PERSONAL PROPERTY OUT OF STATE

§ 2800. "Foreign guardian or conservator" defined

Comment. Section 2800 continues Section 2800 of the repealed Probate Code without change. For background on the provisions of this part, see the Comment to this part under the part heading.

§ 2801. Order for transfer of assets out of state

Comment. Section 2801 continues Section 2801 of the repealed Probate Code without substantive change. This section permits transfer of assets to a foreign country as well as to another state, consistent with the trust law. See Sections 17400-17405. See also Section 2750 (order transferring assets of guardianship or conservatorship estate to a fiduciary in another jurisdiction is an appealable order). For a procedure for

removal of assets to another jurisdiction by a nonresident guardian or conservator or similar fiduciary where there is no California guardian or conservator, see Sections 3800-3803. For a comparable provision in trust law, see Section 17401. For background on the provisions of this part, see the Comment to this part under the part heading.

§ 2802. Who may petition for transfer

Comment. Section 2802 continues Section 2802 of the repealed Probate Code without change. For background on the provisions of this part, see the Comment to this part under the part heading.

§ 2803. Contents of petition

Comment. Section 2803 continues Section 2803 of the repealed Probate Code without substantive change. For general provisions relating to petitions and other papers, see Sections 1020-1023. This section is comparable to Section 17402 (transfer of trust assets out of state). The information required to be included in the petition is needed so the court can decide whether the requirements of Section 2806 are satisfied. For background on the provisions of this part, see the Comment to this part under the part heading.

§ 2804. Notice of hearing

Comment. Section 2804 continues Section 2804 of the repealed Probate Code without substantive change. The phrase "other than the petitioner" has been omitted as unnecessary in view of Section 1201. Section 2804 is comparable to Section 17403 (transfer of trust assets out of state). For general provisions relating to notice of hearing, see Sections 1200-1221, 1460-1469. See also Sections 1260-1265 (proof of giving notice), 2700-2702 (notice to persons who request special notice). For background on the provisions of this part, see the Comment to this part under the part heading.

§ 2805. Objections to petition

Comment. Section 2805 continues Section 2805 of the repealed Probate Code without change. For general provisions relating to hearings and orders, see Sections 1040-1050. See also Section 1043 (manner of handling objections). For background on the provisions of this part, see the Comment to this part under the part heading.

§ 2806. Order for transfer

Comment. Section 2806 continues Section 2806 of the repealed Probate Code without substantive change. This section is comparable to Section 17404 (transfer of trust assets out of state). Important elements in determining whether the "transfer will promote the best interests of the ward or conservatee and the estate" are whether the transfer will facilitate

the economical and convenient administration of the estate and whether the guardianship or conservatorship estate will be administered by a capable fiduciary in the other jurisdiction. For general provisions, see Sections 1000-1004 (rules of practice), 1020-1023 (petitions and other papers), 1040-1050 (hearings and orders), 2103 (effect of final order), 2750 (appealable orders). For background on the provisions of this part, see the Comment to this part under the part heading.

§ 2807. Manner of transfer; conditions

Comment. Section 2807 continues Section 2807 of the repealed Probate Code without change. This section is comparable to the first sentence of Section 17405 (transfer of trust assets out of state). See also Section 2111 (order directing transfer). For background on the provisions of this part, see the Comment to this part under the part heading.

§ 2808. Termination of guardianship or conservatorship

Comment. Section 2808 continues Section 2808 of the repealed Probate Code without substantive change. As to termination of the proceeding and discharge of the guardian or conservator when the estate is exhausted, see Section 2626. If there is California real property being administered in the California proceeding, it may be necessary to continue the California proceeding for the purpose of administering such property. W. Johnstone, G. Zillgitt, & S. House, California Conservatorships § 3.61, at 138, § 3.68, at 145 (Cal. Cont. Ed. Bar 2d ed. 1983 & Supp. 1989). For background on the provisions of this part, see the Comment to this part under the part heading.

PART 5. PUBLIC GUARDIAN

Comment. This part supersedes Part 5 (commencing with Section 2900) of Division 4 of the repealed Probate Code. The superseded part was enacted upon recommendation of the California Law Revision Commission. See *Recommendation Relating to Public Guardians and Administrators,* 19 Cal. L. Revision Comm'n Reports 707 (1988). See also *Communication from the California Law Revision Commission Concerning Assembly Bill 2841,* 19 Cal. L. Revision Comm'n Reports 1201, 1228 (1988). For general provisions governing the office of the public guardian, formerly found in Welfare and Institutions Code Sections 8000-8005, 8008, and 8015, see Government Code Sections 27430-27436.

CHAPTER 1. TAKING TEMPORARY POSSESSION OR CONTROL OF PROPERTY

§ 2900. Authority to take possession or control

Comment. Section 2900 continues Section 2900 of the repealed Probate Code without change.

Background on Section 2900 of Repealed Code

Section 2900 was added by 1988 Cal. Stat. ch. 1199 § 72. The section superseded the fifth sentence of former Welfare and Institutions Code Section 8006. It replaced the concept of "referral" to the public guardian with a scheme based on the propriety of public guardian control. It also added misappropriation as grounds for taking possession or control. For background on the provisions of this part, see the Comment to this part under the part heading.

§ 2901. Recording certification in county property records; providing information and property to public guardian

Comment. Section 2901 continues Section 2901 of the repealed Probate Code without substantive change. The reference to the county recorder has been omitted from subdivision (d)(2) as unnecessary since the county recorder's only involvement is to record the written certification of the public guardian in the county real property records. Section 2901 is comparable to Section 7603 (providing information, access, or property to public administrator).

Background on Section 2901 of Repealed Code

Section 2901 was added by 1988 Cal. Stat. ch. 1199 § 72. The section was drawn from Section 7603 of the repealed Probate Code. See the Comment to Section 7603 of the new Probate Code for the source of Section 7603 of the repealed Probate Code. For background on the provisions of this part, see the Comment to this part under the part heading.

§ 2902. Costs and compensation for taking possession or control

Comment. Section 2902 continues Section 2902 of the repealed Probate Code without substantive change. The costs and compensation provided by this section are subject to court approval under Section 2430. Where the public guardian is ultimately appointed guardian or conservator, the costs and compensation provided by this section are part of the public guardian's compensation. See Section 2942 (expenses and compensation of public guardian). For a comparable provision relating to the public administrator, see Section 7604.

Background on Section 2902 of Repealed Code

Section 2902 was added by 1988 Cal. Stat. ch. 1199 § 72. Section 2902 restated former Welfare and Institutions Code Section 8006.5, but eliminated the maximum and minimum fees. For background on the provisions of this part, see the Comment to this part under the part heading.

§ 2903. Transitional provision

Comment. Section 2903 continues Section 2903 of the repealed Probate Code without substantive change. A reference to Chapter 1199 of the Statutes of 1988 has been substituted for "the act that enacted this chapter." Section 2903 is a specific application of portions of the general operative date and transitional provision. See Section 3.

Background on Section 2903 of Repealed Code

Section 2903 was a new provision added by 1988 Cal. Stat. ch. 1199 § 72. For background on the provisions of this part, see the Comment to this part under the part heading.

CHAPTER 2. APPOINTMENT OF PUBLIC GUARDIAN

§ 2920. Application for appointment

Comment. Section 2920 continues Section 2920 of the repealed Probate Code without change. For general provisions, see Sections 1000-1004 (rules of practice), 1020-1023 (petitions and other papers), 1040-1050 (hearings and orders), 2103 (effect of final order). For general provisions relating to notice of hearing, see Sections 1200-1221, 1460-1469. See also Sections 1260-1265 (proof of giving notice).

Section 1920 applies even though a person may be institutionalized in a facility in another county if the person is domiciled in the county of the public guardian. Even though there may be other persons qualified and willing to act, their appointment may not be in the best interest of the ward or conservatee. This could occur, for example, where a neutral party is needed because of family disputes. In such a situation, a public guardian is not liable for failure to take possession or control of property that is beyond the public guardian's ability to possess or control. See Section 2944 (immunity of public guardian).

The court may order appointment of the public guardian only after notice to the public guardian and a determination that the appointment is necessary. The determination of necessity may require the court to ascertain whether there is any other alternative to public guardianship, and whether the public guardianship is simply being sought as a convenience or as a strategic litigation device by the parties involved. Alternative means of resolving the situation, besides appointment of the public guardian, could include such options as use of a private guardian or appointment of a guardian ad litem, in an appropriate case.

Subdivision (b) permits the special notice to the public guardian and hearing under this subdivision to be combined with a general notice and hearing for appointment of a guardian or conservator, in the interest of procedural efficiency.

Background on Section 2920 of Repealed Code

Section 2920 was added by 1988 Cal. Stat. ch. 1199 § 72. The section superseded the first, second, and a portion of the third sentences of former Welfare and Institutions Code Section 8006. For background on the provisions of this part, see the Comment to this part under the part heading.

§ 2921. Persons under jurisdiction of Departments of Mental Health or Developmental Services

Comment. Section 2921 continues Section 2921 of the repealed Probate Code without change.

Background on Section 2921 of Repealed Code

Section 2921 was added by 1988 Cal. Stat. ch. 1199 § 72. The section restated former Welfare and Institutions Code Section 8007 without substantive change. For background on the provisions of this part, see the Comment to this part under the part heading.

§ 2922. Letters, oath, and bond

Comment. Section 2922 continues Section 2922 of the repealed Probate Code without change. Letters issued to "the public guardian" are sufficient to enable a successor public guardian to act without issuance of new letters. Gov't Code § 27433 (termination of authority of public guardian). See also Section 52 ("letters" defined). The public guardian is allowed a share of the cost of the bond as an expense of administration. See Section 2942(c).

Background on Section 2922 of Repealed Code

Section 2922 was added by 1988 Cal. Stat. ch. 1199 § 72. The section restated the third and fourth sentences of former Welfare and Institutions Code Section 8006 with the addition of authority to issue letters to "the public guardian." For background on the provisions of this part, see the Comment to this part under the part heading.

CHAPTER 3. ADMINISTRATION BY PUBLIC GUARDIAN

§ 2940. Deposit or investment of funds

Comment. Section 2940 continues Section 2940 of the repealed Probate Code without change. This section cross-refers to comparable provisions of the public administrator statute.

Background on Section 2940 of Repealed Code

Section 2940 was added by 1988 Cal. Stat. ch. 1199 § 72. The section superseded former Welfare and Institutions Code Section 8009. For background on the provisions of this part, see the Comment to this part under the part heading.

§ 2941. Employment of attorneys

Comment. Section 2941 continues Section 2941 of the repealed Probate Code without change.

Background on Section 2941 of Repealed Code

Section 2941 was added by 1988 Cal. Stat. ch. 1199 § 72. The section restated former Welfare and Institutions Code Section 8010 with the addition of reference to

satisfactory pro bono or contingency fee arrangements. For background on the provisions of this part, see the Comment to this part under the part heading.

§ 2942. Compensation and expenses of public guardian; bond fee

Comment. Section 2942 continues Section 2942 of the repealed Probate Code without change. Subdivision (c) is comparable to Section 7621(d) (public administrator).

Background on Section 2942 of Repealed Code

Section 2942 was added by 1988 Cal. Stat. ch. 1199 § 72. Subdivisions (a) and (b) of Section 2942 restated former Welfare and Institutions Code Section 8013 without substantive change. Subdivision (c) was new. For background on the provisions of this part, see the Comment to this part under the part heading.

§ 2943. Inventory and appraisal

Comment. Section 2943 continues Section 2943 of the repealed Probate Code without change.

Background on Section 2943 of Repealed Code

Section 2943 was added by 1988 Cal. Stat. ch. 1199 § 72. The section superseded former Welfare and Institutions Code Section 8011. For background on the provisions of this part, see the Comment to this part under the part heading.

§ 2944. Immunity of public guardian

Comment. Section 2944 continues Section 2944 of the repealed Probate Code without change. Cf. Section 7601(b) (duty of public administrator).

Background on Section 2944 of Repealed Code

Section 2944 was a new provision added by 1988 Cal. Stat. ch. 1199 § 72. For background on the provisions of this part, see the Comment to this part under the part heading.

PART 6. MANAGEMENT OR DISPOSITION OF COMMUNITY PROPERTY WHERE SPOUSE LACKS LEGAL CAPACITY

Comment. This part supersedes Part 6 (commencing with Section 3000) of Division 4 of the repealed Probate Code. The superseded part was enacted upon recommendation of the California Law Revision Commission. See *Recommendation Relating to Guardianship-Conservatorship Law,* 14 Cal. L. Revision Comm'n Reports 501 (1978). See also *Report of Assembly Committee on Judiciary on Assembly Bills Nos. 261 and 167,* republished in 15 Cal. L. Revision Comm'n Reports 1061, 1089-91 (1980). For the Guardianship-Conservatorship Law as enacted in 1979 (Chapter 726 of the Statutes of 1979) with the revisions made by Chapters 89 and 246 of the Statutes of 1980, see *Guardianship-Conservatorship Law,* 15 Cal. L. Revision Comm'n Reports 451 (1980).

CHAPTER 1. DEFINITIONS AND GENERAL PROVISIONS

Article 1. Definitions

§ 3000. Application of definitions

Comment. Section 3000 continues Section 3000 of the repealed Probate Code without change. For background on the provisions of this part, see the Comment to this part under the part heading.

§ 3002. "Community property"

Comment. Section 3002 continues Section 3002 of the repealed Probate Code without substantive change. The phrase "primary management and control" has been substituted for "sole management and control" to conform to the language used in Civil Code Section 5125(d).

Community property includes business property notwithstanding the fact that a spouse now lacking legal capacity formerly had primary management and control of the business. See Civil Code § 5125(d). The property may be community property notwithstanding that title is held in some other form. W. Johnstone, G. Zillgitt, & S. House, California Conservatorships § 11.11, at 653 (Cal. Cont. Ed. Bar 2d ed. 1983); see also 7 B. Witkin, Summary of California Law *Community Property* §§ 49-50, at 5140-42 (8th ed. 1974). Even though community property in a revocable trust described in Section 5110.150 of the Civil Code remains community property, it is excluded from the provisions of this part because the trust property is administered pursuant to the trust.

For background on the provisions of this part, see the Comment to this part under the part heading.

§ 3004. "Conservator"

Comment. Section 3004 continues Section 3004 of the repealed Probate Code without change. Conservator of the estate includes a person appointed as conservator of the person and estate. For background on the provisions of this part, see the Comment to this part under the part heading.

§ 3006. "Conservatorship estate"

Comment. Section 3006 continues Section 3006 of the repealed Probate Code without change. For background on the provisions of this part, see the Comment to this part under the part heading.

§ 3008. "Conservatorship proceeding"

Comment. Section 3008 continues Section 3008 of the repealed Probate Code without change. For background on the provisions of this part, see the Comment to this part under the part heading.

§ 3012. "Legal capacity" with respect to community property

Comment. Section 3012 continues Section 3012 of the repealed Probate Code without change. This section governs the construction of this part. See Section 3000. The legal capacity of a conservatee for other purposes is governed by Sections 1870-1910 (legal capacity of conservatee).

Subdivision (a) is based on the presumption that a spouse has legal capacity, and its effect is to impose the burden of proof on a person seeking to show lack of legal capacity.

Subdivision (b)(3) implements the policy that a conservator of the estate acts for the conservatee under this part. See Section 3004 (defining "conservator"). This rule is consistent with the duty of the conservator to manage and control the conservatorship estate and provides needed certainty for property transactions.

Subdivision (b)(1) recognizes that a spouse not having a conservator may lack legal capacity to manage, control, and dispose of community property and adopts the rule that such a spouse lacks such legal capacity if the spouse is substantially unable to manage or control the community property. The standard of substantial inability is consistent with the grounds for appointment of a conservator. See Section 1801(b) (person substantially unable to manage his or her own financial resources).

Subdivision (b)(2) recognizes that a spouse not having a conservator may lack legal capacity to join in or consent to a particular transaction under principles of law otherwise applicable. See, e.g., Civil Code §§ 38, 39. Whether the spouse lacks legal capacity for the particular purpose depends on the act involved and the standards otherwise applicable to determine capacity for that act.

Subdivision (c) is comparable to Section 1871. See the Comment to Section 1871.

For background on the provisions of this part, see the Comment to this part under the part heading.

Article 2. General Provisions

§ 3020. Rights of spouses in community property preserved

Comment. Section 3020 continues Section 3020 of the repealed Probate Code without change. For background on the provisions of this part, see the Comment to this part under the part heading.

§ 3023. Determination of character of property

Comment. Section 3023 continues Section 3023 of the repealed Probate Code with the addition of subdivision (d) which is comparable to subdivision (b) of Section 2525 (conveyance or transfer of property claimed to belong to ward or conservatee or other person). Subdivision (c) has been modified to reflect the addition of subdivision (d).

Section 3023 applies to all proceedings under this division where an issue is raised whether property is community or separate property. The section is consistent with the holding in Estate of Baglione, 65 Cal. 2d 192, 417 P.2d 683, 53 Cal. Rptr. 139 (1966) (probate court has jurisdiction in decedent's estate proceeding to determine interest of each spouse in community property). For background on the provisions of this part, see the Comment to this part under the part heading.

§ 3024. Appeals

Comment. Section 3024 continues Section 3024 of the repealed Probate Code without change. This section makes clear that rules governing appeals in a civil action govern appeals from orders and judgments under this part. For background on this section, see *Recommendation Relating to Revision of the Guardianship-Conservatorship Law,* 15 Cal. L. Revision Comm'n Reports 1463, 1472-73, 1486 (1980). For background on the provisions of this part, see the Comment to this part under the part heading.

CHAPTER 2. MANAGEMENT, CONTROL, AND DISPOSITION

Article 1. Management, Control, and Disposition Generally

§ 3051. Community property

Comment. Section 3051 continues Section 3051 of the repealed Probate Code without change. Subdivisions (a) and (b) make clear that the lack of legal capacity of one spouse does not affect the right of the spouse having legal capacity to manage and control community property

or to dispose of the property, whether or not the other spouse has a conservator. As to when a spouse lacks legal capacity, see Section 3012. The authority given the spouse having legal capacity is limited by Section 3071 which applies in any case where joinder or consent would be required for a transaction if both spouses had legal capacity. The spouse having legal capacity has the duty of good faith in managing and controlling the property. See Section 3057; Civil Code § 5125(e).

Community property is defined in Section 3002 to include both real and personal property, and to include a community property business. Such a business, even if formerly managed by a spouse now lacking legal capacity, is included in the management, control, and disposition provisions of this section.

If both spouses have conservators, the approval of only one of the courts in which the conservatorship proceedings are pending is required under subdivision (e). However, if the other conservatorship proceeding is pending in another court, that court may order that the community property not be included in that conservatorship estate (Section 3054) and, if the court so orders, subdivision (d) of Section 3051 applies. Similarly, if a spouse having legal capacity consents as provided in subdivision (c) to inclusion of property in the conservatorship estate of the other spouse, the court in which the conservatorship proceeding is pending may nevertheless order that the property not be included in the conservatorship estate. See Section 3054.

Section 3051 applies only where one spouse has legal capacity or both spouses have conservators. The section does not cover the situation where both spouses lack legal capacity and neither or only one has a conservator. In these situations, since Section 3051 applies only if both spouses lacking legal capacity have conservators, a conservator or conservators will need to be appointed in order to make the section applicable.

For background on the provisions of this part, see the Comment to this part under the part heading.

§ 3054. Authority of court

Comment. Section 3054 continues Section 3054 of the repealed Probate Code without change. This section states the powers of the court as to receipt and handling of additional assets under this chapter, and recognizes the right to revoke consent to administration in one of the conservatorship estates. For general provisions, see Sections 1000-1004 (rules of practice), 1020-1023 (petitions and other papers), 1040-1050 (hearings and orders). For general provisions relating to notice of

hearing, see Sections 1200-1221. See also Sections 1260-1265 (proof of giving notice).

For background on the provisions of this part, see the Comment to this part under the part heading.

§ 3055. Effect on consent of death or subsequent lack of legal capacity

Comment. Section 3055 continues Section 3055 of the repealed Probate Code without change. If a conservator is appointed for a spouse that has given consent to inclusion of community property in the conservatorship estate of the other spouse, the appointment terminates the consent. But the two conservators may, when authorized by order of court, consent that the property continue to be included in the same conservatorship estate, or they may work out some other arrangement for administration of the property as part of a plan for administration of the community property of the two spouses. See Section 3051(d)-(e). As to revocation of consent or termination of inclusion of property in a conservatorship estate, see Section 3054. For background on the provisions of this part, see the Comment to this part under the part heading.

§ 3056. Manner of management, control, and disposition of property as part of conservatorship estate

Comment. Section 3056 continues Section 3056 of the repealed Probate Code without change. It makes applicable to the property included in a conservatorship estate under this article the provisions of Part 4 (commencing with Section 2100) and any other applicable provisions. The introductory clause of Section 3056 recognizes the limitations on disposition imposed by Section 3071 (substitute for joinder or consent requirement) and by other provisions such as Sections 3020 (community property interests not affected), 3054 (authority of court), and 3055 (effect on consent of death or subsequent lack of legal capacity). See also Section 3057 (protection of rights of spouse who lacks legal capacity). For background on the provisions of this part, see the Comment to this part under the part heading.

§ 3057. Protection of rights of spouse who lacks legal capacity

Comment. Section 3057 continues Section 3057 of the repealed Probate Code without change. As to the duty or good faith in managing and controlling community property, see Civil Code Section 5125(e). For background on the provisions of this part, see the Comment to this part under the part heading.

Article 2. Substitute for Joinder or Consent Requirements

§ 3070. Article provides substitute for joinder or consent requirements of other statutes

Comment. Section 3070 continues Section 3070 of the repealed Probate Code without change. This section makes clear that a transaction that satisfies the provisions of this article is deemed to satisfy the joinder or consent requirement of the Civil Code sections or other statutory provision referred to in Section 3071. For background on the provisions of this part, see the Comment to this part under the part heading.

§ 3071. Substitute for joinder or consent

Comment. Section 3071 continues Section 3071 of the repealed Probate Code without change. Civil Code Section 5127 requires joint action by spouses with regard to disposition of community real property (lease for a longer period than one year or sale, conveyance, or encumbrance). The reference to Civil Code Section 5125, which requires joint action of spouses for certain community personal property transactions, applies to such matters as gifts of personal property and disposition of furniture and furnishings where consent is required by Civil Code Section 5125(b) and (c). For the manner in which joinder in or consent to the transaction under Section 3071 is to be given, see Section 3073. For background on the provisions of this part, see the Comment to this part under the part heading.

A spouse having a conservator of the estate is deemed to lack legal capacity for the purposes of this section. Section 3012(b)(3). However, a third person acting in good faith and for a valuable consideration is protected unless notice of establishment of the conservatorship is recorded. Section 3074.

If a spouse lacks legal capacity and does not have a conservator, either:

(1) A conservator must be appointed for that spouse so the conservator can join in or consent to the transaction in order to satisfy subdivision (b) or (c); or

(2) A proceeding may be brought under Chapter 3 (commencing with Section 3100) to authorize the transaction, thereby avoiding the need to appoint a conservator, if the other spouse has legal capacity for the transaction or has a conservator.

§ 3072. Court order authorizing joinder or consent by conservator

Comment. Section 3072 continues Section 3072 of the repealed Probate Code without change. Subdivision (b) provides an exception to the requirement of a court order in certain cases where consent for a transaction involving community personal property is required. See Civil Code § 5125(c); Prob. Code § 2545. Subdivision (b) does not,

however, dispense with the need for court authorization for the conservator to join in or consent to a gift of community personal property or a disposition of community personal property without valuable consideration under subdivision (b) of Civil Code Section 5125. See also Sections 3122(d)(4), 3144(b). For background on the provisions of this part, see the Comment to this part under the part heading.

§ 3073. Manner of joinder or consent

Comment. Section 3073 continues Section 3073 of the repealed Probate Code without change. This section requires that the joinder or consent satisfy the requirements of the statute applicable to the transaction. Civil Code Section 5125 requires written consent of a spouse for certain dispositions of community personal property. Civil Code Section 5127 requires that "both spouses either personally or by duly authorized agent, must join in executing any instrument by which such community real property or any interest therein is leased for a longer period than one year, or is sold, conveyed, or encumbered." Under Section 3073, a spouse having legal capacity must satisfy the requirements of the statute that applies to the transaction just as if both spouses had legal capacity. If one or both spouses has a conservator, the conservator or conservators must satisfy the requirements of the statute that applies to the transaction and, in addition, subdivision (b) of Section 3073 requires that the joinder or consent refer to the court order (if one is required by Section 3072) authorizing the conservator to join in or consent to the transaction. As to requirements in connection with a conveyance of real property by a conservator and the effect of the conveyance, see Section 2111. For background on the provisions of this part, see the Comment to this part under the part heading.

§ 3074. Third persons acting in good faith

Comment. Section 3074 continues Section 3074 of the repealed Probate Code without change, except that the section is revised to extend to any person who enters into a transaction in good faith and for a valuable consideration, not only purchasers or encumbrancers. This section protects innocent third parties who do not have knowledge of the existence of the conservatorship. The section is comparable to Section 1875. See the Comment to Section 1875. Nothing in Section 3074 validates a transaction that is invalid under Civil Code Section 38, nor prevents rescission of a transaction under Civil Code Section 39 if the conservatee would lack sufficient capacity to join in or consent to the transaction absent the conservatorship. For background on the provisions of this part, see the Comment to this part under the part heading.

Article 3. Enforcement of Support of Spouse Who Has Conservator

Comment. This article supersedes Article 3 (commencing with Section 3080) of Chapter 2 of Part 6 of Division 4 of the repealed Probate Code. The superseded article was enacted upon recommendation of the California Law Revision Commission. See *Recommendation Relating to Revision of the Guardianship-Conservatorship Law,* 15 Cal. L. Revision Comm'n Reports 1463, 1469-73, 1486-94 (1980).

§ 3080. Petition

Comment. Section 3080 continues Section 3080 of the repealed Probate Code without change. Sections 3080-3092 provide a procedure for obtaining an order requiring a spouse managing and controlling community property to apply the property to the support of the spouse having a conservator. A public officer or employee or a public entity may file a petition under this article. See Section 1424 (defining "interested person"). The procedure provided by this article is supplemental to other procedures to enforce the duty of support. Section 3092.

Where an issue is raised in a proceeding under this article whether property is community property or the separate property of either spouse, the court may hear and determine the issue in the proceeding. Section 3087.

For general provisions, see Sections 1000-1004 (rules of practice), 1020-1023 (petitions and other papers), 1040-1050 (hearings and orders). For background on the provisions of this article, see the Comment to this article under the article heading.

§ 3081. Notice of hearing

Comment. Section 3081 continues Section 3081 of the repealed Probate Code without change. This section is comparable to Section 2521 (property claimed to belong to ward or conservatee). For general provisions relating to notice of hearing, see Sections 1200-1221. See also Sections 1260-1265 (proof of giving notice). For background on the provisions of this article, see the Comment to this article under the article heading.

§ 3082. Examination of spouse in control of property

Comment. Section 3082 continues Section 3082 of the repealed Probate Code without change. This section is comparable to Section 2616 (examination concerning assets of guardianship or conservatorship estate). See also Sections 1240-1242 (citations). For background on the provisions of this article, see the Comment to this article under the article heading.

§ 3083. Order

Comment. Section 3083 continues Section 3083 of the repealed Probate Code without substantive change. This section is the same in substance as Civil Code Section 4357 (Family Law Act). The section permits the court to make a temporary order for support if necessary pending determination of the petition. For general provisions, see Sections 1000-1004 (rules of practice), 1040-1050 (hearings and orders). For background on the provisions of this article, see the Comment to this article under the article heading.

§ 3084. Income and expense declaration and property declaration

Comment. Section 3084 continues Section 3084 of the repealed Probate Code without change. The time for serving and filing the financial declarations may be prescribed by Judicial Council rule. Section 3091. For background on the provisions of this article, see the Comment to this article under the article heading.

§ 3085. Ex parte orders pending determination

Comment. Section 3085 continues Section 3085 of the repealed Probate Code without change. This section is the same in substance as subdivision (a)(1) of Civil Code Section 4359 (Family Law Act). For background on the provisions of this article, see the Comment to this article under the article heading.

§ 3086. Continuance

Comment. Section 3086 continues Section 3086 of the repealed Probate Code without change. This section is the same in substance as Section 2522 (property claimed to belong to ward or conservatee). For background on the provisions of this article, see the Comment to this article under the article heading.

§ 3087. Determination of character of property

Comment. Section 3087 continues Section 3087 of the repealed Probate Code without change. This section makes clear that the court has jurisdiction to determine whether property is community or separate in a proceeding under this article. The section is consistent with Section 3023 which applies generally to proceedings under this division; but, unlike Section 3023, Section 3087 does not deprive the court of jurisdiction where an objection based on improper venue is raised. Also unlike Section 3023, Section 3087 does not contain an express provision requiring the court to abate a proceeding under this article when another action is pending. However, the general rules of civil procedure with respect to abatement when another action is pending apply to proceedings under this article. See Section 1000. See generally 5 B. Witkin, California Procedure *Pleading* §§ 1060-71, at 473-84 (3d ed. 1985). For

background on the provisions of this article, see the Comment to this article under the article heading.

§ 3088. Order for support and maintenance of conservatee

Comment. Section 3088 continues Section 3088 of the repealed Probate Code without substantive change. Subdivision (a) is comparable to subdivision (a) of Section 2420 (support, maintenance, and education of ward or conservatee). Subdivision (b) is comparable to Civil Code Section 246 (Uniform Civil Liability for Support Act). Subdivision (c) is comparable to the first sentence of the last paragraph of subdivision (a) of Civil Code Section 4801 (Family Law Act).

Subdivision (d) provides for periodic payments, which are to be made to the conservator of the person or other person designated in the order (such as the State Department of Mental Health or the State Department of Developmental Services). The second sentence of subdivision (d) is comparable to the second sentence of the last paragraph of subdivision (a) of Civil Code Section 4801.

Subdivision (e) is comparable to Civil Code Sections 4701 and 4801.6. The first two sentences of subdivision (f) are comparable to Civil Code Section 247 (Uniform Civil Liability of Support Act) and the last paragraph of subdivision (a) of Civil Code Section 4801.

For general provisions, see Sections 1000-1004 (rules of practice), 1040-1050 (hearings and orders). For general provisions relating to notice of hearing, see Sections 1200-1221. See also Sections 1260-1265 (proof of giving notice). For background on the provisions of this article, see the Comment to this article under the article heading.

§ 3089. Division of community property

Comment. Section 3089 continues Section 3089 of the repealed Probate Code without change. This section gives the court in which the conservatorship proceeding is pending authority to make an equal division of community and quasi-community property as in a marriage dissolution proceeding. The court has discretion whether to make such a division. The spouse having management or control of community property may consent to all or part of such property being administered in the conservatorship estate. Section 3051(c). Such consent may avoid the need for a division under Section 3089.

The authority to divide community property may not be exercised unless the competent spouse refuses to comply with an order made under this article or in a separate action for support of the conservatee spouse.

The authority granted by Section 3089 is useful, for example, where property awarded to the conservatee spouse is sufficient to provide for support and maintenance of that spouse. Division in such a case will

avoid the need for further proceedings to enforce the support obligation from community property. Division of community property does not, however, necessarily eliminate the support obligation of the competent spouse. If community property is acquired by the competent spouse after division of the property, that community property may be ordered applied to support the conservatee under this article or by other procedures. However, a separate action is necessary to obtain future support from separate property of the competent spouse. See Section 3092 and the Comment thereto.

For general provisions, see Sections 1000-1004 (rules of practice), 1020-1023 (petitions and other papers), 1040-1050 (hearings and orders). For general provisions relating to notice of hearing, see Sections 1200-1221. See also Sections 1260-1265 (proof of giving notice). For background on the provisions of this article, see the Comment to this article under the article heading.

§ 3090. Enforcement of orders

Comment. Section 3090 continues Section 3090 of the repealed Probate Code without change. This section is the same in substance as Section 4380 of the Civil Code (Family Law Act). The section adds to the methods of enforcement (such as wage assignment under Section 3088 or division of community property under Section 3089) that are specifically provided for elsewhere in this article. For background on the provisions of this article, see the Comment to this article under the article heading.

§ 3091. Judicial Council rules

Comment. 3091 continues Section 3091 of the repealed Probate Code without change. This section is the same in substance as Civil Code Section 4001 (Family Law Act). For background on the provisions of this article, see the Comment to this article under the article heading.

§ 3092. Other procedures not limited

Comment. Section 3092 continues Section 3092 of the repealed Probate Code without change. This section makes clear that this article may be used as an alternative to other procedures for enforcement of a support obligation, and does not preclude enforcement of a support obligation by a separate action for support against the spouse managing or controlling the community property. If a separate action is pending at the time a proceeding is brought under this article, the general rules of civil procedure relating to abatement apply. See the Comment to Section 3087. The procedure provided in this article cannot be used if support is sought from separate property of the spouse managing and controlling the community property or from some other person; a separate action is

necessary. As to enforcement of support generally, see Civil Code §§ 241-254 (Uniform Civil Liability for Support Act). See also Code Civ. Proc. §§ 1650-1699.4 (Revised Uniform Reciprocal Enforcement of Support Act). For background on the provisions of this article, see the Comment to this article under the article heading.

CHAPTER 3. PROCEEDING FOR PARTICULAR TRANSACTION

Article 1. General Provisions

§ 3100. "Transaction" defined

Comment. Section 3100 continues Section 3100 of the repealed Probate Code without change. For background on the provisions of this part, see the Comment to this part under the part heading.

§ 3101. Nature of proceeding under this chapter

Comment. Section 3101 continues Section 3101 of the repealed Probate Code without change. For the purposes of this chapter, a spouse lacks legal capacity for a transaction if a conservator of the estate has been appointed for the spouse. See Sections 3004 (defining "conservator"), 3012(b)(3) (legal capacity). This is consistent with Section 3071 which requires joinder or consent of the conservator rather than the spouse to a transaction requiring joinder or consent of both spouses. For background on the provisions of this part, see the Comment to this part under the part heading.

Section 3012 (legal capacity) also covers the case where, applying the principles of law otherwise applicable, a spouse not having a conservator of the estate lacks capacity for the particular proposed transaction that is the subject of the proceeding. See generally Civil Code §§ 38, 39.

The proposed transaction must be one that involves community real or personal property, tangible or intangible, or an interest therein or a lien or encumbrance thereon, including, but not limited to, those transactions with respect thereto as are listed in Section 3102. See Section 3100 (defining "transaction"). See also Section 3002 (defining "community property"). Court authorization may be sought under this chapter in order to satisfy the requirements of Section 3071 (substitute for joinder or consent), or may be sought so that a transaction not requiring joinder or consent of both spouses cannot later be rescinded by someone acting on behalf of a spouse who lacks legal capacity for the transaction.

Approval of a proposed transaction in a proceeding under this chapter avoids the need to establish a conservatorship for a spouse lacking legal capacity merely to accomplish that transaction. Thus, where one spouse has a conservator of the estate and the other spouse lacks legal capacity

for the transaction but does not have a conservator, a proceeding may be brought under this chapter to obtain authorization of the transaction, and the need to establish a conservatorship for the other spouse is avoided. See Section 3071. However, in order to bring a proceeding under subdivision (a), there must be at least one spouse having legal capacity for the transaction or there must be a conservator of the estate for one of the spouses. See also Section 3111 and the Comment thereto. Where both spouses have conservators of the estate, the procedure provided in this chapter is available to obtain court authorization as an alternative to the other methods provided in Section 3072.

Subdivision (b) covers the case where a spouse does not have a conservator and it is uncertain whether the spouse has legal capacity for the proposed transaction. The court is requested to determine that the spouse has legal capacity for the transaction. If the court determines the spouse has legal capacity for the transaction and if the other spouse has legal capacity for the transaction, the two spouses can proceed with the transaction without further court authorization as any other married persons having legal capacity. If the other spouse does not have legal capacity for the transaction, the transaction may be authorized under this chapter only if the spouse found to have legal capacity for the transaction is willing to join in or consent to the proposed transaction. See Section 3144.

Subdivision (c) enables a proceeding to be brought under this chapter, for example, to have one spouse declared to have legal capacity for a proposed transaction, to have the other spouse determined to lack legal capacity for the proposed transaction, and to authorize the proposed transaction.

Under subdivision (d), the court has broader authority than under Section 3023 (determination of character of property) because subdivision (d) has no limitations comparable to subdivisions (b) and (c) of Section 3023.

Subdivision (e) makes clear that the procedure provided in this part is not exclusive of other remedies.

§ 3102. Transactions that may be subject of the proceeding

Comment. Section 3102 continues Section 3102 of the repealed Probate Code without substantive change. Subdivisions (c), (d), and (e) are comparable to Section 2556 (power of conservator to dedicate or convey real property or easement).

Subdivision (f) is derived from Section 2580 (substituted judgment). A transaction proposed under subdivision (f) must satisfy the requirements of Sections 2582 and 2583. See Section 3144(b).

For background on the provisions of this part, see the Comment to this part under the part heading.

Article 2. Commencement of Proceeding

§ 3110. Jurisdiction and venue

Comment. Section 3110 continues Section 3110 of the repealed Probate Code without substantive change. Paragraph (3) of subdivision (c) is comparable to a portion of Sections 2201 and 2202 (venue for conservatorship proceeding).

Subdivision (d) requires the proceeding to be commenced in the county where the conservatorship proceedings of both spouses are pending if both spouses have conservators. Since that court will be settling the accounts of the two conservators and otherwise acting on petitions in connection with the conservatorship estates, it is the appropriate court to commence a proceeding under this chapter, even where the proceeding involves real property located in another county. For background on the provisions of this part, see the Comment to this part under the part heading.

§ 3111. Who may file petition

Comment. Section 3111 continues Section 3111 of the repealed Probate Code without change. Subdivision (b) ensures that, if the proposed transaction is approved, the petitioner will have legal capacity to carry out the court's orders concerning the transaction. Subdivision (b) does not apply where the only relief requested in the petition is a declaration that one or both spouses has legal capacity for a proposed transaction. For general provisions, see Sections 1020-1023 (petitions and other papers). For general provisions relating to notice of hearing, see Sections 1200-1221. See also Sections 1260-1265 (proof of giving notice). For background on the provisions of this part, see the Comment to this part under the part heading.

§ 3112. Representation of petitioning spouse

Comment. Section 3112 continues Section 3112 of the repealed Probate Code without change. Subdivision (a) supplements subdivisions (a) and (b) of Section 3101 and paragraph (1) of subdivision (a) of Section 3111 (who may petition). Subdivision (b) is consistent with Section 2462 and Code of Civil Procedure Section 372. As to appointment of a guardian ad litem, see Section 1003. For background on the provisions of this part, see the Comment to this part under the part heading.

§ 3113. Appointment of conservator not required

Comment. Section 3113 continues Section 3113 of the repealed Probate Code without change. For background on the provisions of this part, see the Comment to this part under the part heading.

Article 3. Petition

§ 3120. Combining several transactions; permissible allegations

Comment. Section 3120 continues Section 3120 of the repealed Probate Code without change. This section recognizes that a petition under this chapter may request the court to authorize a proposed transaction, to make a declaration of legal capacity for the proposed transaction, or both. See Section 3101. See also Sections 1020-1023 (petitions and other papers). For background on the provisions of this part, see the Comment to this part under the part heading.

§ 3121. Required contents of petition

Comment. Section 3121 continues Section 3121 of the repealed Probate Code without change. The relief requested under subdivision (j) may be in the alternative. Sections 3101, 3120. Section 3121 states the required contents of a petition under this chapter regardless of the relief sought. For special allegations that depend upon the relief sought, see Sections 3122-3123. See also Sections 1020-1023 (petitions and other papers). For background on the provisions of this part, see the Comment to this part under the part heading.

§ 3122. Petition for court order authorizing transaction

Comment. Section 3122 continues Section 3122 of the repealed Probate Code without change. Subdivisions (a) and (b) include the situation where each of the spouses has a conservator.

Subdivision (c) conforms to Section 3144(a)(4). It implements the policy of Section 3144 that the court may not authorize a transaction without the consent of a spouse alleged to lack legal capacity unless the spouse has a conservator or is a person for whom a conservator could be appointed.

Subdivision (d)(4) conforms to subdivision (f) of Section 3102. See also Section 3144(b).

For background on the provisions of this part, see the Comment to this part under the part heading.

§ 3123. Petition for court order declaring legal capacity for transaction

Comment. Section 3123 continues Section 3123 of the repealed Probate Code without change. This section implements the policy of Section 3101 to permit a proceeding for a judicial declaration of legal

capacity for a transaction. For background on the provisions of this part, see the Comment to this part under the part heading.

Article 4. Citation and Notice of Hearing

§ 3130. Citation to nonpetitioning spouse alleged to lack legal capacity; notice to conservator in lieu of citation

Comment. Section 3130 continues Section 3130 of the repealed Probate Code without change. See also Sections 1240-1242 (citations). For general provisions relating to notice of hearing, see Sections 1200-1221. See also Sections 1260-1265 (proof of giving notice). For background on the provisions of this part, see the Comment to this part under the part heading.

§ 3131. Notice to nonpetitioning spouse having legal capacity and relatives

Comment. Section 3131 continues Section 3131 of the repealed Probate Code without change, except that subdivision (c) is revised to delete the requirement that a copy of the petition be mailed with the notice of the hearing to relatives of the spouse alleged to lack legal capacity. This change is made to afford greater privacy to the spouses.

Subdivisions (a) and (b) take into account that the nonpetitioning spouse may have legal capacity, making unnecessary the issuance and service of a citation. See also Section 1822 (notice of hearing on appointment of conservator). For general provisions relating to notice of hearing, see Sections 1200-1221. See also Sections 1260-1265 (proof of giving notice). For background on the provisions of this part, see the Comment to this part under the part heading.

Article 5. Hearing and Order

§ 3140. Representation of spouse alleged to lack legal capacity; appointment of legal counsel

Comment. Section 3140 continues Section 3140 of the repealed Probate Code without change. Subdivision (c) ensures that counsel will be appointed if requested by a spouse unable to retain legal counsel. Section 1472 relates to compensation for counsel appointed under subdivision (c). See also Code Civ. Proc. § 372. As to appointment of a guardian ad litem, see Section 1003. For background on the provisions of this part, see the Comment to this part under the part heading.

§ 3141. Presence of spouse at hearing

Comment. Section 3141 continues Section 3141 of the repealed Probate Code without change. Subdivisions (b) and (c) are comparable to subdivisions (b) and (c) of Section 1825 (attendance of proposed conservatee).

§ 3142. Information to be given to spouse by court

Comment. Section 3142 continues Section 3142 of the repealed Probate Code without change. This section is comparable to Sections 1823 and 1828 (information to proposed conservatee). For background on the provisions of this part, see the Comment to this part under the part heading.

§ 3143. Order declaring legal capacity

Comment. Section 3143 continues Section 3143 of the repealed Probate Code without change. This section implements the policy of Section 3101 to permit a proceeding under this chapter for a declaration of legal capacity for a transaction. For general provisions relating to hearings and orders, see Sections 1040-1050. For background on the provisions of this part, see the Comment to this part under the part heading.

§ 3144. Court determinations before authorizing transaction; order authorizing transaction

Comment. Section 3144 continues Section 3144 of the repealed Probate Code without change. For general provisions relating to hearings and orders, see Sections 1040-1050. For background on the provisions of this part, see the Comment to this part under the part heading.

§ 3145. Effect of determination of lack of legal capacity

Comment. Section 3145 continues Section 3145 of the repealed Probate Code without change. This section makes clear that a determination of lack of legal capacity under this chapter is limited in scope. See also Section 3012 (legal capacity). For background on the provisions of this part, see the Comment to this part under the part heading.

Article 6. Consummation of Transaction

§ 3150. Bond

Comment. Section 3150 continues Section 3150 of the repealed Probate Code without substantive change. For background on the provisions of this part, see the Comment to this part under the part heading.

§ 3151. Execution, delivery, and recording of documents; credit sales

Comment. Section 3151 continues Section 3151 of the repealed Probate Code without substantive change. For background on the provisions of this part, see the Comment to this part under the part heading.

§ 3152. Effect of action taken pursuant to court order

Comment. Section 3152 continues Section 3152 of the repealed Probate Code without change. For background on the provisions of this part, see the Comment to this part under the part heading.

§ 3153. Liability of conservator

Comment. Section 3153 continues Section 3153 of the repealed Probate Code without change. For background on the provisions of this part, see the Comment to this part under the part heading.

§ 3154. Further proceedings if transaction not consummated

Comment. Section 3154 continues Section 3154 of the repealed Probate Code without change. For general provisions relating to notice of hearing, see Sections 1200-1221. See also Sections 1260-1265 (proof of giving notice). For background on the provisions of this part, see the Comment to this part under the part heading.

PART 7. AUTHORIZATION OF MEDICAL TREATMENT FOR ADULT WITHOUT CONSERVATOR

Comment. This part supersedes Part 7 (commencing with Section 3200) of Division 4 of the repealed Probate Code. The superseded part was enacted upon recommendation of the California Law Revision Commission. See *Recommendation Relating to Guardianship-Conservatorship Law,* 14 Cal. L. Revision Comm'n Reports 501 (1978). See also *Report of Assembly Committee on Judiciary on Assembly Bills Nos. 261 and 167,* republished in 15 Cal. L. Revision Comm'n Reports 1061, 1091 (1980). For the Guardianship-Conservatorship Law as enacted in 1979 (Chapter 726 of the Statutes of 1979) with the revisions made by Chapters 89 and 246 of the Statutes of 1980, see *Guardianship-Conservatorship Law,* 15 Cal. L. Revision Comm'n Reports 451 (1980).

The provisions of this part afford an alternative to establishing a conservatorship of the person where there is no ongoing need for a conservatorship. The procedural rules of this part provide an expeditious means of obtaining authorization for medical treatment while safeguarding basic rights of the patient: The patient has a right to counsel. Section 3205. The hearing is held after notice to the patient, the patient's attorney, and such other persons as the court orders. Section 3206. The court may determine the issue on medical affidavits alone if the attorney for the petitioner and the attorney for the patient so stipulate. Section 3207. The court may not order medical treatment under this part if the patient has capacity to give informed consent to the treatment but refuses to do so. Section 3208(b).

§ 3200. "Patient" defined

Comment. Section 3200 continues Section 3200 of the repealed Probate Code without change. For background on the provisions of this part, see the Comment to this part under the part heading.

§ 3201. Petition for court authorization for medical treatment

Comment. Section 3201 continues Section 3201 of the repealed Probate Code without change. This section is similar to a portion of subdivision (b) of Section 2357. For background on the provisions of this part, see the Comment to this part under the part heading.

In the ordinary, nonemergency case, medical treatment may be given to a person only with the person's informed consent. See Cobbs v. Grant, 8 Cal. 3d 229, 502 P.2d 1, 104 Cal. Rptr. 505 (1972). If the person is incompetent or is otherwise unable to give informed consent and has no conservator, the physician may be willing to proceed with the consent of the person's nearest relative. See id. at 244, 502 P.2d at 10, 104 Cal. Rptr. at 514. However, if treatment is not available because of a question of the validity of the consent, court intervention may be needed to authorize the treatment and to protect medical personnel and facilities from later legal action based upon asserted lack of consent.

§ 3202. Jurisdiction and venue

Comment. Section 3202 continues Section 3202 of the repealed Probate Code without change. This section provides liberal venue rules for determining the county in which the petition is to be filed. See also the Comment to Section 2201. For background on the provisions of this part, see the Comment to this part under the part heading.

§ 3203. Who may file petition

Comment. Section 3203 continues Section 3203 of the repealed Probate Code without change. This section permits any interested person to file a petition under this part, including a person acting on behalf of the medical facility if the patient is in a medical facility. For background on the provisions of this part, see the Comment to this part under the part heading.

§ 3204. Contents of petition

Comment. Section 3204 continues Section 3204 of the repealed Probate Code without change. This section is comparable to subdivision (c) of Section 2357. See also Sections 1020-1023 (petitions and other papers). For background on the provisions of this part, see the Comment to this part under the part heading.

§ 3205. Appointment of legal counsel

Comment. Section 3205 continues Section 3205 of the repealed Probate Code without change. For background on the provisions of this part, see the Comment to this part under the part heading.

§ 3206. Notice of hearing

Comment. Section 3206 continues Section 3206 of the repealed Probate Code without change. This section is comparable to subdivisions (e) and (f) of Section 2357. For general provisions relating to notice of hearing, see Sections 1200-1221. See also Sections 1260-1265 (proof of giving notice). For background on the provisions of this part, see the Comment to this part under the part heading.

§ 3207. Submission for determination on medical affidavits

Comment. Section 3207 continues Section 3207 of the repealed Probate Code without change. This section is comparable to subdivision (g) of Section 2357. For background on the provisions of this part, see the Comment to this part under the part heading.

§ 3208. Court-authorized medical treatment for person unable to consent to treatment

Comment. Section 3208 continues Section 3208 of the repealed Probate Code without change. Subdivision (a) is comparable to subdivision (h) of Section 2357. The person designated to give consent may be called upon to make decisions on particular matters that arise within the authorized course of medical treatment. Subdivision (b) makes clear that this part applies only to the case where the patient either lacks capacity to give informed consent or is in such condition that the patient is unable to give consent. For background on the provisions of this part, see the Comment to this part under the part heading.

§ 3209. Continuing jurisdiction of court

Comment. Section 3209 continues Section 3209 of the repealed Probate Code without change. This section gives the court continuing jurisdiction to make such further orders as are necessary concerning medical treatment of the patient. If the court determines that the patient has recovered capacity to give informed consent, the order under this part must be revoked. Section 3208(b). The patient can then determine whether to consent or to refuse to consent to continuation of treatment. For background on the provisions of this part, see the Comment to this part under the part heading.

§ 3210. Procedure supplemental and alternative

Comment. Section 3210 continues Section 3210 of the repealed Probate Code without change. Subdivision (a) makes clear that this part

does not limit other methods for obtaining medical consent. See the Comment to Section 3201.

Subdivision (b) makes clear that this part does not require informed consent of the patient in emergency cases where consent cannot reasonably be obtained. Such cases are governed by other law. See generally Cobbs v. Grant, 8 Cal. 3d 229, 502 P.2d 1, 104 Cal. Rptr. 505 (1972).

For background on the provisions of this part, see the Comment to this part under the part heading.

§ 3211. Prohibited treatment

Comment. Section 3211 continues Section 3211 of the repealed Probate Code with the addition of the reference to a power of attorney for health care. This section is comparable to Section 2356 (Guardianship-Conservatorship Law). See the Comment to Section 2356. For background on the provisions of this part, see the Comment to this part under the part heading.

PART 8. OTHER PROTECTIVE PROCEEDINGS

Comment. This part supersedes Part 8 (commencing with Section 3300) of Division 4 of the repealed Probate Code. The superseded part was enacted upon recommendation of the California Law Revision Commission. See *Recommendation Relating to Guardianship-Conservatorship Law,* 14 Cal. L. Revision Comm'n Reports 501 (1978). For the Guardianship-Conservatorship Law as enacted in 1979 with the revisions made by Chapters 89 and 246 of the Statutes of 1980, see *Guardianship-Conservatorship Law,* 15 Cal. L. Revision Comm'n Reports 451 (1980).

CHAPTER 1. GENERAL PROVISIONS

§ 3300. Parent must account to minor

Comment. Section 3300 continues Section 3300 of the repealed Probate Code without change. For background on the provisions of this part, see the Comment to this part under the part heading.

§ 3301. Consent of court for hospital or medical care or enlistment in armed forces

Comment. Section 3301 continues Section 3301 of the repealed Probate Code without substantive change. For background on the provisions of this part, see the Comment to this part under the part heading.

§ 3302. Approval of contract for attorney's fees for minor; fees in absence of contract

Comment. Section 3302 continues Section 3302 of the repealed Probate Code without change. As to a contingent fee contract in a guardianship proceeding, see Section 2644. For background on the provisions of this part, see the Comment to this part under the part heading.

§ 3303. Effect on Uniform Transfers to Minors Act

Comment. Section 3303 continues Section 3303 of the repealed Probate Code without change. Although this part does not limit the California Uniform Transfers to Minors Act, some provisions of this part supplement that act. See Sections 3412(b), 3413(b), 3602(c)(2), 3611(e). For background on this section, see *Recommendation Relating to Uniform Transfers to Minors Act,* 17 Cal. L. Revision Comm'n Reports 601 (1984). For background on the provisions of this part, see the Comment to this part under the part heading.

CHAPTER 2. MONEY OR PROPERTY BELONGING TO MINOR

Article 1. Total Estate Not in Excess of $5,000

§ 3400. "Total estate of the minor" defined

Comment. Section 3400 continues Section 3400 of the repealed Probate Code without change. For background on the provisions of this part, see the Comment to this part under the part heading.

§ 3401. Delivery of money or property to parent

Comment. Section 3401 continues Section 3401 of the repealed Probate Code without change. For background on the provisions of this part, see the Comment to this part under the part heading.

Subdivision (a) applies only where the minor has no guardian of the estate. If the minor has a guardian of the estate, the money is paid to the guardian, not to a parent. However, subdivision (b) permits the entire guardianship estate to be paid over to a parent without the need for a court order when the requirements of subdivision (c) are satisfied. Such payment does not avoid the need for termination of the guardianship by the court. See Section 2626.

§ 3402. Effect of written receipt of parent

Comment. Section 3402 continues Section 3402 of the repealed Probate Code without change. For background on the provisions of this part, see the Comment to this part under the part heading.

Article 2. Property in the Form of Money

§ 3410. Application of article; computing "money belonging to the minor"

Comment. Section 3410 continues Section 3410 of the repealed Probate Code without change. For background on the provisions of this part, see the Comment to this part under the part heading.

§ 3411. Filing of petition

Comment. Section 3411 continues Section 3411 of the repealed Probate Code without change. For general provisions, see 1020-1023 (petitions and other papers). For background on the provisions of this part, see the Comment to this part under the part heading.

§ 3412. Order of court where guardianship of estate

Comment. Section 3412 continues Section 3412 of the repealed Probate Code with the substitution of language that requires money to be deposited in an insured account in a financial institution in this state for the former language listing various financial institution accounts. This section applies only where the minor has a guardian of the estate. Where the minor has no guardian of the estate, Section 3413 applies. Section 3412 is comparable to Section 3611 (money received pursuant to compromise or judgment). For general provisions relating to hearings and orders, see Sections 1040-1050. For background on the provisions of this part, see the Comment to this part under the part heading.

Where the money of the guardianship estate does not exceed $5,000, the court, in its discretion, may make an order under subdivision (a), (b), (c), or (d). Where the money exceeds $5,000 but does not exceed $20,000, the court has discretion to make an order under subdivision (a), (b), or (c). Where the money exceeds $20,000, the court may make an order only under subdivision (a) or (b).

Where the total estate of the minor (as defined in Section 3400) does not exceed $5,000, money of the guardianship estate may be paid directly to a parent under Section 3401 without obtaining a court order under this article, or a petition may be filed under this article to obtain a court order under Section 3412. This article provides a guardian who is reluctant to turn over the money to a parent to hold in trust for the minor with the alternative of requesting that the court order the amount be deposited or invested under subdivision (a) of Section 3412.

§ 3413. Order of court where no guardianship of estate

Comment. Section 3413 continues Section 3413 of the repealed Probate Code with the substitution of language that requires money to be deposited in an insured account in a financial institution in this state for

the former language listing various financial institution accounts. This section applies only where the minor does not have a guardian of the estate. Where the minor has a guardian of the estate, Section 3412 applies. Section 3413 is similar to Section 3412. See the Comment to Section 3412. For background on the provisions of this part, see the Comment to this part under the part heading.

CHAPTER 3. COMPROMISE BY PARENT OF MINOR'S DISPUTED CLAIM

§ 3500. Parent's right to compromise minor's claim

Comment. Section 3500 continues Section 3500 of the repealed Probate Code with the substitution of language that requires money to be deposited in an insured account in a financial institution in this state for the former language listing various financial institution accounts. The provision of Section 3500 which permits approval by the superior court in any county in which suit could be brought on the claim or matter is consistent with Section 2505 (compromise by guardian or conservator). For background on the provisions of this part, see the Comment to this part under the part heading.

Where the minor has a guardian of the estate, the guardian (rather than the parent) has authority to compromise the claim. See Sections 2500-2507. If the claim is the subject of pending litigation, the minor must appear in the action either by a guardian of the estate or by a guardian ad litem, and in such case Section 372 of the Code of Civil Procedure provides for compromise of the claim.

CHAPTER 4. MONEY OR PROPERTY PAID OR DELIVERED PURSUANT TO COMPROMISE OR JUDGMENT FOR MINOR OR INCOMPETENT PERSON

Article 1. General Provisions

§ 3600. Application of article

Comment. Section 3600 continues Section 3600 of the repealed Probate Code without change. The reference in this section to "incompetent person" includes "a person for whom a conservator may be appointed." See Section 3603. For background on the provisions of this part, see the Comment to this part under the part heading.

§ 3601. Order directing payment of expenses, costs, and fees

Comment. Section 3601 continues Section 3601 of the repealed Probate Code without change. The reference in this section to "incompetent person" includes "a person for whom a conservator may be

appointed." See Section 3603. For background on the provisions of this part, see the Comment to this part under the part heading.

Under subdivision (b)(2), the court may order the payer of the money to pay the expenses, costs, and fees approved and allowed by the court directly to the persons entitled thereto. For example, under subdivision (b), the court may either:

(1) Order pursuant to paragraph (1) that the money be paid to the guardian or conservator of the estate who is further ordered to pay the expenses, costs, and fees approved and allowed by the court to the persons entitled thereto; or

(2) Order pursuant to paragraph (2) that the payer of the money pay such expenses, costs, and fees directly to the persons entitled thereto and the remaining balance to the guardian or conservator of the estate or as otherwise provided in Article 2 (commencing with Section 3610).

§ 3602. Disposition of remaining balance

Comment. Section 3602 continues Section 3602 of the repealed Probate Code with the substitution of language that requires money to be deposited in an insured account in a financial institution in this state for the former language listing various financial institution accounts. The reference in this section to "incompetent person" includes "a person for whom a conservator may be appointed." See Section 3603. For general provisions relating to notice of hearing, see Sections 1200-1221. See also Sections 1260-1265 (proof of giving notice). For background on the provisions of this part, see the Comment to this part under the part heading.

Paragraph (2) of subdivision (c) gives the court the alternative of ordering that all or any part of the money and other property be transferred to a custodian to be subject to the California Uniform Transfers to Minors Act. This alternative gives the custodian more flexibility in handling money (by avoiding the need for court authorization for any withdrawal) and permits a custodian to handle other property (rather than requiring it in every case to become a part of the guardianship estate).

Nothing in the California Uniform Transfers to Minors Act gives a custodian under that act any authority to settle or release a claim of the minor against a third party. Only a guardian of the estate (Prob. Code §§ 2500-2507) or guardian ad litem or other person authorized under another law (see, e.g., Code Civ. Proc. § 372; Prob. Code § 3500) to act for the minor may settle or release such a claim. See Uniform Transfers to Minors Act § 8 comment (1986).

§ 3603. Reference to "incompetent person"

Comment. Section 3603 continues Section 3603 of the repealed Probate Code without substantive change. For background on the provisions of this part, see the Comment to this part under the part heading.

Article 2. Disposition of Money or Other Property Where No Guardianship or Conservatorship

§ 3610. Disposition of remaining balance

Comment. Section 3610 continues Section 3610 of the repealed Probate Code without change. This section makes clear that this article applies only where there is not an existing guardianship or conservatorship of the estate. The section is consistent with subdivision (a) of Section 3602. For provisions relating to the authority of a parent, guardian, conservator, or guardian ad litem to compromise claims and actions, see Sections 2500-2507 and 3500 and Code of Civil Procedure Sections 372 and 373.5. The reference in Section 3610 to "incompetent person" includes "a person for whom a conservator may be appointed." See Section 3603. For background on the provisions of this part, see the Comment to this part under the part heading.

§ 3611. Order of court

Comment. Section 3611 continues Section 3611 of the repealed Probate Code with the substitution of language that requires money to be deposited in an insured account in a financial institution in this state for the former language listing various financial institution accounts. Where the money and other property to be paid or delivered does not exceed $5,000 and is for the benefit of a minor, the court, in its discretion, may make an order under subdivision (a), (b), (c), (d), or (e). Where the amount exceeds $5,000 but does not exceed $20,000, the court has discretion to make an order under subdivision (a), (b), (c), or (e), but not under subdivision (d). Where the amount exceeds $20,000, the court may make an order under subdivision (a), (b), or (e). See also Section 3401 (direct payment to parent without court order). The reference in Section 3611 to "incompetent person" includes "a person for whom a conservator may be appointed." See Section 3603. For background on the provisions of this part, see the Comment to this part under the part heading.

§ 3612. Reservation of jurisdiction until minor attains age 18

Comment. Section 3612 continues Section 3612 of the repealed Probate Code without change. For background on the provisions of this part, see the Comment to this part under the part heading.

CHAPTER 5. PERSONAL PROPERTY OF ABSENT FEDERAL PERSONNEL

Article 1. Definitions

§ 3700. Definitions

Comment. Section 3700 continues Section 3700 of the repealed Probate Code without substantive change. The reference to "divorce" is omitted as unnecessary in view of Section 36 ("dissolution of marriage" includes divorce). For background on this section, see *Recommendation Relating to Missing Persons,* 16 Cal. L. Revision Comm'n Reports 105, 124-25 (1982).

Article 2. Court Proceeding to Set Aside Personal Property of Absentee

§ 3701. Setting aside personal property of absentee

Comment. Section 3701 continues Section 3701 of the repealed Probate Code without change. The authority for the court to provide support for the absentee's family is consistent with the original purpose of the legislation, which was not only to avoid "prejudice to the estates of such missing persons," but also to avoid "difficulty and hardship to their families [caused] by their inability to consummate transactions, such as to sell property, withdraw funds, cash checks, transfer securities and the like, upon which the families are dependent." 1972 Cal. Stat. ch. 988 § 9.

§ 3702. Who may petition

Comment. Section 3702 continues Section 3702 of the repealed Probate Code without change.

§ 3703. Contents of petition

Comment. Section 3703 continues Section 3703 of the repealed Probate Code without substantive change. For general provisions relating to petitions and other papers, see Sections 1020-1023. For background on this section, see *Recommendation Relating to Missing Persons,* 16 Cal. L. Revision Comm'n Reports 105, 125-26 (1982).

§ 3704. Notice of hearing

Comment. Section 3704 continues Section 3704 of the repealed Probate Code without change. For general provisions relating to notice of hearing, see Sections 1200-1221. See also Sections 1260-1265 (proof of giving notice).

§ 3705. Hearing and order

Comment. Section 3705 continues Section 3705 of the repealed Probate Code without substantive change. For general provisions, see Sections 1000-1004 (rules of practice), 1040-1050 (hearings and orders).

§ 3706. Jurisdiction of court not affected by size of absentee's estate

Comment. Section 3706 continues Section 3706 of the repealed Probate Code without substantive change.

§ 3707. Joint tenancy property

Comment. Section 3707 continues Section 3707 of the repealed Probate Code without change.

§ 3708. Accounting

Comment. Section 3708 continues Section 3708 of the repealed Probate Code without change.

Article 3. Management and Disposition of Personal Property of Absentee Without Court Proceeding

Comment. This article supersedes Article 3 (commencing with Section 3710) of Chapter 5 of Part 8 of Division 4 of the repealed Probate Code. The superseded article was enacted upon recommendation of the California Law Revision Commission. See *Recommendation Relating to Missing Persons,* 16 Cal. L. Revision Comm'n Reports 105, 126-28 (1982).

§ 3710. Right of absentee's family to collect and dispose of property

Comment. Section 3710 continues Section 3710 of the repealed Probate Code without substantive change. For background on the provisions of this article, see the Comment to this article under the article heading.

§ 3711. Transfer of evidences of interest, indebtedness, or right

Comment. Section 3711 continues Section 3711 of the repealed Probate Code without change. For background on the provisions of this article, see the Comment to this article under the article heading.

§ 3712. Commencement of time for action by absentee

Comment. Section 3712 continues Section 3712 of the repealed Probate Code with the substitution of "United States" for "continental United States." For background on the provisions of this article, see the Comment to this article under the article heading.

Article 4. Absentee's Power of Attorney

§ 3720. Continuation of expired power of attorney

Comment. Section 3720 continues Section 3720 of the repealed Probate Code without substantive change. For background on this

section, see *Recommendation Relating to Missing Persons,* 16 Cal. L. Revision Comm'n Reports 105, 128 (1982).

CHAPTER 6. REMOVAL OF PROPERTY OF NONRESIDENT

§ 3800. Petition

Comment. Section 3800 continues Section 3800 of the repealed Probate Code without substantive change. For general provisions relating to petitions and other papers, see Sections 1020-1023. See also Sections 1260-1265 (proof of giving notice).

§ 3801. Notice

Comment. Section 3801 continues Section 3801 of the repealed Probate Code without substantive change. For general provisions relating to notice of hearing, see Sections 1200-1221. See also Sections 1260-1265 (proof of giving notice).

§ 3802. Certificate of nonresident fiduciary

Comment. Section 3802 continues Section 3802 of the repealed Probate Code without change. Subdivision (b) (persons who may attest certificate in foreign country) is consistent with Evidence Code Section 1530 (statement certifying genuineness of attestation to accuracy of copy of a writing).

§ 3803. Order for removal

Comment. Section 3803 continues Section 3803 of the repealed Probate Code without substantive change. For general provisions, see Sections 1000-1004 (rules of practice), 1040-1050 (hearings and orders).

PART 9. CALIFORNIA UNIFORM TRANSFERS TO MINORS ACT

Comment. This part supersedes Part 9 (commencing with Section 3900) of Division 4 of the repealed Probate Code. The superseded part was enacted upon recommendation of the California Law Revision Commission. See *Recommendation Relating to Uniform Transfers to Minors Act,* 17 Cal. L. Revision Comm'n Reports 601 (1984). See also *Report of Senate Committee on Judiciary on Assembly Bill 2492,* 18 Cal. L. Revision Comm'n Reports 105 (1986). As to the construction of provisions drawn from uniform acts, see Section 2. See also the Comments of the Uniform Law Commissioners to the Uniform Transfers to Minors Act (1986).

§ 3900. Short title

Comment. Section 3900 continues Section 3900 of the repealed Probate Code without change. This section is the same as Section 24 of the Uniform Transfers to Minors Act (1986).

Background on Section 3900 of Repealed Code

Section 3900 was a new provision added by 1984 Cal. Stat. ch. 243 § 9. For background on the provisions of this part, see the Comment to this part under the part heading.

§ 3901. Definitions

Comment. Section 3901 continues Section 3901 of the repealed Probate Code without change. This section is the same in substance as Section 1 of the Uniform Transfers to Minors Act (1986), except as indicated below.

Section 3901 differs from the Uniform Transfers to Minors Act in the following respects:

(1) *Definition of "adult."* "Adult" is defined in subdivision (a) to mean an individual who has attained the age of 18 years. This is consistent with Civil Code Sections 25 and 27. One effect of this definition is that an individual custodian (other than a transferor-custodian) must be 18 years of age or older. See Section 3909. This minimum age requirement does not apply where the transferor is the custodian (see Section 3909); a transferor may be a custodian without regard to age so long as the transferor has the capacity to make the transfer. Accordingly, if the minor can make an effective transfer of the property under the law relating to emancipation or competence to make a will, gift, or other transfer, a minor may transfer the property to a custodian for his or her own benefit or for the benefit of another minor. For example, Civil Code Section 63 permits an emancipated minor to make a will, gift, or other transfer. This authorizes an emancipated minor to make a transfer to a custodian for the minor's own benefit or for the benefit of another minor and also to serve as the custodian for custodial property the minor transfers under this part for the benefit of another minor.

The definition of "adult" is also used to determine persons who may file petitions under this part. See Section 3918, subdivision (d) ("adult member of the minor's family" may petition the court to designate a successor custodian), subdivision (f) ("adult member of the minor's family" may petition the court to remove the custodian for cause and to designate a successor custodian or to require the custodian to give appropriate bond), Section 3919(a) ("adult member of minor's family" may petition for accounting or determination of custodian's liability).

(2) *Definition of "court."* "Court" is defined in subdivision (e) to mean "the superior court."

(3) *Definition of "financial institution."* Subdivision (h) expands the Uniform Act definition of "financial institution" to include "an industrial loan company licensed and supervised under the laws of this state."

(4) *Definition of "minor."* "Minor" is defined in subdivision (k) to mean an individual who has not attained the age of 18 years (consistent with Civil Code § 25), except that the term "minor" may include an older individual under some circumstances when the term is used with reference to the beneficiary for whose benefit custodial property is held or is to be held. See Sections 3920, 3920.5. When used with reference to a beneficiary for whose benefit custodial property is held or is to be held, "minor" is defined in subdivision (k)(2) as an individual who has not attained the age at which the custodial property is to be transferred to the beneficiary. This age depends upon the type of transfer and whether the transfer specifically provides for the custodianship to continue until the minor attains an age older than 18 years of age. See Sections 3920 and 3920.5 and the Comments thereto. Where a custodianship may continue until a specified age older than 18, the custodianship may be established after the beneficiary has attained the age of 18 and may continue for so long as is specifically provided but not longer than the maximum duration permitted for a custodianship created by that type of transfer.

The definition of "benefit plan" in subdivision (b) is intentionally very broad and is meant to cover any contract, plan, system, account, or trust, such as a pension plan, retirement plan, death benefit plan, deferred compensation plan, employment agency arrangement, or stock bonus, option, or profit sharing plan.

The definition of "conservator" in subdivision (d) conforms to the Uniform Transfers to Minors Act. For California purposes, the term means the guardian of the estate of the minor, if the minor has not attained the age of 18 years (Prob. Code § 1600) and the conservator of the estate if the "minor" has attained the age of 18 years (Prob. Code § 1800.3).

The definition of "custodial property" in subdivision (f) encompasses every conceivable legal or equitable interest in property of any kind, including real property and tangible or intangible personal property. The term is intended, for example, to include joint interests with right of survivorship and beneficial interests in land trusts, as well as all other intangible interests in property. Contingent or expectancy interests such as the designation as a beneficiary under insurance policies or benefit plans become "custodial property" only if the designation is irrevocable,

or when it becomes so, but this part specifically authorizes the "nomination" of a future custodian as beneficiary of such interests (see Section 3903). Proceeds of custodial property, both immediate and remote, are themselves custodial property.

Custodial property is defined without reference to the physical location of the property, even if it has one. No useful purpose would be served by restricting the application of this part to, for example, real estate "located in this state," since a conveyance recorded in the state of the property's location, if done with proper formalities, should be effective even if that state has not enacted the Uniform Transfers to Minors Act. The rights, duties and powers of the custodian should be determined by reference to the law of the state under which the custodianship is created, assuming there is sufficient nexus under Section 3902 between that state and the transferor, the minor, or the custodian.

The definition of "transfer" in subdivision (o) reflects the application of this part not only to gifts, but also to distributions from trusts and estates, obligors of the minor, and transfers of the minor's own assets to a custodianship by the legal representative of a minor, all of which are permitted by this part.

"Transferor" as defined in subdivision (p) includes not only the maker of a gift (i.e., a donor in the usual sense), but also fiduciaries and obligors who control or own property that is the subject of the transfer. Nothing requires that a transferor be an "adult." See discussion, supra, this Comment.

Only entities authorized to exercise "general" trust powers qualify as "trust companies" under subdivision (q); the authority to exercise only limited fiduciary responsibilities, such as the authority to accept Individual Retirement Account deposits, is not sufficient.

Background on Section 3901 of Repealed Code

Section 3901 was added by 1984 Cal. Stat. ch. 243 § 9. Section 3901 superseded former Civil Code Section 1155 (repealed by 1984 Cal. Stat. ch. 243 § 1) which provided definitions for the former California Uniform Gifts to Minors Act. To reflect the broader scope and the unlimited types of property to which the new California Uniform Transfers to Minors Act applies, a number of definitional changes were from the old California Uniform Gifts to Minors Act. For background on the provisions of this part, see the Comment to this part under the part heading.

Several definitions in the old Uniform Act specifically applicable to limited types of property (cash, securities, and insurance policies) covered before the expansion of the scope of the Uniform Act were omitted as unnecessary. These omitted definitions included the definitions of "bank," "issuer," "life or endowment insurance policies and annuity contracts," "savings and loan association," "security," and "transfer agent." No change in the meaning or construction of those terms as used in this part was intended by such omissions. See Uniform Transfers to Minors Act § 1 comment (1986). The substantive effect of the definition of "[l]ife or endowment insurance policies and annuity contracts" in the old Act was superseded by Section 3901(f) and

subdivision (b)(2) of Section 3912 (right to retain property transferred to custodian) and subdivision (c) of Section 3912 (right to invest in or pay premiums on insurance or endowment policies). The definition of "insured financial institution" was omitted because the prudent person rule of Section 3912(b) may dictate the use of insured institutions or depositories, without having the Act so specify. See Uniform Transfers to Minors Act § 1 comment (1986).

The principal changes or additions to the remaining definitions contained in former Civil Code Section 1155 are discussed below.

Subdivision (a). Subdivision (a), defining "adult," continued subdivision (a) of former Section 1155 of the Civil Code. The requirement of former law—Civil Code Section 1156(a) (repealed by 1984 Cal. Stat. ch. 243 § 1)—that the donor be an "adult" was not continued.

Subdivision (b). The definition of "benefit plan" was new and drawn from the Uniform Transfers to Minors Act § 1(2).

Subdivision (d). The term "conservator" was defined instead of "guardian" to conform to the Uniform Transfers to Minors Act § 1(4).

Subdivision (e). The definition of "court" continued the definition of former Civil Code § 1155(d).

Subdivision (f). The definition of "custodial property" was generalized to conform to the Uniform Transfers to Minors Act § 1(6).

Subdivision (h). The definition of "financial institution" continued a provision of the definition of former Civil Code § 1155(g).

Subdivision (j). The definition of "member of the minor's family" expanded the definition under former Civil Code Section 1155 to include the minor's stepparent and spouse.

Subdivision (k). When used with reference to a beneficiary for whose benefit custodial property is held or is to be held, "minor" was defined as an individual who has not attained the age at which the custodial property is to be transferred to the beneficiary. Under former Civil Code Section 1155(m), the age of termination of the custodianship had been lowered from 21 to 18 (1972 Cal. Stat. ch. 579 § 11) to conform to the lowering of the age of majority from 21 to 18 (1971 Cal. Stat. ch. 1748 § 23).

Subdivision (m). The new definition of "personal representative" was based upon that definition in Section 1-201(30) of the Uniform Probate Code (1987). This definition was the same in substance as the Uniform Transfers to Minors Act § 1(13).

Subdivision (o). The new definition of "transfer" was necessary to reflect the application of the Act not only to gifts, but also to distributions from trusts and estates, obligors of the minor, and transfers of the minor's own assets to a custodianship by the legal representative of a minor, all of which are permitted by the Uniform Transfers to Minors Act and under this part.

Subdivision (p). The new definition of "transferor" was required because the term includes not only the maker of a gift, i.e., a donor in the usual sense, but also fiduciaries and obligors who control or own property that is the subject of the transfer.

Subdivision (q). The new definition of "trust company" replaced the definition of former Civil Code Section 1155 (which defined a trust company by reference to Financial Code Sections 107 and 109).

§ 3902. Scope and jurisdiction

Comment. Section 3902 continues Section 3902 of the repealed Probate Code without change. This section is the same as Section 2 of the Uniform Transfers to Minors Act (1986). The section attempts to

resolve uncertainties and conflicts-of-law questions that have frequently arisen because of the former non-uniformity of Uniform Gifts to Minors Act (1966) in the various states and which may continue to arise during the transition from the Uniform Gifts to Minors Act to the Uniform Transfers to Minors Act.

The creation of a custodianship must invoke the law of a particular state because of the form of the transfer required under subdivision (a) of Section 3909. Section 3902 provides that a choice of the California Uniform Transfers to Minors Act is appropriate and effective if any of the nexus factors specified in subdivision (a) exists at the time of the transfer. The California Uniform Transfers to Minors Act continues to govern, and subdivision (b) makes the custodian subject to personal jurisdiction in the courts of this state for the duration of the custodianship, despite subsequent relocation of the parties or the property.

Subdivision (c) recognizes that residents of California may elect to have the law of another state apply to a transfer. That choice is valid if a nexus with the chosen state exists at the time of the transfer. If personal jurisdiction can be obtained in California under other law apart from the California Uniform Transfers to Minors Act, the custodianship may be enforced in a California court, which is directed to apply the law of the state elected by the transferor.

If the choice of law under subdivision (a) or (c) is ineffective because of the absence of the required nexus, the transfer may still be effective under the Uniform Transfers to Minors Act of another state with which a nexus does exist. See Uniform Transfers to Minors Act § 21 (1986) (Prob. Code § 3922).

Background on Section 3902 of Repealed Code

Section 3902 was a new provision added by 1984 Cal. Stat. ch. 243 § 9. For background on the provisions of this part, see the Comment to this part under the part heading.

§ 3903. Nomination of custodian

Comment. Section 3903 continues Section 3903 of the repealed Probate Code without change. This section is the same as Section 3 of the Uniform Transfers to Minors Act (1986).

Section 3903 permits a future custodian for a minor to be nominated to receive a distribution under a will or trust, or as a beneficiary of a power of appointment, or of contractual rights such as a life or endowment insurance policy, annuity contract, P.O.D. account, benefit plan, or similar future payment right. Nomination of a future custodian does not constitute a "transfer" under this Act and does not create custodial property. If it did, the nomination and beneficiary designation would have to be permanent, since a "transfer" is irrevocable and indefeasibly

vests ownership of the interest in the minor under subdivision (b) of Section 3911. Instead, Section 3903 permits a revocable beneficiary designation that takes effect only when the donor dies or when a lifetime transfer to the custodian for the minor beneficiary occurs, such as a distribution under an inter vivos trust. However, an unrevoked nomination under Section 3903 is binding on a personal representative or trustee (see subdivision (b) of Section 3905) and on insurance companies and other obligors who contract to pay in the future (see subdivision (b) of Section 3907).

The person making the nomination may name contingent or successive future custodians to serve, in the order named, in the event that the person first nominated dies, or is unable, declines, or is ineligible to serve. Such a substitute future custodian is a custodian "nominated . . . under Section 3903" to whom the transfer must be made under subdivision (b) of Section 3905 and subdivision (b) of Section 3907.

Any person nominated as future custodian may decline to serve before the transfer occurs and may resign at any time after the transfer. See Section 3918.

The transferor may designate one or more persons as successor custodians to serve, in the designated order of priority, in case the custodian originally designated or a prior successor custodian is unable, declines, or is ineligible to serve or resigns, dies, becomes incapacitated, or is removed. See Section 3918(b).

Background on Section 3903 of Repealed Code

Section 3903 was a new provision added by 1984 Cal. Stat. ch. 243 § 9. No provision like Section 3903 was included in the former California statute. But see former Probate Code Section 6340 (repealed by 1984 Cal. Stat. ch. 243 § 10) which permitted a person to designate in his or her will the custodian to receive property devised under the will to a minor to be transferred to a designated custodian for the benefit of a minor. For background on the provisions of this part, see the Comment to this part under the part heading.

§ 3904. Transfer by gift or exercise of power of appointment

Comment. Section 3904 continues Section 3904 of the repealed Probate Code without change. This section is the same as Section 4 of the Uniform Transfers to Minors Act (1986).

To emphasize the different kinds of transfers that create presently effective custodianships under this Act, they are separately described in Sections 3904, 3905, 3906, and 3907. Section 3904 covers not only the traditional lifetime gift but also an irrevocable exercise of a power of appointment in favor of a custodian, as distinguished from the exercise of a power in a revocable instrument that results only in the nomination of a future custodian under Section 3903.

A custodianship created under this section will terminate upon the minor's attainment of the age of 18 unless the transfer specifies a later time. In the case of the traditional lifetime transfer, the custodianship cannot be continued after the time the beneficiary attains 21 years of age. This limitation satisfies the requirements of Section 2503(c) of the Internal Revenue Code which permits "minority trusts" to continue in effect until age 21. In the case of an irrevocable exercise of a power of appointment in favor of a custodian, the custodianship cannot be continued after the time the beneficiary attains 25 years of age. See Section 3920 and 3920.5 and the Comments thereto. A custodianship created under this section may be created for a beneficiary who has already attained the age of 18 if the transfer provides that the custodianship is to continue until the beneficiary attains a specified age older than 18. See Section 3901(k).

Background on Section 3904 of Repealed Code

Section 3904 was added by 1984 Cal. Stat. ch. 243 § 9. Section 3904 in part corresponded to subdivision (a) of former Civil Code Section 1156 (repealed by 1984 Cal. Stat. ch. 243 § 1) but was broader than that provision which covered only the traditional lifetime gift. Section 3904 did not continue the requirement of former Civil Code Section 1156 that the donor be an "adult person." See the Comment to subdivision (a) of Section 3901. See also *Report of Senate Committee on Judiciary on Assembly Bill 2492*, 18 Cal. L. Revision Comm'n Reports 105, 108 (1986). For background on the provisions of this part, see the Comment to this part under the part heading.

§ 3905. Transfer authorized by will or trust

Comment. Section 3905 continues Section 3905 of the repealed Probate Code without change. This section is the same as Section 5 of the Uniform Transfers to Minors Act (1986). The section includes not only a testamentary disposition but also makes clear that a trustee may make a transfer to a custodian for the benefit of a minor as authorized in the governing trust. Section 3905 also authorizes the personal representative or trustee to designate the custodian whenever the settlor or testator fails to make a nomination or whenever a future custodian nominated under Section 3903 (and any alternate named) fails to qualify. See also Section 3918.

A custodianship created under this section will terminate upon the minor's attainment of the age of 18 unless a later time is specified in the will or trust and in the transfer, but in no event does the custodianship continue after the time the minor attains 25 years of age. See Section 3920 and 3920.5 and the Comments thereto. A custodianship created under this section may be created for a beneficiary who has already attained age 18 if the will or trust provides that the custodianship is to

continue until the beneficiary attains a specified age older than 18. See Section 3901(k).

Background on Section 3905 of Repealed Code

Section 3905 was added by 1984 Cal. Stat. ch. 243 § 9. Former Probate Code Section 6340 (repealed by 1984 Cal. Stat. ch. 243 § 10) permitted a testator to devise any kind of property to a custodian subject to the California Uniform Gifts to Minors Act. Section 3905 expanded the authorization of former Probate Code Section 6340 to include not only a testamentary disposition but also to make clear that a trustee may make a transfer to a custodian for the benefit of a minor as authorized in the governing trust. See also *Report of Senate Committee on Judiciary on Assembly Bill 2492*, 18 Cal. L. Revision Comm'n Reports 105, 108 (1986). For background on the provisions of this part, see the Comment to this part under the part heading.

§ 3906. Other transfer by fiduciary

Comment. Section 3906 continues Section 3906 of the repealed Probate Code without change. This section is the same as Section 6 of the Uniform Transfers to Minors Act (1986).

Section 3906 permits custodianships to be used as guardianship substitutes, even though not specifically authorized by the person whose property is the subject of the transfer. Subdivision (a) permits the personal representative of a decedent's estate or a trustee to transfer estate property to a custodian for the benefit of a minor in the absence of a will or under a will or trust that does not contain an authorization to do so. Subdivision (b) permits the guardian of the estate of a minor to transfer the minor's own property to a new or existing custodianship for the purpose of convenience or economies of administration.

A custodianship may be created under this section even though not specifically authorized by the transferor, the testator, or the settlor of the trust if three tests are satisfied. First, the fiduciary making the transfer must determine in good faith and in his or her fiduciary capacity that a custodianship will be in the best interest of the minor. Second, a custodianship may not be prohibited by, or inconsistent with, the terms of any governing instrument. Inconsistent terms would include, for example, a spendthrift clause in a governing trust, provisions terminating a governing trust for the minor's benefit at a time other than the time of the minor's age of majority, and provisions for mandatory distributions of income or principal at specific times or periodic intervals. Provisions for other outright distributions or bequests would not be inconsistent with the creation of a custodianship under this section. Third, the amount of property transferred (as measured by its value) must be of such relatively small amount ($10,000 or less in value) that the lack of court supervision and the typically stricter investment standards that would apply to a guardianship will not be important. However, if the property is of greater

value, transfer to a custodian may still be made if the court approves and if the other two tests are met.

The custodianship created under this section without express authority in the governing instrument will terminate upon the minor's attainment of the age of 18, the same age at which a guardianship of the estate would end. See Section 3920 and the Comment thereto.

Background on Section 3906 of Repealed Code

Section 3906 was a new provision added by 1984 Cal. Stat. ch. 243 § 9. See also *Report of Senate Committee on Judiciary on Assembly Bill 2492*, 18 Cal. L. Revision Comm'n Reports 105, 108 (1986). For background on the provisions of this part, see the Comment to this part under the part heading.

§ 3907. Transfer by obligor

Comment. Section 3907 continues Section 3907 of the repealed Probate Code without change. This section is the same as Section 7 of the Uniform Transfers to Minors Act (1986).

Like Section 3906, Section 3907 permits a custodianship to be established as a substitute for a guardianship to receive payments due a minor from sources other than estates, trusts, and existing guardianships covered by Sections 3905 and 3906. For example, a tort judgment debtor of a minor, a bank holding a joint or P.O.D. account of which a minor is the surviving payee, or an insurance company holding life insurance policy or benefit plan proceeds payable to a minor may create a custodianship under this section.

Use of this section is mandatory when a future custodian has been nominated under Section 3903 as a named beneficiary of an insurance policy, benefit plan, deposit account, or the like, because the original owner of the property specified a custodianship (and a future custodian) to receive the property. If that custodian (or any alternate named) is not available, if none was nominated, or none could have been nominated (as in the case of a tort judgment payable to the minor), this section is permissive and does not preclude the obligor from requiring the establishment of a guardianship of the estate to receive payment. The section merely allows the obligor to transfer to a custodian unless the property exceeds the stated value in which case a guardian of the estate must be appointed to receive it or some other procedure used (See Sections 3410-3413, 3600-3612).

Background on Section 3907 of Repealed Code

Section 3907 was a new provision added by 1984 Cal. Stat. ch. 243 § 9. For background on the provisions of this part, see the Comment to this part under the part heading.

§ 3908. Receipt for custodial property

Comment. Section 3908 continues Section 3908 of the repealed Probate Code without change. This section is the same as Section 8 of the Uniform Transfers to Minors Act (1986).

Section 3908 discharges transferors from further responsibility for custodial property delivered to and receipted for by the custodian. See also Section 3916 which protects transferors and other third parties dealing with custodians. A discharge or release for a donative transfer is not necessary. But see Section 3402 (effect of written receipt of parent).

Section 3908 does not authorize an existing custodian, or a custodian to whom an obligor makes a transfer under Section 3907, to settle or release a claim of the minor against a third party. Only a guardian, guardian ad litem or other person authorized under other law to act for the minor may release such a claim. See the Comment to Section 3602.

Background on Section 3908 of Repealed Code

Section 3908 was a new provision added by 1984 Cal. Stat. ch. 243 § 9. For background on the provisions of this part, see the Comment to this part under the part heading.

§ 3909. Methods of creation and transfer of custodial property

Comment. Section 3909 continues Section 3909 of the repealed Probate Code without change. It is the same in substance as Section 9 of the Uniform Transfers to Minors Act (1986).

Subdivision (a) describes how the property is to be transferred and persons eligible to serve as custodian:

Paragraph (1) of subdivision (a) permits a transfer of securities in registered form to be accomplished without registering the transfer in the name of the custodian. This permits securities to be held by custodians in street names. Although the transferor may serve as the custodian when the security is registered in the name of the custodian under subparagraph (A) of paragraph (1), the transferor may not serve as a custodian if the security is transferred in the manner provided in subparagraph (B) of paragraph (1).

Paragraph (3) of subdivision (a) covers the irrevocable transfer of ownership of life and endowment insurance policies and annuity contracts. It provides for registration with the issuer in the name of the custodian (in which case the transferor is eligible to serve as custodian) or for an assignment in writing delivered to the custodian (in which case the transferor is not eligible to serve as custodian).

Paragraph (4) of subdivision (a) covers the irrevocable exercise of a power of appointment and the irrevocable present assignment of future payments rights (such as royalties, interest and principal payments under

a promissory note, or beneficial interests under life or endowment or annuity insurance contracts or benefit plans). The payor, issuer, or obligor may require additional formalities such as completion of a specific assignment form and an endorsement, but the transfer is effective upon delivery of the notification to the payor, issuer, or other obligor that the right is transferred to the custodian. Compare Section 3903 and the Comment thereto for the procedure for revocably "nominating" a future custodian as a beneficiary of a power of appointment or such payment rights.

Paragraph (5) of subdivision (a) provides the exclusive method for the transfer of real property, including a disposition made by a will. The transfer of an interest in real property must be recorded in the name of the custodian in order that the transfer be an effective transfer.

Paragraph (6) of subdivision (a) covers the transfer of tangible personal property (such as automobiles and aircraft) subject to registration of ownership with a state or federal agency. Either registration of the transfer in the name of the custodian (in which case the transferor is eligible to serve as custodian) or delivery of the endorsed certificate in registerable form (in which case the transferor is not eligible to serve as custodian) makes the transfer effective.

Paragraph (7) of subdivision (a) is a residual classification, covering all property not otherwise covered in the preceding paragraphs. Examples would include partnership interests and tangible personal property not subject to title certificates. The transferor is not eligible to be a custodian of property transferred under paragraph (7).

Execution of the acceptance by the custodian on the form of transfer document set forth in subdivision (b) is sufficient to satisfy the requirements of subparagraph (B) of paragraph (1) and paragraph (7) of subdivision (a). While such a form of written acceptance is not specifically required in the case of registered securities under subdivision (a)(1), money under subdivision (a)(2), insurance contracts or interests under subdivision (a)(3) or (4), real estate under subdivision (a)(5), or titled personal property under subdivision (a)(6), it is certainly the better and recommended practice to obtain the acknowledgment, consent, and acceptance of the designated custodian on the instrument of transfer or otherwise.

Failure of the transferor to comply with subdivision (c) does not affect the validity of a transfer. See Section 3911(a).

Background on Section 3909 of Repealed Code

Section 3909 was added by 1984 Cal. Stat. ch. 243 § 9 and was amended by 1989 Cal. Stat. ch. 544 § 3. Section 3909 provided more detailed rules than former Civil Code Section 1156 (repealed by 1984 Cal. Stat. ch. 243 § 1) concerning the manner of

creating custodial property and effecting the transfer. The 1989 amendment revised the former reference in the introductory clause of subdivision (b) to refer to "subparagraph (B)" rather than "subparagraph (A)"; this corrected an obvious error and made the provision conform to the Uniform Transfers to Minors Act (1986). See also *Communication from the California Law Revision Commission Concerning Assembly Bill 158*, 20 Cal. L. Revision Comm'n Reports 235 (1990). For background on the provisions of this part, see the Comment to this part under the part heading.

Subdivision (a) of Section 3909 superseded subdivision (a) of former Civil Code Section 1156. Paragraph (1) of subdivision (a) continued the substance of paragraphs (1) and (2) of subdivision (a) of former Section 1156 relating to securities and also permitted a transfer of securities in registered form to be accomplished without registering the transfer in the name of the custodian. Paragraph (2) of subdivision (a) continued the substance of paragraph (3) of subdivision (a) of former Civil Code Section 1156 relating to money credited to a custodial account. Paragraph (3) of subdivision (a) superseded paragraph (4) of subdivision (a) of former Civil Code Section 1156. Paragraph (4) of subdivision (a) was a new provision. Paragraph (5) of subdivision (a) changed the former law which required that the transfer be made "by executing and delivering in the appropriate manner a deed, assignment, or similar instrument" to the custodian. Former Civil Code § 1156(a)(5). Paragraph (6) of subdivision (a) was a new provision. Paragraph (7) of subdivision (a) was comparable to paragraph (6) of subdivision (a) of former Civil Code Section 1156; but, unlike the former California law, the transferor was not eligible to be a custodian of property transferred under paragraph (7) of subdivision (a) of Section 3909.

Former California law did not provide for the form for a transfer document such as is provided in subdivision (b) of Section 3909 except for the gift of a security not in registered form under former Civil Code Section 1156(a)(2).

§ 3910. Single custodianship

Comment. Section 3910 continues Section 3910 of the repealed Probate Code without change. This section is the same in substance as Section 10 of the Uniform Transfers to Minors Act (1986).

Under Section 3910, additional transfers at different times and from different sources may be made to an existing custodian for the minor and do not create multiple custodianships. For the purpose of consolidating assets in a single custodianship, an existing custodian may be named as successor custodian by another custodian for the same minor who resigns under Section 3918. Note, however, that these results are limited to transfers made "under this part." Gifts previously made under the California Uniform Gifts to Minors Act or under the Uniform Gifts to Minors Act or Uniform Transfers to Minors Act of another state must be treated as separate custodianships, even though the same custodian and minor are involved, because of possible differences in the age of distribution and custodian's powers under those other Acts. But see Section 3923 (transfers made before January 1, 1985).

Even when all transfers to a single custodian are made "under this part" and a single custodianship results, custodial property transferred under Sections 3906 and 3907 or under Section 3412, 3413, 3602, or

3611 may have to be accounted for separately from property transferred under or pursuant to Section 3903, 3904, or 3905 because the custodianship may terminate sooner with respect to the former property. See Sections 3920 and 3920.5 and the Comments thereto.

Background on Section 3910 of Repealed Code

Section 3910 was added by 1984 Cal. Stat. ch. 243 § 9. The first sentence of Section 3910 continued subdivision (b) of former Civil Code Section 1156 (repealed by 1984 Cal. Stat. ch. 243 § 1). The second sentence of Section 3910 stated what was implicit in the former law. See *Report of Senate Committee on Judiciary on Assembly Bill 2942*, 18 Cal. L. Revision Comm'n Reports 105, 110 (1986). For background on the provisions of this part, see the Comment to this part under the part heading.

§ 3911. Validity and effect of transfer

Comment. Section 3911 continues Section 3911 of the repealed Probate Code without change. Subdivisions (a), (b), and (c) are the same as Section 11 of the Uniform Transfers to Minors Act (1986). The transferor's designation of himself or herself as custodian of property for which the transferor is not eligible to serve as custodian under subdivision (a) of Section 3909 makes the transfer ineffective. See the Comment to Section 3909. For a list of the immunities enjoyed by third persons under subdivision (c), see Section 3916 and the Comment thereto

Subdivisions (d), (e), and (f) are not included in the Uniform Transfers to Minors Act. These subdivisions are included in Section 3911 to make clear that (1) a person serving as guardian of the estate of the minor may also serve as custodian under this part and in this case the custodial property does not become a part of the guardianship estate and (2) property may be transferred from a guardianship estate to the person who serves as guardian to be held by that person as custodian under this part and in such case the property is no longer a part of the guardianship estate but instead is governed solely by this part.

Background on Section 3911 of Repealed Code

Section 3911 was added by 1984 Cal. Stat. ch. 243 § 9. Subdivision (a) of Section 3911 generally continued the substance of the last portion of subdivision (c) of former Civil Code Section 1156 (repealed by 1984 Cal. Stat. ch. 243 § 1). The balance of Section 3911 generally continued former Civil Code Section 1157 (repealed by 1984 Cal. Stat. ch. 243 § 1) with a number of necessary, and perhaps significant, changes required by the new kinds of property subject to custodianship. Former Civil Code Section 1157 provided that a transfer made in accordance with its terms "conveys to the minor indefeasibly vested legal title to the custodial property." Because equitable interests in property may be the subject of a transfer under this Act, the reference to "legal title" was deleted, but no change concerning the effect or finality of the transfer was intended. However, subdivision (b) of Section 3911 qualified the rights of the minor in the property by making them subject to "the rights, powers, duties, and authority" of the custodian under this part, a concept that may have been implicit and intended in former Civil Code Section 1157, but was not expressed. For background on the provisions of this part, see the Comment to this part under the part heading.

§ 3912. Care of custodial property

Comment. Section 3912 continues Section 3912 of the repealed Probate Code without change. This section is the same in substance as Section 12 of the Uniform Transfers to Minors Act (1986) except as indicated below.

Subdivision (b) does not include the provision of the Uniform Transfers to Minors Act which specifically provides a slightly higher standard for professional fiduciaries. However, in determining what constitutes "the standard of care that would be observed by a prudent person dealing with the property of another" under subdivision (b), a professional custodian (such as a trust company or the trust department of a bank) is held to a greater standard of care based on its presumed expertise than a lay custodian. Cf. Estate of Beach, 15 Cal. 3d 623, 542 P.2d 994, 125 Cal. Rptr. 570 (1975) (executor). See also the Comments to Sections 2401 (guardian or conservator) and 16040 (trustee).

No provision comparable to subdivision (b)(1) is found in the Uniform Transfers to Minors Act. This provision is included because it is likely to reflect the desires of the transferor who makes a transfer to a custodian who serves without compensation.

Subdivision (d) includes a provision of the Uniform Transfers to Minors Act requiring that custodial property consisting of an undivided interest be held as a tenant in common. This provision permits the custodian to invest custodial property in common trust funds, mutual funds, or in a proportional interest in a "jumbo" certificate of deposit. Investment in property held in joint tenancy with right of survivorship is not permitted, but this does not preclude a transfer of such an interest to a custodian, and the custodian is authorized under subdivision (b) to retain a joint tenancy interest so received.

Subdivision (e) includes the requirement of the Uniform Transfers to Minors Act that income tax information be maintained and made available for preparation of the minor's tax returns. Because the custodianship is not a separate legal entity or taxpayer, the minor's tax identification number should be used to identify all custodial property accounts.

Background on Section 3912 of Repealed Code

Section 3912 was added by 1984 Cal. Stat. ch. 243 § 9. For background on the provisions of this part, see the Comment to this part under the part heading. See also *Report of Senate Committee on Judiciary on Assembly Bill 2492*, 18 Cal. L. Revision Comm'n Reports 105, 110-11 (1986).

Subdivision (a) expanded subdivision (a) of former Civil Code Section 1158 (repealed by 1984 Cal. Stat. ch. 243 § 1) to include the duties to take control and appropriately register or record custodial property in the name of the custodian.

Subdivision (b) restated and made somewhat stricter the prudent man fiduciary standard for the custodian, since Section 3912 cast the standard in terms of a prudent person "dealing with property of another" rather than one "who is seeking a reasonable income and preservation of his capital," as under subdivision (e) of former Civil Code Section 1158. Subdivision (b)(1) of Section 3912 continued subdivision (e) of former Civil Code Section 1159 (repealed by 1984 Cal. Stat. ch. 243 § 1)—a special immunity from liability for the custodian for losses to custodial property where the custodian is not compensated.

Subdivision (e) of former Civil Code Section 1158 permitted a custodian to retain any security received, without the obligation to diversify investment. Subdivision (b)(2) of Section 3912 extended that rule to any property received.

Subdivision (c) of Section 3912 was a new provision.

Subdivision (d) generally continued subdivision (g) of former Civil Code Section 1158, but added the provision requiring that custodial property consisting of an undivided interest be held as a tenant in common.

Subdivision (e) continued subdivision (h) of former Civil Code Section 1158, but added the requirement that income tax information be maintained and made available for preparation of the minor's tax returns.

§ 3913. Powers of custodian

Comment. Section 3913 continues Section 3913 of the repealed Probate Code without change. This section is the same in substance as Section 13 of the Uniform Transfers to Minors Act (1986).

Subdivision (a) replaces the specific list of custodian's powers contained in the former Uniform Gifts to Minors Act. The Uniform Law Commissioners decided not to expand that list to try to deal with all forms of property now covered by the Uniform Transfers to Minors Act and not to specify all powers that might be appropriate for each kind of property, nor to refer to an existing body of state law, such as a statutory provision stating powers of a trustee, since such powers would not be uniform. Instead, this provision grants the custodian the very broad and general powers of an unmarried adult owner of the property, subject to the prudent person rule and to the duties of segregation and record keeping specified in Section 3912. (See subdivision (b) of Section 3913). This approach permits the Uniform Transfers to Minors Act to be self-contained and more readily understandable by volunteer, non-professional fiduciaries, who most often serve as custodians. It is intended that the authority granted includes the powers most often suggested for custodians, such as the power to borrow, whether at interest or interest free, the power to invest in common trust funds, and the power to enter contracts that extend beyond the termination of the custodianship.

Subdivision (a) further specifies that the custodian's power or incidents of ownership in custodial property such as insurance policies may be exercised only in the capacity as custodian. This provision is

intended to prevent the exercise of those powers for the direct or indirect benefit of the custodian, so as to avoid as nearly as possible the result that a custodian who dies while holding an insurance policy on his or her own life for the benefit of a minor will have the policy taxed in his estate. See I.R.C. § 2042. But compare Terriberry v. United States, 517 F.2d 286 (5th Cir. 1975) cert. denied, 424 U.S. 977 (1976); Rose v. United States, 511 F.2d 259 (5th Cir. 1975).

Background on Section 3913 of Repealed Code

Section 3913 was added by 1984 Cal. Stat. ch. 243 § 9. Subdivision (a) replaced the specific list of custodian's powers contained in subdivisions (f), (i), and (j) of former Civil Code Section 1158 (repealed by 1984 Cal. Stat. ch. 243 § 1). For background on the provisions of this part, see the Comment to this part under the part heading.

§ 3914. Use of custodial property

Comment. Section 3914 continues Section 3914 of the repealed Probate Code without change. Subdivisions (a), (b), and (c) are the same as Section 14 of the Uniform Transfers to Minors Act (1986). Subdivision (d) is not included in the Uniform Act.

The "use and benefit" standard in subdivisions (a) and (b) is intended to avoid the implication that the custodial property can be used only for the required support of the minor. The "use and benefit" standard permits, for example, payment of the minor's legally enforceable obligations such as tax or child support obligations or tort claims. Custodial property can be reached by levy of a judgment creditor in any event, so there is no reason not to permit custodian or court-ordered expenditures for enforceable claims.

An "interested person" authorized to file a petition under subdivision (b) includes not only the parent or conservator or guardian of the minor and a transferor or a transferor's legal representative, but also a public agency or official with custody of the minor and a third party to whom the minor owes legally enforceable debts.

The Internal Revenue Service has taken the position that the income from custodial property, to the extent it is used for the support of the minor-donee, is includable in the gross income of any person who is legally obligated to support the minor-donee, whether or not that person or parent is serving as the custodian. Rev. Rul. 56-484, 1956-2 C.B. 23; Rev. Rul. 59-357, 1959-2 C.B. 212. However, Treasury Regulation § 1.662(a)-4 (1980) provides that the term "legal obligation" includes a legal obligation to support another person if, and only if, the obligation is not affected by the adequacy of the dependent's own resources. Thus, if under local law a parent may use the resources of a child for the child's support in lieu of supporting the child himself or herself, no obligation of

support exists, whether or not income is actually used for support, at least if the child's resources are adequate. See 3 B. Bittker, Federal Taxation of Income, Estates and Gifts § 80.4.4 (1981). For this reason, subdivision (c) specifies that distributions or expenditures may be made for the minor without regard to the duty or ability of any other person to support the minor and that distributions or expenditures are not in substitution for, and shall not affect, the obligation of any person to support the minor.

Subdivision (d) of Section 3914 is a provision not found in the Uniform Transfers to Minors Act. This provision permits a transferor who is also a custodian to elect to eliminate the authority of the custodian to distribute property for the minor's use or benefit except pursuant to a court order. The section was added to the California statute in an effort to solve the tax problems that may arise when the transferor makes a transfer to a minor under the Act and designates himself or herself as custodian. For a discussion of the provision, see Review of Selected 1965 Code Legislation 52-53 (Cal. Cont. Ed. Bar 1965).

Background on Section 3914 of Repealed Code

Section 3914 was added by 1984 Cal. Stat. ch. 243 § 9. For background on the provisions of this part, see the Comment to this part under the part heading.

Subdivisions (a) and (b) continued subdivisions (b) and (c) of former Civil Code Section 1158 (repealed by 1984 Cal. Stat. ch. 243 § 1), with two changes. The standard for expenditure of custodial property was revised to substitute "for the use and benefit of the minor" for the language "for the support, maintenance, education, and benefit of the minor" used in former Section 1158. Subdivision (b) expanded the authority to file a petition under former Civil Code Section 1158 to permit a petition to be filed by "an interested person."

Subdivision (c) was a new provision. Subdivision (d) continued the substance of former Civil Code Section 1158.5 (repealed by 1984 Cal. Stat. ch. 243 § 1).

§ 3915. Custodian's expenses, compensation, and bond

Comment. Section 3915 continues Section 3915 of the repealed Probate Code without change. This section is the same as Section 15 of the Uniform Transfers to Minors Act (1986). Compensation may be determined by agreement, by a provision in a will (see Section 6345), by reference to a statute, or by a court order. To prevent abuse, the provision for permissive compensation is denied to a custodian who is also the donor of the custodial property.

The custodian's election to charge compensation must be exercised (although the compensation need not be actually paid) at least annually or it lapses and may not be exercised later. This provision is intended to avoid imputed income to the custodian who waives compensation, and also to avoid the accumulation of a large unanticipated claim for compensation exercisable at termination of the custodianship.

Background on Section 3915 of Repealed Code

Section 3915 was added by 1984 Cal. Stat. ch. 243 § 9. Section 3915 superseded former Civil Code Section 1159 (repealed by 1984 Cal. Stat. ch. 243 § 1). For background on the provisions of this part, see the Comment to this part under the part heading.

Section 3915 did not continue the statement in the former section that a custodian may act without compensation for services, since that concept is implied in the provision in Section 3915 that a custodian has an "election" to be compensated.

Section 3915 omits as surplusage the standard contained in subdivision (c) of former Civil Code Section 1159 for determining "reasonable compensation" which included, "in the order stated," a direction by the donor, statutes governing compensation of custodians or guardians, or court order. This was an optional provision of the Uniform Gifts to Minors Act (1966) and was not continued in the Uniform Transfers to Minors Act (1986). While compensation of custodians became a more likely occurrence and a more important issue under the Uniform Transfers to Minors Act because property requiring increased management may be subject to custodianship under the Act, compensation can still be determined by agreement, by a provision in a will (see Section 6345), by reference to a statute or by court order, without the need to so state in the Uniform Transfers to Minors Act.

§ 3916. Protection of third person from liability

Comment. Section 3916 continues Section 3916 of the repealed Probate Code without change. This section is the same as Section 16 of the Uniform Transfers to Minors Act (1986).

Because Section 3916 refers to any custodian, and "custodian" is defined to include successor custodians (subdivision (g) of Section 3901), a successor custodian appointed by the minor is included among those upon whom third persons may rely. Similarly, because Section 3916 protects any "third person," it is not necessary to specify in Section 3916 or in subdivision (c) of Section 3911 that the protection extends to any "issuer, transfer agent, bank, life insurance company, broker, or other person or financial institution," as did former Civil Code Section 1160. See the definition of "person" in Section 3901(*l*).

Section 3916 does not alter the requirements for bona fide purchaser or holder in due course status under other law for persons who acquire from a custodial property subject to recordation or registration.

Background on Section 3916 of Repealed Code

Section 3916 was added by 1984 Cal. Stat. ch. 243 § 9. For background on the provisions of this part, see the Comment to this part under the part heading.

Section 3916 carried forward, but shortened and simplified, former Civil Code Section 1160 (repealed by 1984 Cal. Stat. ch. 243 § 1), with no substantive change intended. The former section permitted a 14-year old minor to appoint a successor custodian and specifically provided that third parties were entitled to rely on the appointment. Because Section 3916 referred to any custodian, and "custodian" was defined to include successor custodians (subdivision (g) of Section 3901), a successor custodian appointed by the minor was included among those upon whom third parties may rely.

Section 3916 excluded from its protection persons with "knowledge" of the irregularity of a transaction, a concept not expressed but probably implied in former Civil Code Section 1160. See, e.g., State ex rel. Paden v. Carrel, 597 S.W.2d 167 (Mo. App. 1980), disapproving the pledge of custodial property to secure a personal loan to the custodian.

§ 3917. Liability to third persons

Comment. Section 3917 continues Section 3917 of the repealed Probate Code without change. This section is the same as Section 17 of the Uniform Transfers to Minors Act (1986) and is based upon Section 5-428 of the Uniform Probate Code (1987), relating to limitations on the liability of conservators.

Some forms of custodial property can give rise to liabilities as well as benefits (e.g., general partnership interests, interests in real estate or business proprietorships, automobiles, etc). Section 3917 is included to protect the minor and other assets the minor might have or acquire from such liabilities, since the minor is unable to disclaim a transfer to a custodian for the minor's benefit. Similar protection for the custodian is necessary so as not to discourage nonprofessional or uncompensated persons from accepting the office. Therefore, this section generally limits the claims of third parties to recourse against the custodial property, as third parties dealing with a trust are generally limited to recourse against the trust corpus.

The custodian incurs personal liability only as provided in subdivision (b) for actual fault or for failure to disclose the custodial capacity "in the contract" when contracting with third parties. In oral contracts, oral disclosure of the custodial capacity is sufficient. The minor, on the other hand, incurs personal liability under subdivision (c) only for actual fault.

When custodial property is subjected to claims of third parties under this section, the minor or the minor's legal representative, if not a party to the action by which the claim is successfully established, may seek to recover the loss from the custodian in a separate action. See Section 3919 and the Comment thereto.

Background on Section 3917 of Repealed Code

Section 3917 was a new provision added by 1984 Cal. Stat. ch. 243 § 9. For background on the provisions of this part, see the Comment to this part under the part heading. Section 3917 appears to have been consistent with prior California law concerning the tort liability of a guardian. See Campbell v. Bradbury, 179 Cal. 364, 176 P. 685 (1918). But the provision may have restricted the liability under prior law of the custodian who makes a contract in the custodial capacity. See Hall v. Jameson, 151 Cal. 606, 91 P. 518 (1907) (trustee personally liable on contract unless contract stipulates trustee not liable). But see Prob. Code § 18000 (unless contract otherwise provides, trustee not personally liable on contract properly entered into in the trustee's fiduciary capacity in the course of administration of the trust unless the trustee fails to reveal the trustee's representative capacity or identify the trust in the contract).

§ 3918. Renunciation, resignation, death, or removal of custodian; designation of successor custodian

Comment. Section 3918 continues Section 3918 of the repealed Probate Code without change. This section is the same in substance as Section 18 of the Uniform Transfers to Minors Act (1986) with the addition of subdivision (g) and the addition of provisions authorizing the transferor to designate a successor custodian. See also Section 3901(d) ("conservator" includes a guardian).

Background on Section 3918 of Repealed Code

Section 3918 was added by 1984 Cal. Stat. ch. 243 § 9 and was amended by 1985 Cal. Stat. ch. 90 § 1 and 1988 Cal. Stat. ch. 1199 § 73.5. For background on the provisions of this part, see the Comment to this part under the part heading. Section 3918 tracked but condensed former Civil Code Section 1161 (repealed by 1984 Cal. Stat. ch. 243 § 1).

Enactment of the Uniform Transfers to Minors Act broadened the category of persons the initial custodian may designate as successor custodian from an adult member of the minor's family, the guardian of the minor, or a trust company to include any adult other than the donor. However, the minor's designation remained limited to an adult member of the minor's family (expanded to include a spouse and a stepparent, see subdivision (j) of Section 3901), the guardian of the minor's estate, or a trust company. Subdivision (g) of Section 3918 continued subdivision (h) of former Civil Code Section 1161 (repealed by 1984 Cal. Stat. ch. 243 § 1). See also Sections 3905(c), 3907(c).

The 1985 amendment added provisions authorizing the transferor to designate a successor custodian. The language of the 1985 amendment was drawn in part from portions of former Civil Code Section 1161. For background on this amendment, see 18 Cal. L. Revision Comm'n Reports at 218 (1986).

The 1988 amendment substituted a reference in subdivision (a) to Part 8 of Division 2 in place of the former reference to Division 2.5, to reflect a change in the numbering of the provisions to which reference was made.

§ 3919. Accounting by and determination of liability of custodian

Comment. Section 3919 continues Section 3919 of the repealed Probate Code without change. This section is the same as Section 19 of the Uniform Transfers to Minors Act (1986) with the addition of subdivision (e). The introductory clause of subdivision (a) states the persons who may require an accounting by the custodian. Subdivision (a) also gives the same parties (other than a successor custodian) the right to seek recovery from the custodian for loss or diminution of custodial property resulting from successful claims by third persons under Section 3917, unless that issue has already been adjudicated in an action under that section to which the minor was a party.

Subdivision (b) authorizes but does not obligate a successor custodian to seek an accounting by the predecessor custodian. Since the minor and other persons mentioned in subdivision (a) may also seek an accounting

from the predecessor at any time, it is anticipated that the exercise of this right by the successor should be rare.

Property in a single custodianship may be distributable at different times, so separate accounting for custodial property (depending on the time of distribution) may be required. See the Comment to Section 3910.

Background on Section 3919 of Repealed Code

Section 3919 was added by 1984 Cal. Stat. ch. 243 § 9. The section carried forward former Civil Code Section 1162 (repealed by 1984 Cal. Stat. ch. 243 § 1), but expanded the class of parties who could require an accounting by the custodian. Subdivisions (c) and (d) continued the substance of subdivision (b) of former Civil Code Section 1162. Subdivision (e) continued the second sentence of subdivision (a) of former Civil Code Section 1162. For background on the provisions of this part, see the Comment to this part under the part heading.

§ 3920. Termination of custodianship

Comment. Section 3920 continues Section 3920 of the repealed Probate Code without change. This section is drawn from Section 20 of the Uniform Transfers to Minors Act (1986). Subdivision (a) establishes the age of termination as 18 years unless the time of transfer of custodial property to the minor is delayed under Section 3920.5.

Background on Section 3920 of Repealed Code

Section 3920 was added by 1984 Cal. Stat. ch. 243 § 9. Sections 3920 and 3920.5 superseded subdivision (d) of former Civil Code Section 1158 (repealed by 1984 Cal. Stat. ch. 243 § 1). See *Report of Senate Committee on Judiciary on Assembly Bill 2492*, 18 Cal. L. Revision Comm'n Reports 105, 111 (1986). For background on the provisions of this part, see the Comment to this part under the part heading.

§ 3920.5. Delayed time for transfer to minor; procedure

Comment. Section 3920.5 continues Section 3920.5 of the repealed Probate Code without change. There is no provision under the Uniform Transfers to Minors Act (1986) for choice as to the age at which custodial property shall be transferred to the minor. Likewise, there was no such provision under prior California law. Section 3920.5 gives this choice since many transferors who specifically authorize a custodianship wish to preserve the custodianship as long as possible. This is most likely to be the case, for example, where the custodial property is intended to be preserved and used to finance a college education. Continuing the custodianship past the age of 18 permits the donor to avoid the expense of preparing a trust instrument to create a trust that otherwise would be required in order to retain the property under custodial management until the young person reaches the specified age.

The custodian is required to transfer the property to the minor when the minor attains the age of 18 years unless the transfer pursuant to Section 3909 specifies a later time. See Section 3920.

Subdivision (c) permits the custodianship to continue until not later than the time the minor attains the age of 25 years where the transfer is made pursuant to a provision in a will or trust that provides that the custodianship is to continue until the specified age, not later than the time the beneficiary attains the age of 25. A custodianship may be established pursuant to a provision in a will or trust that provides that the custodianship is to continue until a specified age after age 18 even though the beneficiary has attained an age older than 18 but younger than the specified age at which the custodianship is to terminate. See Section 3901(k).

Subdivision (d) permits the custodianship to continue until not later than the time the minor attains the age of 25 years where the custodial property is transferred by the irrevocable exercise of a power of appointment under Section 3904 if the transfer specifies that the custodianship is to continue until the specified age.

Subdivision (e) permits the custodianship to continue until not later than the time the minor attains the age of 21 years where the custodial property is transferred by a lifetime gift. The 21-year maximum duration of the custodianship is consistent with the Internal Revenue Code which permits "minority trusts" under Section 2503(c) of the Internal Revenue Code to continue in effect until age 21.

Section 3920.5 does not provide for continuance beyond age 18 of a custodianship created under or pursuant to Sections 3412, 3413, 3602, 3611, 3906, or 3907. These custodianships terminate at age 18 because they are substitutes for a guardianship that otherwise would terminate at that time (see Section 1600). And, in the cases where Section 3920.5 permits the custodianship to continue after the minor attains the age of 18 years, if the transfer pursuant to Section 3909 does not specify any age, the custodianship terminates when the minor attains 18 years of age. See subdivision (f) of Section 3920.5.

Subdivision (g) validates a transfer that specifies a maximum time for the duration of the custodianship that is longer than permitted by Section 3920.5 by reducing the duration of the custodianship to the maximum duration permitted for a custodianship created by that type of transfer.

Because property in a single custodianship may be distributable at different times, separate accounting for custodial property by source may be required. See the Comment to Section 3910.

Background on Section 3920.5 of Repealed Code

Section 3920.5 was a new provision added by 1984 Cal. Stat. ch. 243 § 9. See *Report of Senate Committee on Judiciary on Assembly Bill 2492*, 18 Cal. L. Revision Comm'n Reports 105, 111-13 (1986). For background on the provisions of this part, see the Comment to this part under the part heading.

§ 3921. Venue

Comment. Section 3921 continues Section 3921 of the repealed Probate Code without change. No comparable provision is included in the Uniform Transfers to Minors Act (1986). Even where the custodian resides in this state, the venue is proper in any county if neither the minor, nor the transferor, nor any parent reside in this state, and no estate of a deceased or legally incapacitated custodian is being administered in this state.

Background on Section 3921 of Repealed Code

Section 3921 was added by 1984 Cal. Stat. ch. 243 § 9. The section continued and expanded the venue provision of former Civil Code Section 1162.5 (repealed by 1984 Cal. Stat. ch. 243 § 1). The former provision was liberalized to add the county where the custodian resides as a proper county, whether or not the minor resides in this state. For background on the provisions of this part, see the Comment to this part under the part heading.

§ 3922. Transfers subject to part

Comment. Section 3922 continues Section 3922 of the repealed Probate Code without change. This section is the same as Section 21 of the Uniform Transfers to Minors Act (1986). The section has two purposes. First, it operates as a "savings clause" to validate transfers made on or after January 1, 1985 (the effective date of the California Uniform Transfers to Minors Act) which mistakenly refer to the California Uniform Gifts to Minors Act rather than to the California Uniform Transfers to Minors Act. Second, it validates transfers attempted under the Uniform Gifts to Minors Act (1966) of another state which would not permit transfers from that source or of property of that kind or under the Uniform Transfers to Minors Act of another state with no nexus to the transaction, provided in each case that California has a sufficient nexus to the transaction under Section 3902.

Background on Section 3922 of Repealed Code

Section 3922 was a new provision added by 1984 Cal. Stat. ch. 243 § 9. For background on the provisions of this part, see the Comment to this part under the part heading.

§ 3923. Transfers made before January 1, 1985

Comment. Section 3923 continues Section 3923 of the repealed Probate Code without change. Subdivision (b) is the same as subsection (a) of Section 22 of the Uniform Transfers to Minors Act (1986). This subdivision attempts to validate any transfer of custodial property made before the effective date of enactment of this part of the repealed Probate Code, notwithstanding that there was no specific authority in California law for the coverage of custodial property of that kind or for a transfer from that source at the time the transfer was made. The subdivision

would, for example, validate a transfer from an intervivos trust by a trustee to a custodianship pursuant to an express provision in the trust instrument giving the trustee that authority. It was not clear under prior law that such a transfer created a valid custodianship.

Subdivision (c) is the same as subsection (b) of Section 22 of the Uniform Transfers to Minors Act (1986), except that subdivision (c) does not contain the language of Section 22(b) relating to extending the duration of custodianships in existence on the operative date. The omitted language is unnecessary because custodianships created under the California Uniform Gifts to Minors Act will still terminate at age 18 under this part. See Sections 3920, 3920.5. Subdivision (c) makes this part apply to all transfers made before January 1, 1985, in the manner and form prescribed in the California Uniform Gifts to Minors Act, except insofar as the application impairs constitutionally vested rights. This provision avoids having two bodies of law in force—one applicable to prior custodianships and the other to custodianships created under this part—for 18 more years until all custodianships created under the California Uniform Gifts to Minors Act have terminated. As to the application of any amendments made after that date, see Section 3.

Subdivision (d) is the same as the second sentence of Section 27 of the Uniform Transfers to Minors Act (1986). It preserves prior law for matters not governed by this part.

Background on Section 3923 of Repealed Code

Section 3923 was a new provision added by 1984 Cal. Stat. ch. 243 § 9. See *Report of Senate Committee on Judiciary on Assembly Bill 2492*, 18 Cal. L. Revision Comm'n Reports 105, 113 (1986). For background on the provisions of this part, see the Comment to this part under the part heading.

§ 3925. Method of transfer provided by part not exclusive

Comment. Section 3925 continues Section 3925 of the repealed Probate Code without change. No comparable provision is found in the Uniform Transfers to Minors Act (1986).

Background on Section 3925 of Repealed Code

Section 3925 was added by 1984 Cal. Stat. ch. 243 § 9. The section continued the substance of subdivision (b) of former Civil Code Section 1163 (repealed by 1984 Cal. Stat. ch. 243 § 1). For background on the provisions of this part, see the Comment to this part under the part heading.

DIVISION 5. NONPROBATE TRANSFERS

PART 1. PROVISIONS RELATING TO EFFECT OF DEATH

§ 5000. Nonprobate transfers at death

Comment. Section 5000 is a new provision that restates Section 160 of the repealed Probate Code without substantive change. Section 160 was a new provision added by 1983 Cal. Stat. ch. 842, § 22. Section 160 was enacted upon recommendation of the California Law Revision Commission. See *Tentative Recommendation Relating to Wills and Intestate Succession,* 16 Cal. L. Revision Comm'n Reports 2301, 2350-51, 2381-82 (1982). Section 5000 adopts the substance of Section 6-201 of the Uniform Probate Code (1987). As to the construction of provisions drawn from uniform acts, see Section 2.

Section 5000 differs from Section 160 of the repealed Probate Code in several respects:

(1) References to a certificated or uncertificated security, account agreement, custodial agreement, compensation plan, individual retirement plan, employee benefit plan, deed of gift, and marital property agreement have been added in Section 5000. The reference to a "marital property agreement" includes an agreement made during marriage as well as a premarital contract. The reference to profit-sharing plans is omitted for conformity with Section 6-201 of the Uniform Probate Code (1987).

(2) The examples in subdivision (b) of Section 5000 have been revised to include a separate writing executed *before* the instrument containing the written transfer provision.

(3) The phrase "or other written instrument of a similar nature" has been substituted in subdivision (a) of Section 5000 for the language "or any other written instrument effective as a contract, gift, conveyance, or trust" (which was found in the introductory portion of subdivision (a) of Section 160 of the repealed Probate Code). The Supreme Court of Washington read the replaced language to relieve against the delivery requirement of the law of deeds. See In re Estate of O'Brien, 109 Wash. 2d 913, 749 P.2d 154 (1988). The substitution of the language in subdivision (a) makes clear that Section 5000 does not have this effect. See First Nat'l Bank of Minot v. Bloom, 264 N.W.2d 208, 212 (N.D. 1978), in which the Supreme Court of North Dakota held that "nothing in . . . the Uniform Probate Code [provision] eliminates the necessity of delivery of a deed to effectuate a conveyance from one living person to another."

An instrument making a transfer under this section does not have to be executed in compliance with the formalities for a will; nor does the instrument have to be probated, nor does the personal representative have any power or duty with respect to the property transferred. See also Section 6321 (designation of trustee named or to be named in will as primary or contingent beneficiary, payee, or owner of insurance or employee benefits need not comply with the formalities for execution of a will). The Uniform Probate Code language that any provision referred to in this section is "deemed to be nontestamentary" has been replaced by the language making the provision "not invalid because the instrument does not comply with the requirements for execution of a will." This change is nonsubstantive.

The sole purpose of this section is to prevent the transfers covered by the section from being treated as testamentary. This section does not invalidate other arrangements by negative implication. Thus, this section does not affect an oral trust to hold personal property at death for named persons, an arrangement given specific recognition by Section 15207.

PART 2. MULTIPLE-PARTY ACCOUNTS

Comment. This part supersedes Part 1 (commencing with Section 5100) of Division 5 the repealed Probate Code. The superseded part was enacted upon recommendation of the California Law Revision Commission. See *Recommendation Relating to Multiple-Party Accounts in Financial Institutions,* 20 Cal. L. Revision Comm'n Reports 95 (1990). See also *Communication from the California Law Revision Commission Concerning Senate Bill 985,* 20 Cal. L. Revision Comm'n Reports 247 (1990).

For an earlier Commission recommendation which resulted in enactment of a statute covering credit unions and industrial loan companies, see *Recommendation Relating to Nonprobate Transfers,* 16 Cal. L. Revision Comm'n Reports 129 (1982). See also 17 Cal. L. Revision Comm'n Reports 823 (1984) (legislative history). For an earlier recommendation, see *Recommendation Relating to Non-Probate Transfers,* 15 Cal. L. Revision Comm'n Reports 1605 (1980). See also 16 Cal. L. Revision Comm'n Reports 2026 (1982) (legislative history).

CHAPTER 1. SHORT TITLE AND DEFINITIONS

Article 1. Short Title

§ 5100. Citation of part

Comment. Section 5100 continues Section 5100 of the repealed Probate Code without change.

Background on Section 5100 of Repealed Code

Section 5100 was a new provision added by 1983 Cal. Stat. ch. 92 § 5. For background on the provisions of this part, see the Comment to this part under the part heading.

Article 2. Definitions

§ 5120. Application of definitions

Comment. Section 5120 continues Section 5120 of the repealed Probate Code without change. Section 5120 is consistent with the introductory clause of Uniform Probate Code Section 6-101 (1987). As to the construction of provisions drawn from uniform acts, see Section 2.

Background on Section 5120 of Repealed Code

Section 5120 was added by 1989 Cal. Stat. ch. 397 § 25. The section restated without substantive change the introductory portion of former Probate Code Section 5101 (repealed by 1989 Cal. Stat. ch. 397 § 24). For background on the provisions of this part, see the Comment to this part under the part heading.

§ 5122. Account

Comment. Section 5122 continues Section 5122 of the repealed Probate Code without change. Subdivision (a) is the same in substance as subsection (1) of Section 6-101 of the Uniform Probate Code (1987). Paragraphs (1)-(3) of subdivision (b) are the same in substance as the second sentence of subsection (5) of Section 6-101 of the Uniform Probate Code (1987). As to the construction of provisions drawn from uniform acts, see Section 2.

Background on Section 5122 of Repealed Code

Section 5122 was added by 1989 Cal. Stat. ch. 397 § 25. Subdivision (a) restated subdivision (a) of former Probate Code Section 5101 (repealed by 1989 Cal. Stat. ch. 397 § 24) without change. Paragraphs (1)-(3) of subdivision (b) restated the second sentence of subdivision (e) of former Section 5101 without substantive change. Paragraph (4) of subdivision (b) was new and superseded the third sentence of subdivision (g) of former Section 5101. The new paragraph made clear that the rules applicable to an account established for funds of a guardianship, conservatorship, or decedent's estate are not affected by this part. For background on the provisions of this part, see the Comment to this part under the part heading.

§ 5124. Agent

Comment. Section 5124 continues Section 5124 of the repealed Probate Code without change. See also Section 5204 (special power of attorney with respect to accounts at financial institutions).

Background on Section 5124 of Repealed Code

Section 5124 was a new provision added by 1989 Cal. Stat. ch. 397 § 25. For background on the provisions of this part, see the Comment to this part under the part heading.

§ 5126. Beneficiary

Comment. Section 5126 continues Section 5126 of the repealed Probate Code without change. The section is the same in substance as subsection (2) of Section 6-101 of the Uniform Probate Code (1987). As to the construction of provisions drawn from uniform acts, see Section 2. See also Section 80 (defining "Totten trust account"). As used in this part, "trustee" means the trustee of a Totten trust account.

Background on Section 5126 of Repealed Code

Section 5126 was added by 1989 Cal. Stat. ch. 397 § 25. The section restated subdivision (b) of former Probate Code Section 5101 (repealed by 1989 Cal. Stat. ch. 397 § 24) without substantive change. For background on the provisions of this part, see the Comment to this part under the part heading.

§ 5128. Financial institution

Comment. Section 5128 continues Section 5128 of the repealed Probate Code without change. Subdivision (a), read with the definition of "financial institution" in Section 40, is comparable to subsection (3) of Section 6-101 of the Uniform Probate Code (1987). As to the construction of provisions drawn from uniform acts, see Section 2.

Background on Section 5128 of Repealed Code

Section 5128 was added by 1989 Cal. Stat. ch. 397 § 25. The section superseded subdivision (c) of former Probate Code Section 5101 (repealed by 1989 Cal. Stat. ch. 397 § 24). The term "financial institution" as defined in subdivision (c) of former Section 5101 was limited to credit unions and industrial loan companies. The new definition in Section 5128 applied as well to banks, savings and loan associations, and other like organizations, by force of Section 40 defining "financial institution." For background on the provisions of this part, see the Comment to this part under the part heading.

§ 5130. Joint account

Comment. Section 5130 continues Section 5130 of the repealed Probate Code without change. The section is the same in substance as subsection (4) of Section 6-101 of the Uniform Probate Code (1987). As to the construction of provisions drawn from uniform acts, see Section 2.

The definition of "joint account" embraces all of the following:

(1) *Joint account with right of survivorship.* See Sections 5301(a), 5302(a).

(2) *Joint account without right of survivorship.* This is a special type of joint account where there is clear and convincing evidence of an intent not to have survivorship. The terms of the account may include an express statement making clear that there is no survivorship right (see subdivision (a) of Section 5302) or the account may be designated as a "tenancy in common" account (see Section 5306).

(3) *Joint account held by a husband and wife with right of survivorship that cannot be changed by will.* This is a joint account held by a husband and wife that is not specifically designated in the account agreement as a "community property" account and there is no clear and convincing evidence of an intent that there be no survivorship right. The statute creates a presumption that if the parties to an account are married to each other, whether or not they are so described in the deposit agreement, their net contribution to the account is presumed to be and remain their community property. See Section 5305. The rules stated in Sections 5301(a) and 5302(a) apply to this type of joint account, including a rule that the right of survivorship of the surviving spouse cannot be changed by will. However, if the deposit agreement or the terms of the account *clearly indicates an intent that there be no survivorship right*, either spouse can designate one or more P.O.D payees (or Totten trust beneficiaries) to take that spouse's share of the account upon the death of that spouse and, absent such a designation, the share of the deceased spouse becomes a part of the estate of the deceased spouse.

(4) *Joint account held by husband and wife that is specifically designated as a "community property" account.* This is a joint account held by a husband and wife that is specifically designated in the account agreement as a "community property" account. Section 5307 provides that this type of account is governed by the rules that apply to community property generally. Accordingly, unless the parties have agreed otherwise, the right of survivorship of the surviving spouse can be changed by will (deceased spouse by will devises his or her one-half share of the account to a person other than the surviving spouse). Also, the deposit agreement or the terms of the account can include, for example, a provision that the one-half share of a spouse will pass on the death of that spouse to one or more P.O.D payees (or Totten trust beneficiaries) upon the death of that spouse. On the other hand, absent a contrary agreement or a contrary disposition, the surviving spouse will take the one-half share of the deceased spouse as community property.

Background on Section 5130 of Repealed Code

Section 5130 was added by 1989 Cal. Stat. ch. 397 § 25. The section continued subdivision (d) of former Probate Code Section 5101 (repealed by 1989 Cal. Stat. ch. 397 § 24) without change. For background on the provisions of this part, see the Comment to this part under the part heading.

§ 5132. Multiple-party account

Comment. Section 5132 continues Section 5132 of the repealed Probate Code without change. The section is the same in substance as the first sentence of subsection (5) of Section 6-101 of the Uniform

Probate Code (1987). As to the construction of provisions drawn from uniform acts, see Section 2. See also Section 5204 (special power of attorney with respect to accounts at financial institutions). As to types of joint accounts, see the Comment to Section 5130.

Background on Section 5132 of Repealed Code

Section 5132 was added by 1989 Cal. Stat. ch. 397 § 25. The section restated the first sentence of subdivision (e) of former Probate Code Section 5101 (repealed by 1989 Cal. Stat. ch. 397 § 24) without substantive change. For background on the provisions of this part, see the Comment to this part under the part heading.

§ 5134. Net contribution

Comment. Section 5134 continues Section 5134 of the repealed Probate Code without change.

Subdivision (a) is the same in substance as subsection (6) of Section 6-101 of the Uniform Probate Code (1987). As to the construction of provisions drawn from uniform acts, see Section 2. As may be seen from an examination of the provisions of this part, "net contribution" as defined in subdivision (a) has no application to the financial institution-depositor relationship. Rather, it is relevant only to controversies that may arise between parties to a multiple-party account. Subdivision (c), which is not found in the Uniform Probate Code (1987), makes this clear.

Subdivision (b) is not found in the Uniform Probate Code (1987). This subdivision provides a clear rule concerning the amount of "net contribution" in the absence of proof of a different amount.

Background on Section 5134 of Repealed Code

Section 5134 was added by 1989 Cal. Stat. ch. 397 § 25. The section restated the substance of subdivision (f) of former Probate Code Section 5101 (repealed by 1989 Cal. Stat. ch. 397 § 24) with the substitution of "whether or not included in the current balance" for the former phrase "included in the current balance" and with the addition of subdivision (c). For background on the provisions of this part, see the Comment to this part under the part heading.

§ 5136. Party

Comment. Section 5136 continues Section 5136 of the repealed Probate Code without change. This section is similar to subsection (7) of Section 6-101 of the Uniform Probate Code (1987). As to the construction of provisions drawn from uniform acts, see Section 2.

The phrase "other than as an agent" in subdivision (a) makes clear that the person named as an agent (attorney in fact under a power of attorney) is not a "party" for the purposes of this part. See Section 5124 (defining "agent"). A P.O.D. payee or a Totten trust beneficiary is a party under subdivision (a) if the payee or beneficiary has, by the terms of the account, a present right, subject to request, to payment from the account other than as an agent.

Background on Section 5136 of Repealed Code

Section 5136 was added by 1989 Cal. Stat. ch. 397 § 25. The section restated the substance of subdivision (g) of former Probate Code Section 5101 (repealed by 1989 Cal. Stat. ch. 397 § 24) with the following revisions:

(1) Section 5136 omitted the third sentence of former subdivision (g) (defining "party" to include a guardian, conservator, personal representative, or assignee, including a levying creditor, of a party). This part does not apply to an account established for the deposit of funds of the estate of a ward, conservatee, or decedent. See Section 5122(b)(4).

(2) Section 5136 omitted the portion of the last sentence of former subdivision (g) relating to "a person identified as a trustee of an account for another whether or not a beneficiary is named," this portion being unnecessary. Insofar as this language applied to the trustee of a Totten trust account, it was unnecessary in view of subdivision (a) of Section 5136 which applied to any person, including a trustee of a Totten trust, who has a present right to payment. Insofar as this language applied to a regular trust account under a testamentary trust or a trust agreement that has significance apart from the account, it was unnecessary because this statute does not apply to such a trustee. See Section 5122(b)(3). See also Section 80 (defining "Totten trust account").

(3) Section 5136 revised the remaining portion of the last sentence of former subdivision (g) to conform to the language used in subdivision (b) of Section 5136.

For background on the provisions of this part, see the Comment to this part under the part heading.

§ 5138. Payment

Comment. Section 5138 continues Section 5138 of the repealed Probate Code without change. The section is the same in substance as subsection (8) of Section 6-101 of the Uniform Probate Code (1987). As to the construction of provisions drawn from uniform acts, see Section 2.

Background on Section 5138 of Repealed Code

Section 5138 was added by 1989 Cal. Stat. ch. 397 § 25. The section continued subdivision (h) of former Probate Code Section 5101 (repealed by 1989 Cal. Stat. ch. 397 § 24) without substantive change. For background on the provisions of this part, see the Comment to this part under the part heading.

§ 5139. P.O.D.

Comment. Section 5139 continues Section 5139 of the repealed Probate Code without change. See also Sections 5140 ("P.O.D. account"), 5142 ("P.O.D. payee"). No comparable provision is found in the Uniform Probate Code (1987).

Background on Section 5139 of Repealed Code

Section 5139 was a new provision added by 1989 Cal. Stat. ch. 397 § 25. For background on the provisions of this part, see the Comment to this part under the part heading.

§ 5140. P.O.D. account

Comment. Section 5140 continues Section 5140 of the repealed Probate Code without change. The section is the same in substance as subsection (10) of Section 6-101 of the Uniform Probate Code (1987).

As to the construction of provisions drawn from uniform acts, see Section 2.

Background on Section 5140 of Repealed Code

Section 5140 was added by 1989 Cal. Stat. ch. 397 § 25. The section continued subdivision (i) of former Probate Code Section 5101 (repealed by 1989 Cal. Stat. ch. 397 § 24) without substantive change. For background on the provisions of this part, see the Comment to this part under the part heading.

§ 5142. P.O.D. payee

Comment. Section 5142 continues Section 5142 of the repealed Probate Code without change. The section is the same as subsection (11) of Section 6-101 of the Uniform Probate Code (1987). As to the construction of provisions drawn from uniform acts, see Section 2.

Background on Section 5142 of Repealed Code

Section 5142 was added by 1989 Cal. Stat. ch. 397 § 25. The section continued subdivision (j) of former Probate Code Section 5101 (repealed by 1989 Cal. Stat. ch. 397 § 24) without change. For background on the provisions of this part, see the Comment to this part under the part heading.

§ 5144. Proof of death

Comment. Section 5144 continues Section 5144 of the repealed Probate Code without change. The section is consistent with subsection (9) of Section 6-101 of the Uniform Probate Code (1987). As to the construction of provisions drawn from uniform acts, see Section 2.

Background on Section 5144 of Repealed Code

Section 5144 was added by 1989 Cal. Stat. ch. 397 § 25. The section continued subdivision (k) of former Probate Code Section 5101 (repealed by 1989 Cal. Stat. ch. 397 § 24) without substantive change. For background on the provisions of this part, see the Comment to this part under the part heading.

§ 5146. Receives

Comment. Section 5146 continues Section 5146 of the repealed Probate Code without change. No comparable provision is found in the Uniform Probate Code (1987).

Background on Section 5146 of Repealed Code

Section 5146 was added by 1989 Cal. Stat. ch. 397 § 25. The section continued subdivision (*l*) of former Probate Code Section 5101 (repealed by 1989 Cal. Stat. ch. 397 § 24) with the addition of the introductory clause to make clear that the terms of the account or deposit agreement may expressly provide when an order or notice is "received." For background on the provisions of this part, see the Comment to this part under the part heading.

§ 5148. Request

Comment. Section 5148 continues Section 5148 of the repealed Probate Code without change. The section is the same in substance as subsection (12) of Section 6-101 of the Uniform Probate Code (1987). As to the construction of provisions drawn from uniform acts, see

Section 2. Various signature requirements may be involved in order to meet the withdrawal requirements of the account. A "request" involves compliance with these requirements. A "party" is one (other than an agent) to whom an account is presently payable without regard for whose signature may be required for a "request." See Section 5136.

Background on Section 5148 of Repealed Code

Section 5148 was added by 1989 Cal. Stat. ch. 397 § 25. The section restated subdivision (m) of former Probate Code Section 5101 (repealed by 1989 Cal. Stat. ch. 397 § 24) without substantive change. For background on the provisions of this part, see the Comment to this part under the part heading.

§ 5150. Sums on deposit

Comment. Section 5150 continues Section 5150 of the repealed Probate Code without change. The section is the same in substance as subsection (13) of Section 6-101 of the Uniform Probate Code (1987). As to the construction of provisions drawn from uniform acts, see Section 2.

Background on Section 5150 of Repealed Code

Section 5150 was added by 1989 Cal. Stat. ch. 397 § 25. The section continued subdivision (n) of former Probate Code Section 5101 (repealed by 1989 Cal. Stat. ch. 397 § 24) without substantive change. The language "whether or not included in the current balance" was added to cover the situation where interest or dividends have been earned but have not yet been credited to the account. For background on the provisions of this part, see the Comment to this part under the part heading.

§ 5152. Withdrawal

Comment. Section 5152 continues Section 5152 of the repealed Probate Code without change. See Section 5124 (defining "agent"). See also Section 5204 (special power of attorney with respect to accounts at financial institutions). Section 5152 is the same in substance as subsection (15) of Section 6-101 of the Uniform Probate Code (1987), except that the UPC provision does not include the reference to payment to "an agent." As to the construction of provisions drawn from uniform acts, see Section 2.

Background on Section 5152 of Repealed Code

Section 5152 was added by 1989 Cal. Stat. ch. 397 § 25. The section continued subdivision (p) of former Probate Code Section 5101 (repealed by 1989 Cal. Stat. ch. 397 § 24) with the addition of the reference to payment to "an agent." For background on the provisions of this part, see the Comment to this part under the part heading.

CHAPTER 2. GENERAL PROVISIONS

§ 5201. Governing provisions

Comment. Section 5201 continues Section 5201 of the repealed Probate Code without change. The section is the same in substance as Section 6-102 of the Uniform Probate Code (1987). As to the

construction of provisions drawn from uniform acts, see Section 2. Nothing in this part affects set off rights of financial institutions. See generally Kruger v. Wells Fargo Bank, 11 Cal. 3d 352, 357, 521 P.2d 441, 113 Cal. Rptr. 449 (1974) (right of setoff is "based upon general principles of equity").

Background on Section 5201 of Repealed Code

Section 5201 was added by 1983 Cal. Stat. ch. 92 § 5. For background on the provisions of this part, see the Comment to this part under the part heading.

§ 5202. Transfer in fraud of creditors

Comment. Section 5202 continues Section 5202 of the repealed Probate Code without change. No comparable provision is found in the Uniform Probate Code (1987).

Background on Section 5202 of Repealed Code

Section 5202 was added by 1983 Cal. Stat. ch. 92 § 5. For background on the provisions of this part, see the Comment to this part under the part heading.

§ 5203. Creation of multiple-party relationship

Comment. Section 5203 continues Section 5203 of the repealed Probate Code without change. The section provides form language for multiple-party accounts, but does not require use of the form language. Accordingly, the account agreement for existing accounts need not be changed to conform to the form language provided in this section. Also, accounts may be established after this section becomes operative using forms that were used under the law in effect before this section was enacted. For the form language to establish a special power of attorney for account transactions, see Section 5204(c). Section 5203 is drawn in part from a Wisconsin statute. See Wis. Stat. Ann. § 705.02 (West 1981 & Supp. 1988).

A contract of deposit that does not use the form language for a particular kind of account is nevertheless governed by this part if the contract of deposit provides for substantially the same relationship between the parties. For example, an account held by two persons as "joint tenants with right of survivorship" is treated as a joint account under this part. Likewise, an account payable on request to one or more of two or more parties is treated as a joint account under this part even though no mention is made of any right of survivorship unless the terms of the account or deposit agreement otherwise provide. See Section 5130 ("joint account" defined). An account treated as a joint account belongs to the parties in proportion to their net contributions and passes to the survivors unless there is clear and convincing evidence of a different intent. See Sections 5301 (ownership during lifetime), 5302 (right of survivorship). But see Sections 5306 (tenancy in common accounts),

5307 (account expressly described as "community property" account).

A party to a "tenancy in common" account can designate a P.O.D. beneficiary to receive that tenant's share of the account upon the tenant's death, and the provisions of this part are applicable with respect to the P.O.D. designation. Likewise, although the rights during lifetime and upon death of the parties to an account expressly described as a "community property" account are governed by the law applicable to community property generally, either spouse on the "community property" account can designate a P.O.D beneficiary to receive that spouse's one-half share of the account upon the death of that spouse, and the provisions of this part are applicable with respect to the P.O.D. designation. See also the discussion in the Comment to Section 5130.

Section 5203 does not provide form language for a Totten trust account (as defined in Section 80), since the P.O.D. account serves the same function. However, a Totten trust account is authorized and is governed by the provisions of this part that apply to Totten trust accounts.

Background on Section 5203 of Repealed Code

Section 5203 was added by 1989 Cal. Stat. ch. 397 § 26. For background on the provisions of this part, see the Comment to this part under the part heading.

§ 5204. Special power of attorney for account transactions

Comment. Section 5204 continues Section 5204 of the repealed Probate Code without substantive change. Naming a person as agent—technically giving the person named as agent a power of attorney with respect to account transactions—is commonly used for convenience and permits the agent to make withdrawals from the account. Even though the account is presently payable to the agent, the account belongs to the parties to the account, and the power of attorney gives the agent no ownership or survivorship right in the account.

Background on Section 5204 of Repealed Code

Section 5204 was a new provision added by 1989 Cal. Stat. ch. 397 § 27. For background on the provisions of this part, see the Comment to this part under the part heading.

§ 5205. Application of part

Comment. Section 5205 is a new provision that continues the substance of 1989 Cal. Stat. ch. 397, § 41.

CHAPTER 3. OWNERSHIP BETWEEN PARTIES AND THEIR CREDITORS AND SUCCESSORS

§ 5301. Ownership during lifetime

Comment. Section 5301 continues Section 5301 of the repealed Probate Code without substantive change. Section 5301 is the same in substance as Section 6-103 of the Uniform Probate Code (1987). As to

the construction of provisions drawn from uniform acts, see Section 2. The presumption under subdivision (a) that an account belongs to the parties during their lifetimes in proportion to the net contributions by each changed the rule under former law. Under former law, if the joint account provided for rights of survivorship, the account was presumed to be a joint tenancy and each joint tenant was presumed to have an equal interest in the account. Wallace v. Riley, 23 Cal. App. 2d 654, 667, 74 P.2d 807 (1937).

Where there are several parties to an account and the account is one where there is no survivorship right among the parties (as where the terms of the account specifically provide that there is no survivorship right among the parties or the account is expressly designated as a "tenancy in common" account), any party may designate a P.O.D. payee (or Totten trust beneficiary) to take that party's share of the account upon the death of that party. The language "unless there is clear and convincing evidence of a different intent" in subdivisions (b) and (c) makes this clear. See also Sections 5305 (presumption that sum on deposit in joint account of married persons is community property), 5307 (account expressly described as "community property" account).

A party to a "community property" account may designate a P.O.D. payee to take that spouse's one-half interest in the account when that spouse dies. Under Section 5301, unless there is clear and convincing evidence of a different intent, the P.O.D. payee has no rights to the sums on deposit during the lifetime of the spouse naming the P.O.D. beneficiary.

Background on Section 5301 of Repealed Code

Section 5301 was added by 1983 Cal. Stat. ch. 92 § 5 and was amended by 1989 Cal. Stat. ch. 397 § 28. The 1989 amendment made no substantive change; it merely simplified the language of the section. For background on the provisions of this part, see the Comment to this part under the part heading.

§ 5302. Right of survivorship

Comment. Section 5302 continues Section 5302 of the repealed Probate Code without change. The section is the same in substance as Section 6-104 of the Uniform Probate Code (1987), except that Section 5302 omits the UPC requirement that the intent that there be no rights of survivorship exist "at the time the account is created." Thus, under Section 5302, the intention to negate survivorship may be shown to have existed after the time of creation of the account, although the evidence must be clear and convincing. This is consistent with the rule under subdivision (a) of Section 5303 that rights of survivorship are determined by the form of the account at the death of a party. Under Section 5303, a party having the right of withdrawal can eliminate survivorship rights, for

example, by closing out the account having the survivorship rights and opening a new account without survivorship rights. See the Comment to Section 5303. As to the construction of provisions drawn from uniform acts, see Section 2.

Subdivision (a) creates a right of survivorship in a joint account whether or not the account is described as a "joint tenancy" or mentions any right of survivorship. See Section 5130. The right of survivorship created by subdivision (a) may be rebutted by clear and convincing evidence of a different intent. This strengthens survivorship rights, since under prior law the presumption of survivorship arising from the joint tenancy form of the account could be overcome by a preponderance of the evidence. See Schmedding v. Schmedding, 240 Cal. App. 2d 312, 315-16, 49 Cal. Rptr. 523 (1966) (presumption rebuttable); Evid. Code § 115 (except as otherwise provided by law, burden of proof requires preponderance of evidence); Comment to Evid. Code § 606 (ordinarily party against whom a rebuttable presumption operates must overcome the presumption by a preponderance of the evidence). To rebut the right of survivorship where no right of survivorship is desired, the parties to a joint account may, for example, establish a "JOINT ACCOUNT—NO SURVIVORSHIP."

Rights of survivorship are determined by the form of the account at the death of a party. See subdivision (a) of Section 5303. Under that subdivision, a party having the right of withdrawal can eliminate survivorship rights, for example, by closing out the account having the survivorship rights and opening a new account without survivorship rights. See the Comment to Section 5303.

Paragraph (2)(B) of subdivision (b), and paragraph (2)(B) of subdivision (c), are clarifying provisions not found in the Uniform Probate Code (1987). These provisions are drawn from the law of Maine. See Me. Rev. Stat. Ann. tit. 18-A, § 6-104 (West 1981).

Community funds may be deposited in an account held jointly by one of the spouses and a third person, with the other spouse not being a party to the account. Also community funds may be deposited in an account by one spouse as a trustee for a beneficiary who is not the other spouse or in a P.O.D. account where the P.O.D. payee is not the other spouse. In any of these cases, upon the death of the spouse who is a party to the account, the non-party spouse may recover his or her half interest in the community funds in preference to the survivorship rights of the third person. See Section 100. See also Section 6101 (formerly Section 201); Mazman v. Brown, 12 Cal. App. 2d 272, 55 P.2d 539 (1936) (Former Probate Code Section 201 applied to nonprobate transfers with testamentary effect such as life insurance).

Even though the funds in a multiple-party account may be community funds under Section 5305, the financial institution may rely on the form of the account as a joint account, P.O.D. account, or Totten trust account and may make payment pursuant to Chapter 4 (commencing with Section 5401), and is protected from liability in so doing. See Section 5405. The nature of the property rights in such funds is to be determined among the competing claimants, and the financial institution has no interest in this controversy. See Section 5201.

Subdivision (c) codifies the judicially-recognized rule that, in the case of a tentative or "Totten" trust, the sums on deposit vest in the designated beneficiary on the death of the trustee. See 7 B. Witkin, Summary of California Law *Trusts* § 17, at 5379 (8th ed. 1974). However, subdivision (c) strengthens the rights of the beneficiary by permitting the trust to be attacked only by "clear and convincing" evidence that survivorship was not intended. Under prior California law, a tentative or "Totten" trust could be defeated by circumstantial and often flimsy evidence, making its use unreliable. Id. § 18, at 5380-82.

The rule stated in subdivision (d) applies to an account where there is clear and convincing evidence of an intent not to have a right of survivorship and the decedent has not designated a P.O.D. payee, such as a case where the terms of the account expressly provide that there is no right of survivorship or where the account is expressly described in the deposit agreement as a "tenancy in common" account (Section 5306). In a case where the rule stated in subdivision (d) applies, only the decedent's interest in the account becomes a part of the decedent's estate. A party to a "tenancy in common" account may, of course, designate a P.O.D. payee for the party's interest in the account, in which case upon the party's death the party's interest in the account is paid to the P.O.D. payee rather than to the party's estate. In the case of an account expressly designated in the deposit agreement as a "community property" account, either spouse may designate a P.O.D. payee for that spouse's interest, thereby making clear that the other spouse has no survivorship right to that interest, or may provide expressly in the deposit agreement that there is no survivorship right or may make a disposition of the interest in his or her will, in which case the rule in subdivision (d) applies.

Subdivision (e) changes the rule applicable to a tentative or "Totten" trust under prior California law by preventing revocation or modification of the trust by will. See Brucks v. Home Fed. Sav. & Loan Ass'n, 36 Cal. 2d 845, 852-53, 228 P.2d 545 (1951) (testamentary plan wholly inconsistent with terms of tentative trust revokes the trust).

Nothing in Section 5302 prevents the court, for example, from

enforcing a promise by the surviving beneficiary to share the account funds with someone else. Cf. Jarkieh v. Badagliacco, 75 Cal. App. 2d 505, 170 P.2d 994 (1946).

Background on Section 5302 of Repealed Code

Section 5302 was added by 1983 Cal. Stat. ch. 92 § 5 and was amended by 1989 Cal. Stat. ch. 397 § 29. The 1989 amendment made technical, nonsubstantive revisions to conform to language used in other provisions of this part. For background on the provisions of this part, see the Comment to this part under the part heading.

§ 5303. Rights of survivorship determined by form of account at time of death; methods for change of terms of account

Comment. Section 5303 continues Section 5303 of the repealed Probate Code without change.

Subdivision (a) is the same as the first sentence of Section 6-105 of the Uniform Probate Code (1987). As to the construction of provisions drawn from uniform acts, see Section 2.

Subdivision (b) is substituted for the remainder of the Uniform Probate Code section and is drawn from Georgia law. See Ga. Code Ann. § 7-1-814 (1989). Paragraph (3) of subdivision (b) permits a change in the terms of a multiple-party account by complying with a method of modification provided in the terms of the account or deposit agreement. Accordingly, for example, if the terms of the account or deposit agreement permit a party to the account to change a P.O.D. beneficiary or to substitute a new party to a joint account for an original party to the account, the change would be effective to give the right of survivorship to the new beneficiary or new party to the joint account. The requirement of paragraph (1) that the account be closed and reopened under different terms would not apply where the modification is made under paragraph (2) or (3) of subdivision (b).

Under subdivision (a), rights of survivorship are determined by the form of the account at the death of a party. Subdivision (c) makes clear that the terms of the account that can be changed include terms relating to rights of survivorship. For example, under subdivision (b), a party having the right of withdrawal can eliminate survivorship rights by closing out the account having the survivorship rights and opening a new account without survivorship rights. Withdrawal of the funds from the account will not, however, change the other rights of the parties to the moneys withdrawn. See Sections 5301 (ownership during lifetime), 5305 (presumption of community property). See also the Comment to Section 5305.

Merely changing the terms of the account to eliminate survivorship rights does not affect the right of the financial institution to make

payments in accordance with the terms of the account in effect at the time payment is made. See also Section 5405.

Section 5303 does not affect the presumption established by Section 5305 (funds of married persons who are parties to joint account presumed to be community property). See also Section 5405 (notice to financial institution from party that withdrawals should not be permitted).

Background on Section 5303 of Repealed Code

Section 5303 was added by 1983 Cal. Stat. ch. 92 § 5 and amended by 1984 Cal. Stat. ch. 452 § 7 and 1989 Cal. Stat. ch. 397 § 30. The 1984 amendment added subdivision (b)(4). The 1989 amendment added subdivision (c), a clarifying, nonsubstantive provision. For background on the provisions of this part, see the Comment to this part under the part heading.

§ 5304. Testamentary effect of statutory survivorship provisions

Comment. Section 5304 continues Section 5304 of the repealed Probate Code without change. The first sentence is the same as the first portion of Section 6-106 of the Uniform Probate Code (1987). As to the construction of provisions drawn from uniform acts, see Section 2. The remainder of the Uniform Probate Code section is omitted. The second sentence of Section 5304 is comparable to New Jersey law. See N.J. Stat. Ann. § 17:16I-14 (West 1984). The purpose of Section 5304 is to make clear that the effectiveness of transfers under this part is not to be determined by the requirements for a will.

A transfer under this part is effective by reason of the provisions of this part and the terms of the account or deposit agreement. This transfer avoids the need for a probate proceeding to accomplish a transfer. However, the transfer does not affect rights otherwise provided by law. Also, for example, Section 5304 has no effect on a surviving spouse's right to his or her share of community funds deposited in a multiple-party account under which a third person has a survivorship right upon the death of the other spouse. See the Comment to Section 5302.

Background on Section 5304 of Repealed Code

Section 5304 was added by 1983 Cal. Stat. ch. 92 § 5. The section was drawn from portions of then-existing Financial Code Sections 852.5, 7604.5, 11203.5, 14854.5, and 18318.5 (pay-on-death transfers nontestamentary). For background on the provisions of this part, see the Comment to this part under the part heading.

§ 5305. Presumption that sums on deposit are community property

Comment. Section 5305 continues Section 5305 of the repealed Probate Code without change. There is no comparable provision in the Uniform Probate Code (1987).

Section 5305 applies to "accounts" (defined in Section 5122), not just "multiple-party accounts" (defined in Section 5132). Thus, the

presumption of community property applies, for example, to a husband and wife who have funds on deposit in a partnership account.

Section 5305 does not affect or limit the right of the financial institution to make payments pursuant to Sections 5401-5407 and the deposit agreement. See Section 5201. For this reason, Section 5305 does not affect the definiteness and certainty that the financial institution must have in order to be induced to make payments from the account and, at the same time, the section preserves the rights of the parties, creditors, and successors that arise out of the nature of the funds—community or separate—in the account.

The presumption created by Section 5305 is one affecting the burden of proof. See also Evid. Code § 606 ("The effect of a presumption affecting the burden of proof is to impose upon the party against whom it operates the burden of proof as to the nonexistence of the presumed fact"). This requires proof that the funds of married persons in a joint account are not community property. Subdivision (b) of Section 5305 specifies the proof that must be made to rebut the presumption that the property is community property.

The introductory clause of subdivision (b) makes clear that the rule stated in subdivision (b) prevails over the rules stated in Civil Code Sections 4800.1 and 4800.2 with respect to the division of a joint account upon dissolution of marriage or legal separation as well as for all other purposes. Compare Section 5307 (account expressly described as "community property" account).

Paragraph (1) of subdivision (b) specifies one of the two methods of rebutting the presumption—the source-of-funds or tracing rule. If the person having the burden of proof can trace separate funds into a joint account, the presumption of community property is overcome and the funds retain their separate character. If separate funds have been commingled with community funds but remain ascertainable or traceable into a proportionate share of the account, the funds retain their separate character. On the other hand, if separate and community funds are so commingled that the party having the burden of proving that the funds are separate cannot meet that burden, then the entire account is treated as community property. See generally 7 B. Witkin, Summary of California Law *Community Property* §§ 33-34, at 5126-28 (8th ed. 1974). Even though the separate funds can still be traced, nothing prevents the married persons from making an agreement that expresses their clear intent that the funds be community property. If the person claiming that such an agreement was made proves that fact by a preponderance of the evidence, the agreement is given effect as provided in the last clause of paragraph (1).

Paragraph (2) of subdivision (b) specifies the other method by which the presumption may be rebutted: The spouses may expressly agree that the sums on deposit are not community property. But lay persons often do not understand the detailed provisions of the deposit agreement, and those provisions may not reflect the intent of the spouses as to the character of the property in the joint account. For this reason, paragraph (2) provides that the character of the property as community property is not changed unless there is an agreement—*separate from the deposit agreement*—expressly providing, for example, that the sums on deposit are not community property or that such sums are the separate property of one or both of the spouses. This scheme gives the spouses the necessary flexibility to change the character of the property where that is their intention but, at the same time, protects the spouses against unintentionally changing community property into separate property merely by signing a deposit agreement that would have that unintended effect.

The presumption created by Section 5305 does not affect the provisions of Sections 5302, 5402, and 5405 that permit prompt payment of the sums on deposit in a joint account to the surviving spouse. The prompt payment provisions are most useful where the estate is small and payment to the surviving spouse will avoid the expense and delay of probate. Yet, because the presumption created by Section 5305 governs the rights between the spouses and their successors, claimants who wish to show that the funds are community funds will find it easier to do so.

During the lifetimes of the married persons, the terms of the contract of deposit may be changed as provided in Section 5303 to eliminate or to add rights of survivorship. If there is a survivorship right in the surviving spouse at the time of the other spouse's death, the surviving spouse takes the share of the deceased spouse in the joint account by right of survivorship. See subdivision (c) of Section 5305. If there is no survivorship right in the surviving spouse at the time of the other spouse's death and the joint account consists of community property, the will of the deceased spouse may dispose of the deceased spouse's share of the account. See also Section 5307 (account expressly described in account agreement as a "community property" account is governed by law governing community property generally).

If a spouse has the unilateral right to withdraw funds from the joint account, that spouse may terminate all rights of survivorship by withdrawing the funds from the account and depositing them in another account that does not give the spouses rights of survivorship. Either spouse could then dispose of his or her share of the funds in the new

account by will. One spouse may not, however, deprive the other spouse of community property rights by unilateral action with respect to funds in a joint account created with community property funds. For example, if a spouse withdraws community property funds from a joint account and deposits the funds withdrawn in an account in his or her name, this does not change the community property interest of the other spouse in the funds so deposited. See subdivision (d). See also Section 5307 (account expressly described in account agreement as a "community property" account is governed by law governing community property generally).

Likewise, for example, if the funds in a joint account of a married couple have their source in the separate property of the wife, the husband can eliminate survivorship rights by closing out the account and opening another account in his own name, but absent an agreement of the husband and wife this would not change the ownership interest of the wife in the funds withdrawn. See Section 5301 (joint account belongs, during the lifetime of all parties, to the parties in proportion to the net contributions of each to the sums on deposit, unless there is clear and convincing evidence of a different intent).

Community property funds on deposit in a multiple-party account are not subject to testamentary disposition by the deceased depositor. See subdivision (c). This is consistent with the general Uniform Probate Code rule stated in subdivision (e) of Section 5302. If a right to dispose of community property in a multiple-party account by will is desired to be retained, that objective can be accomplished by the two spouses establishing a joint account with the express provision that no right of survivorship arises upon the death of one of the spouses.

Background on Section 5305 of Repealed Code

Section 5305 was added by 1983 Cal. Stat. ch. 92 § 5 and amended by 1989 Cal. Stat. ch. 397 § 31. The 1989 amendment made the following revisions:

(1) References to Civil Code Sections 4800.1 and 4800.2 were added to the introductory clause of subdivision (b).

(2) Paragraph (1) of subdivision (b) was revised to require that the community property agreement be in writing. This is consistent with paragraph (2) of subdivision (b) and with Civil Code Section 5110.730.

With respect to the spouses and those claiming under them, Section 5305 reversed the presumption under former law that community funds deposited into a joint account with right of survivorship are presumed to be converted into true joint tenancy funds and to lose their character as community property. See In re Estate of McCoin, 9 Cal. App. 2d 480, 50 P.2d 114 (1935). See also Griffith, *Community Property in Joint Tenancy Form*, 14 Stan. L. Rev. 87, 91-93 (1961). The former presumption was inconsistent with the general belief of married persons. Married persons generally believe that community funds deposited in a joint tenancy account remain community property. See Griffith, supra at 90, 95, 106-109. The presumption created by Section 5305 is consistent with this general belief.

For background on the provisions of this part, see the Comment to this part under the part heading.

§ 5306. Account expressly described as "tenancy in common" account

Comment. Section 5306 continues Section 5306 of the repealed Probate Code without change. There is no comparable provision in the Uniform Probate Code (1987). The purpose of Section 5306 is to preserve the effect of a tenancy in common account. A right of survivorship may exist in a "tenancy in common" account, for example, where a party to the account designates a P.O.D. beneficiary to receive that tenant's share of the account upon the tenant's death.

Background on Section 5306 of Repealed Code

Section 5306 was added by 1983 Cal. Stat. ch. 92 § 5 and amended by 1989 Cal. Stat. ch. 397 § 32. The 1989 amendment made the section applicable to all tenancy in common accounts, whenever established, and added an exception where the terms of the account or deposit agreement expressly provide for survivorship. For background on the provisions of this part, see the Comment to this part under the part heading.

§ 5307. Account expressly described as "community property" account

Comment. Section 5307 continues Section 5307 of the repealed Probate Code without change. The section deals with the situation where a joint account held by a husband and wife is specifically designated in the account agreement as a "community property" account. Section 5307 makes clear that this type of account is governed by the rules that apply to community property generally. Accordingly, unless the parties have agreed otherwise, the right of survivorship of the surviving spouse can be changed by will (deceased spouse by will devises his or her one-half share of the account to a person other than the surviving spouse). Also, the deposit agreement or the terms of the account can include, for example, a provision that the one-half share of a spouse will pass on the death of that spouse to one or more P.O.D payees (or Totten trust beneficiaries) upon the death of that spouse. On the other hand, absent a contrary agreement or a contrary disposition, the surviving spouse will take the one-half share of the deceased spouse as community property.

Background on Section 5307 of Repealed Code

Section 5307 was a new provision added by 1989 Cal. Stat. ch. 397 § 33. For background on the provisions of this part, see the Comment to this part under the part heading.

CHAPTER 4. PROTECTION OF FINANCIAL INSTITUTION

§ 5401. Multiple-party accounts; terms; requirements

Comment. Section 5401 continues Section 5401 of the repealed Probate Code without change. Subdivision (a) is the same as the first two sentences of Section 6-108 of the Uniform Probate Code (1987) with the addition of the clarifying phrase "and according to its terms." Paragraph (1) of subdivision (c) is the same in substance as the last sentence of Section 6-108 of the Uniform Probate Code (1987). As to the construction of provisions drawn from uniform acts, see Section 2.

Background on Section 5401 of Repealed Code

Section 5401 was added by 1983 Cal. Stat. ch. 92 § 5 and was amended by 1989 Cal. Stat. ch. 397 § 34. Subdivision (a) was a new provision. Subdivision (b) was drawn from portions of then-existing Financial Code Sections 852, 7603, 11204, and 14854 (second sentence). The 1989 amendment added the reference to agents in subdivision (a). See Section 5124 (defining "agent"). See also Section 5204 (special power of attorney with respect to accounts at financial institutions). The 1989 amendment also added paragraphs (2) and (3) to subdivision (c) and added subdivision (d). For background on the provisions of this part, see the Comment to this part under the part heading.

§ 5402. Payment of joint account

Comment. Section 5402 continues Section 5402 of the repealed Probate Code without change. The section is the same in substance as Section 6-109 of the Uniform Probate Code (1987). As to the construction of provisions drawn from uniform acts, see Section 2.

Background on Section 5402 of Repealed Code

Section 5402 was a new provision added by 1983 Cal. Stat. ch. 92 § 5. For background on the provisions of this part, see the Comment to this part under the part heading.

§ 5403. Payment of P.O.D. account

Comment. Section 5403 continues Section 5403 of the repealed Probate Code without change. The section is the same in substance as Section 6-110 of the Uniform Probate Code (1987). As to the construction of provisions drawn from uniform acts, see Section 2.

Background on Section 5403 of Repealed Code

Section 5403 was a new provision added by 1983 Cal. Stat. ch. 92 § 5. For background on the provisions of this part, see the Comment to this part under the part heading.

§ 5404. Payment of Totten trust account

Comment. Section 5404 continues Section 5404 of the repealed Probate Code without change. The section is the same in substance as Section 6-111 of the Uniform Probate Code (1987). As to the construction of provisions drawn from uniform acts, see Section 2.

Background on Section 5404 of Repealed Code

Section 5404 was a new provision added by 1983 Cal. Stat. ch. 92 § 5 and amended by 1989 Cal. Stat. ch. 397 § 35. The 1989 amendment substituted "Totten trust account" in place of "trust account." See Section 80 (defining "Totten trust account"). For background on the provisions of this part, see the Comment to this part under the part heading.

§ 5405. Payment as discharge; refusal to pay upon receipt of notice

Comment. Section 5405 continues Section 5405 of the repealed Probate Code without change. The section is drawn in part from Section 6-112 of the Uniform Probate Code (1987). Subdivision (a) is the same in substance as a portion of the Uniform Probate Code section. Subdivision (b) is substituted for the comparable portion of the Uniform Probate Code section. Subdivision (d) is the same in substance as the comparable portion of the Uniform Probate Code section. Receipt of notice under this section must be at the particular office or branch office where the account is carried unless the terms of the account or deposit agreement expressly provide otherwise. See Section 5146. As to the construction of provisions drawn from uniform acts, see Section 2.

Background on Section 5405 of Repealed Code

Section 5405 was added by 1983 Cal. Stat. ch. 92 § 5 and amended by 1984 Cal. Stat. ch. 452 § 8. Subdivision (a) was new. Subdivision (b) was drawn from then-existing Financial Code Sections 852.5, 7604.5, 11203.5, 14854.5, and 18318.5 relating to service of a court order restraining payment. Subdivision (c) was drawn from portions of Financial Code Sections 852 and 7603. Subdivision (d) was new. The 1984 amendment rewrote subdivision (c). For background on the provisions of this part, see the Comment to this part under the part heading.

§ 5406. Payment of account held in trust form where financial institution has no notice that account is not a "Totten trust account"

Comment. Section 5406 continues Section 5406 of the repealed Probate Code without change. The section permits a financial institution to treat an account in trust form as a Totten trust account (defined in Section 80) if it is unknown to the financial institution that the funds on deposit are subject to a trust created other than by the deposit of the funds in the account in trust form. If the financial institution does not have the additional information, the financial institution is protected from liability if it pays the account as provided in this chapter. See Section 5405. However, Section 5406 does not affect the rights as between the parties to the account, the beneficiary, or their successors. See Sections 5201, 5301(c), 5302(c).

Background on Section 5406 of Repealed Code

Section 5406 was added by 1983 Cal. Stat. ch. 92 § 5 and was amended by 1989 Cal. Stat. ch. 397 § 36. The section was drawn from a portion of Financial Code

Section 853. The 1989 amendment substituted a reference to Section 80 (defining "Totten trust account") in place of the former reference to Section 5101. The 1989 amendment also required the notice that the account is not a Totten trust account to be in writing. This was consistent with a requirement also found in Financial Code Sections 853 and 6853. For background on the provisions of this part, see the Comment to this part under the part heading.

§ 5407. Payment to minor

Comment. Section 5407 continues Section 5407 of the repealed Probate Code without change. Under the Uniform Transfers to Minors Act, if there has been no nomination of a custodian, $10,000 or less may be transferred to an adult member of the minor's family or to a trust company without the need for a court order. See Section 3907. In addition, the court may order that all or part of the money be paid to a custodian under the Uniform Act for the benefit of the minor. See Section 3413.

Background on Section 5407 of Repealed Code

Section 5407 was added by 1983 Cal. Stat. ch. 92 § 5 and amended by 1989 Cal. Stat. ch. 397 § 37. Subdivision (a) was consistent with Section 850 of the Financial Code. Subdivision (b) was new. The 1989 amendment authorized payment pursuant to the Uniform Transfers to Minors Act. For background on the provisions of this part, see the Comment to this part under the part heading.

DIVISION 6. WILLS AND INTESTATE SUCCESSION

PART 1. WILLS

Comment. This part supersedes Part 1 (commencing with Section 6100) of Division 6 the repealed Probate Code. The superseded part was enacted upon recommendation of the California Law Revision Commission. See *Tentative Recommendation Relating to Wills and Intestate Succession,* 16 Cal. L. Revision Comm'n Reports 2301 (1982). See also *Report of Senate Committee on Judiciary on Assembly Bills 25 and 68,* 17 Cal. L. Revision Comm'n Reports 867, 870-79 (1984).

CHAPTER 1. GENERAL PROVISIONS

§ 6100. Persons who may make a will

Comment. Section 6100 continues Section 6100 of the repealed Probate Code without change. This section is the same in substance as Section 2-501 of the Uniform Probate Code (1987). An emancipated minor is considered as being over the age of majority for the purpose of making or revoking a will. See Civil Code § 63. As to persons not mentally competent to make a will, see Section 6100.5. Section 6100 does not apply if the testator before January 1, 1985. See Section 6103. As to the application of any amendments made after that date, see Section 3.

Background on Section 6100 of Repealed Code

Section 6100 was added by 1983 Cal. Stat. ch. 842 § 55. The section continued the substance of a portion of the first sentence of former Probate Code Section 20 (repealed by 1983 Cal. Stat. ch. 842 § 18) and a portion of former Probate Code Section 21 (repealed by 1983 Cal. Stat. ch. 842 § 18). For background on the provisions of this part, see the Comment to this part under the part heading.

§ 6100.5. Persons not mentally competent to make a will

Comment. Section 6100.5 continues Section 6100.5 of the repealed Probate Code without substantive change.

Background on Section 6100.5 of Repealed Code

Section 6100.5 was a new provision added by 1985 Cal. Stat. ch. 940 § 1.

§ 6101. Property which may be disposed of by will

Comment. Section 6101 continues Section 6101 of the repealed Probate Code without change. This section does not apply if the testator died before January 1, 1985. See Section 6103. As to the application of any amendments made after that date, see Section 3. For background on this section, see *Recommendation and Study Relating to Rights of Surviving Spouse in Property Acquired by Decedent While Domiciled Elsewhere,* 1 Cal. L. Revision Comm'n Reports E-1 (1957);

Recommendation and Study Relating to Inter Vivos Marital Property Rights in Property Acquired While Domiciled Elsewhere, 3 Cal. L. Revision Comm'n Reports I-1 (1961); *Recommendation Relating to Quasi-Community Property,* 9 Cal. L. Revision Comm'n Reports 113 (1969).

Background on Section 6101 of Repealed Code

Section 6101 was added by 1983 Cal. Stat. ch. 842 § 55. Subdivision (a) continued a portion of the first sentence of former Probate Code Section 20 (repealed by 1983 Cal. Stat. ch. 842 § 18). Subdivision (b) continued a portion of former Probate Code Sections 21 (repealed by 1983 Cal. Stat. ch. 842 § 18) and 201 (repealed by 1983 Cal. Stat. ch. 842 § 19). Subdivision (c) continued a portion of former Probate Code Section 201.5 (repealed by 1983 Cal. Stat. ch. 842 § 19). For background on the provisions of this part, see the Comment to this part under the part heading.

§ 6102. Persons to whom will may dispose of property

Comment. Section 6102 continues Section 6102 of the repealed Probate Code without change. This section does not apply if the testator died before January 1, 1985. See Section 6103. As to the application of any amendments made after that date, see Section 3. For other provisions authorizing various entities to accept testamentary gifts, see, e.g., Cal. Const. art. 9, § 9 (University of California); Cal. Const. art. 20, § 2 (Stanford University and Huntington Library); Corp. Code § 10403 (corporation for prevention of cruelty to children or animals); Educ. Code §§ 19174 (county library), 33332 (State Department of Education), 70028 (California Maritime Academy); Harb. & Nav. Code §§ 6074 (harbor district), 6294 (port district), 6894 (river port district); Health & Safety Code §§ 8985, 9000 (public cemetery district), 32121 (hospital district); Pub. Res. Code §§ 5101 (monuments in memory of California pioneers), 5158, 5196 (park commissioners). See also Gov't Code §§ 11005, 11005.1 ("gifts" to state or state agency).

Background on Section 6102 of Repealed Code

Section 6102 was added by 1983 Cal. Stat. ch. 842 § 55. The section continued the substance of former Probate Code Section 27 (repealed by 1983 Cal. Stat. ch. 842 § 18), but omitted the obsolete reference in the former section to repealed provisions (former Sections 259-259.2). For background on the provisions of this part, see the Comment to this part under the part heading.

§ 6103. Application of certain chapters where testator died before January 1, 1985

Comment. Section 6103 continues Section 6103 of the repealed Probate Code without substantive change. Section 6103 limits the application of Sections 6100-6303 in cases where the testator died before January 1, 1985, the operative date of those sections. As to the application of any amendments made after that date, see Section 3. For

instances where the transitional rule is otherwise specifically provided, see Sections 6122, 6226, and 6247.

Background on Section 6103 of Repealed Code

Section 6103 was a new provision added by 1984 Cal. Stat. ch. 892 § 21.7. See *Recommendation Relating to Revision of Wills and Intestate Succession Law*, 17 Cal. L. Revision Comm'n Reports 537 (1984). See also *Communication of Law Revision Commission Concerning Assembly Bill 2290*, 18 Cal. L. Revision Comm'n Reports 77, 85 (1986).

§ 6104. Effect of duress, menace, fraud, or undue influence

Comment. Section 6104 continues Section 6104 of the repealed Probate Code without change.

Background on Section 6104 of Repealed Code

Section 6104 was added by 1988 Cal. Stat. ch. 1199 § 74. The section restated former Probate Code Section 328.3 (added by 1983 Cal. Stat. ch. 842 § 26 and repealed by 1988 Cal. Stat. ch. 1199 § 40) without substantive change. For background on the provisions of this part, see the Comment to this part under the part heading. See also *Comments to Conforming Revisions and Repeals*, 19 Cal. L. Revision Comm'n Reports 1031, 1089 (1988).

§ 6105. Conditional will

Comment. Section 6105 continues Section 6105 of the repealed Probate Code without change.

Background on Section 6105 of Repealed Code

Section 6105 was added by 1988 Cal. Stat. ch. 1199 § 74.5. The section restated former Probate Code Section 328.7 (added by 1983 Cal. Stat. ch. 842 § 27 and repealed by 1988 Cal. Stat. ch. 1199 § 40) without substantive change. For background on the provisions of this part, see the Comment to this part under the part heading. See also *Comments to Conforming Revisions and Repeals*, 19 Cal. L. Revision Comm'n Reports 1031, 1089 (1988).

CHAPTER 2. EXECUTION OF WILLS

§ 6110. Witnessed will

Comment. Section 6110 continues Section 6110 of the repealed Probate Code without change. This section does not apply if the testator died before January 1, 1985. See Section 6103. As to the application of any amendments made after that date, see Section 3.

The signing or acknowledgment of the will must take place in the presence of the witnesses, present at the same time, but does not require that the witnesses sign in the presence of each other. This is consistent with prior law. See, e.g., In re Estate of Armstrong, 8 Cal. 2d 204, 209-10, 64 P.2d 1093 (1937).

The witness must understand that the instrument being witnessed is a will. The witness may obtain the necessary understanding by any means. For example, the witness may know that the instrument is a will by

examining the instrument itself or from the circumstances surrounding the execution of the will. Nothing in Section 6110 requires that the testator disclose the contents of the will.

The introductory clause of Section 6110 recognizes that the validity of the execution of a will may be determined pursuant to some other provision of this part. See Sections 6111 (holographic will), 6221 (California statutory will), 6381-6385 (international will). The will may be valid if its execution complies with the law of another place. See Section 6113. See also Sections 6112 (devise to a witness to the will), 8220 (proof of will).

Background on Section 6110 of Repealed Code

Section 6110 was added by 1983 Cal. Stat. ch. 842 § 55. The section superseded former Probate Code Section 50 (repealed by 1983 Cal. Stat. ch. 842 § 18). Section 6110 relaxed the formalities required under former Section 50 by eliminating the requirements (1) that the testator's signature be "at the end" of the will, (2) that the testator "declare" to the witnesses that the instrument is his or her will, (3) that the witnesses' signatures be "at the end" of the will, (4) that the testator "request" the witnesses to sign the will, and (5) that the witnesses sign the will in the testator's presence. Section 6110 continued the requirements of former Section 50 that (1) the will be in writing, (2) that the will be signed by the testator or by someone else who signs the testator's name in the testator's presence and by the testator's direction, (3) that the will be signed or the testator acknowledge the signature in the presence of two witnesses who are present at the same time, and (4) that the witnesses sign the will.

The requirement of subdivision (c)(2) of Section 6110 that the witness understand that the instrument being witnessed is a will replaced the former requirement that the testator "declare" to the witnesses that the instrument is his or her will. The new requirement codified California decisional law which did not apply the former declaration requirement literally and held the requirement satisfied if it is apparent from the testator's conduct and the surrounding circumstances that the instrument is a will. See 7 B. Witkin, Summary of California Law *Wills and Probate* § 118, at 5633-34 (8th ed. 1974).

For background on the provisions of this part, see the Comment to this part under the part heading.

§ 6111. Holographic will

Comment. Section 6111 continues Section 6111 of the repealed Probate Code without change. This section does not apply if the testator died before January 1, 1985. See Section 6103. As to the application of any amendments made after that date, see Section 3.

Subdivision (a) of Section 6111 is the same in substance as Section 2-503 of the Uniform Probate Code (1987). The Uniform Probate Code does not contain a provision comparable to subdivision (b) of Section 6111. As to the construction of provisions drawn from uniform acts, see Section 2.

Paragraph (1) of subdivision (b) is a clarifying provision designed to deal with the situation where the holographic will and another will have

inconsistent provisions as to the same property or otherwise have inconsistent provisions. To deal specifically with this situation, paragraph (1) requires either that the holographic will be dated or that the time of its execution be shown to be after the date of execution of the other will. If the date of execution of the holographic will cannot be established by a date in the will or by other evidence to be after the date of execution of the other will, the holographic will is invalid to the extent that the date of its execution is material in resolving the issue of whether it or the other inconsistent will is to be given effect. Where the conflict between the holographic will and the other will is to only a portion of the property governed by the holographic will, the invalidity of the holographic will as to the property governed by the other will does not affect the validity of the holographic will as to other property. Paragraph (1) also covers the situation where both wills are holographic and undated and have inconsistent provisions on a particular matter; in such a case, Section 6111 applies to both wills. If it cannot be established that one of the holographic wills was executed after the other, neither will is valid insofar as the two wills are inconsistent; but, in such case, the validity of the consistent provisions of the two wills is not affected by the failure to establish time of execution.

Paragraph (2) of subdivision (b) applies to the situation where the testator lacked testamentary capacity at any time during which the holographic will might have been executed. Thus, if the testator lacks testamentary capacity at the time of his or her death and the holographic will is found with the testator's personal effects, the will is invalid unless it is established that the will was executed at a time when the testator did have testamentary capacity. This could be established, for example, by evidence of a person who saw the testator make the holographic will and can testify that the testator had testamentary capacity at that time. Likewise, where a testator lacked testamentary capacity for a period prior to death and the undated holographic will is found in the testator's safe deposit box, it could be established that the will was executed at a time when the testator did have testamentary capacity if it were shown that the testator did not have access to the safe deposit box at any time after the testator lost the capacity to execute a will. Paragraph (2) does not invalidate a holographic will if it could not have been executed at a time when the testator lacked testamentary capacity. For example, if the testator becomes ill and requires hospitalization, loses his or her testamentary capacity and dies during the hospitalization period, and the testator's holographic will is found at the testator's home, the will must have been executed before the testator's hospitalization and therefore at a time when the testator had testamentary capacity.

This section was enacted upon recommendation of the California Law Revision Commission. See *Recommendation Relating to Holographic and Nuncupative Wills,* 16 Cal. L. Revision Comm'n Reports 301 (1982).

Background on Section 6111 of Repealed Code

Section 6111 was added by 1983 Cal. Stat. ch. 842 § 55. The section continued former Probate Code Section 53 (repealed by 1983 Cal. Stat. ch. 842 § 18). For background on the provisions of this part, see the Comment to this part under the part heading.

§ 6112. Witnesses; interested witnesses

Comment. Section 6112 continues Section 6112 of the repealed Probate Code without substantive change. See also Section 76 ("subscribing witness" defined).

Subdivision (a) and the first sentence of subdivision (b) of Section 6112 are the same as Section 2-505 of the Uniform Probate Code (1987). As to the construction of provisions drawn from uniform acts, see Section 2. Section 6112 does not apply if the testator died before January 1, 1985. See Section 6103. As to the application of any amendments made after that date, see Section 3.

Section 6112 does not continue the pre-1983 rule that disqualified a subscribing witness from taking a share under the will larger than his or her intestate share unless there were two other disinterested subscribing witnesses. Under Section 6112, a witness may take under the will if the witness satisfies the burden of proving that the devise was not procured by duress, menace, fraud, or undue influence. The presumption of duress, menace, fraud, or undue influence established by Section 6112 only applies to the devise to the witness, and the presumption does not apply if there are two other witnesses to the will who are disinterested witnesses. See also Section 6104 (execution or revocation procured by duress, menace, fraud, or undue influence).

Where the will is witnessed by a person to whom a devise is made in a fiduciary capacity, under subdivision (c) the presumption of undue influence does not apply. Even though fraud or undue influence is not presumed in such a case, it may still be proven as a question of fact. See new subdivision (d) (last sentence).

If the witness fails to meet the burden of overcoming the presumption and the devise to that witness is not inconsistent with, and can be separated from, the remainder of the will, only the devise to the witness fails and not the entire will. In re Estate of Carson, 184 Cal. 437, 441, 194 P. 5 (1920); Estate of Molera, 23 Cal. App. 3d 993, 1001, 100 Cal. Rptr. 696 (1972); Estate of Stauffer, 142 Cal. App. 2d 35, 41, 297 P.2d

1029 (1956); In re Estate of Webster, 43 Cal. App. 2d 6, 15-16, 110 P.2d 81 (1941).

Background on Section 6112 of Repealed Code

Section 6112 was added by 1983 Cal. Stat. ch. 842 § 55 and was amended by 1984 Cal. Stat. ch. 892 § 22, 1988 Cal. Stat. ch. 1199 § 75, and 1989 Cal. Stat. ch. 544 § 4. The section superseded former Probate Code Sections 51 and 52 (sections repealed by 1983 Cal. Stat. ch. 842 § 18). For background on the provisions of this part, see the Comment to this part under the part heading.

The 1984 amendment limited the scope of subdivision (b) and added subdivision (c) which continued the substance of a portion of former Probate Code Section 51. See *Recommendation Relating to Revision of Wills and Intestate Succession Law*, 17 Cal. L. Revision Comm'n Reports 537 (1984). See also *Communication of Law Revision Commission Concerning Assembly Bill 2290*, 18 Cal. L. Revision Comm'n 77, 86 (1986).

The 1988 amendment added subdivision (d) which restated former Probate Code Section 372.5 (added by 1983 Cal. Stat. ch. 842 § 30, amended by 1984 Cal. Stat. ch. 892 § 18, and repealed by 1988 Cal. Stat. ch. 1199 § 42) without substantive change. As to the 1988 amendment, see *Comments to Conforming Revisions and Repeals*, 19 Cal. L. Revision Comm'n Reports 1031, 1089 (1988).

The 1989 amendment revised subdivision (c) to make clear that, where the will is witnessed by a person to whom a devise is made in a fiduciary capacity, the presumption of undue influence does not apply. The references to a "subscribing" witness were deleted from subdivision (c) in recognition of the fact that a will need not be signed at the end. Former subdivision (d), relating to no contest clauses, was deleted and the matter dealt with comprehensively in Sections 21300 to 21307. See *Recommendation Relating to No Contest Clauses*, 20 Cal. L. Revision Comm'n Reports 7 (1990); see also *Communication from the California Law Revision Commission Concerning Assembly Bill 158*, 20 Cal. L. Revision Comm'n Reports 235 (1990).

§ 6113. Choice of law as to validity of execution of will

Comment. Section 6113 continues Section 6113 of the repealed Probate Code without substantive change. This section applies whether or not the will was executed in California. This section does not apply if the testator died before January 1, 1985. See Section 6103. As to the application of any amendments made after that date, see Section 3.

Section 6113 is the same in substance as Section 2-506 of the Uniform Probate Code (1987). The references to the provisions relating to California statutory wills and international wills are added to the Uniform Probate Code provision. As to the construction of provisions drawn from uniform acts, see Section 2.

Background on Section 6113 of Repealed Code

Section 6113 was added by 1983 Cal. Stat. ch. 842 § 55. The section superseded former Probate Code Section 26 (repealed by 1983 Cal. Stat. ch. 842 § 18). Former Section 26 applied only where a will executed outside California was offered for probate in California; Section 6113 applied whether or not the will was executed in California. For background on the provisions of this part, see the Comment to this part under the part heading.

CHAPTER 3. REVOCATION AND REVIVAL

§ 6120. Revocation by subsequent will or by act

Comment. Section 6120 continues Section 6120 of the repealed Probate Code without change. This section is the same in substance as Section 2-507 of the Uniform Probate Code (1987). As to the construction of provisions drawn from uniform acts, see Section 2. This section does not apply if the testator died before January 1, 1985. See Section 6103. As to the application of any amendments made after that date, see Section 3.

Background on Section 6120 of Repealed Code

Section 6120 was added by 1983 Cal. Stat. ch. 842 § 55. The section superseded former Probate Code Sections 72 and 74 (sections repealed by 1983 Cal. Stat. ch. 842 § 18). The provision of former Section 74 requiring two witnesses to prove revocation of a will by someone other than the testator was not continued. Section 6120 otherwise was consistent with former Sections 72 and 74. For background on the provisions of this part, see the Comment to this part under the part heading.

§ 6121. Revocation of will executed in duplicate

Comment. Section 6121 continues Section 6121 of the repealed Probate Code without change. This section does not apply if the testator died before January 1, 1985. See Section 6103. As to the application of any amendments made after that date, see Section 3.

Background on Section 6121 of Repealed Code

Section 6121 was added by 1983 Cal. Stat. ch. 842 § 55. The section continued the substance of former Probate Code Section 76 (repealed by 1983 Cal. Stat. ch. 842 § 18). For background on the provisions of this part, see the Comment to this part under the part heading.

§ 6122. Dissolution or annulment of marriage; provisions revoked; no revocation by other change in circumstances

Comment. Section 6122 continues Section 6122 of the repealed Probate Code without change. This section is the same in substance as Section 2-508 of the Uniform Probate Code (1987). As to the construction of provisions drawn from uniform acts, see Section 2. This section changed the former case law rule that dissolution or annulment of marriage had no effect on the will of either spouse. See In re Estate of Patterson, 64 Cal. App. 643, 646, 222 P. 374 (1923) cert denied, 266 U.S. 594 (1925); 7 B. Witkin, Summary of California Law *Wills and Probate* § 150, at 5666 (8th ed. 1974). See also Section 36 ("dissolution of marriage" defined), Civil Code § 4352 (required notice in judgment of dissolution or nullity). For a comparable provision, see Section 6226 (California statutory will).

Subdivision (f) limits the application of subdivisions (a)-(d) to cases where the final judgment of dissolution or annulment of marriage occurs

on or after the date this section of the repealed Probate Code first become operative.

Background on Section 6122 of Repealed Code

Section 6122 was added by 1983 Cal. Stat. ch. 842 § 55 and was amended by 1984 Cal. Stat. ch. 892 § 23. For background on the provisions of this part, see the Comment to this part under the part heading. The 1984 amendment added subdivision (f). See *Communication of Law Revision Commission Concerning Assembly Bill 2290*, 18 Cal. L. Revision Comm'n 77, 86 (1986).

§ 6123. Second will revoking first will; effect of revocation of second will

Comment. Section 6123 continues Section 6123 of the repealed Probate Code without change. This section is the same in substance as Section 2-509 of the Uniform Probate Code (1987). As to the construction of provisions drawn from uniform acts, see Section 2. This section does not apply if the testator died before January 1, 1985. See Section 6103. As to the application of any amendments made after that date, see Section 3.

Background on Section 6123 of Repealed Code

Section 6123 was added by 1983 Cal. Stat. ch. 842 § 55. The section superseded former Probate Code Section 75 (repealed by 1983 Cal. Stat. ch. 842 § 18). Section 6123 set forth a presumption against revival of a previously revoked will, the same as under former Section 75. However, unlike former Section 75, where revocation of the second will is by an act such as destruction, Section 6123 permitted the testator's intent that the first will be revived to be shown by extrinsic evidence, thus producing results generally more consistent with the testator's intent. For background on the provisions of this part, see the Comment to this part under the part heading.

§ 6124. Presumption that will destroyed with intent to revoke

Comment. Section 6124 continues Section 6124 of the repealed Probate Code without change. This section codifies existing case law. See Estate of Obernolte, 91 Cal. App. 3d 124, 153 Cal. Rptr. 798 (1979); 7 B. Witkin, Summary of California Law *Wills and Probate* § 381, at 5844 (8th ed. 1974). For a discussion of the showing required to overcome the case law presumption codified in Section 6124, see Estate of Moramarco, 86 Cal. App. 2d 326, 194 P.2d 740 (1948); 7 B. Witkin, supra § 382, at 5845. The repeal of former Section 350 (repealed by 1983 Cal. Stat. ch. 842 § 28) (proof of lost or destroyed will) did not affect the case law presumption codified in Section 6124.

The presumption codified in Section 6124 does not apply if a duplicate original of the will is found after the testator's death. For example, if a duplicate original is in possession of the testator's attorney, it is less likely that the testator will preserve his or her duplicate original with the same care as if it were the only such instrument.

Background on Section 6124 of Repealed Code

Section 6124 was a new provision added by 1985 Cal. Stat. ch. 982 § 15.5. See *Communication Concerning Assembly Bill 196*, 18 Cal. L. Revision Comm'n Reports 367, 373 (1986).

CHAPTER 4. REFERENCE TO MATTERS OUTSIDE THE WILL

§ 6130. Incorporation by reference

Comment. Section 6130 continues Section 6130 of the repealed Probate Code without change. This section does not apply if the testator died before January 1, 1985. See Section 6103. As to the application of any amendments made after that date, see Section 3.

Section 6130 is the same as Section 2-510 of the Uniform Probate Code (1987). As to the construction of provisions drawn from uniform acts, see Section 2. Section 6130 codifies the doctrine of incorporation by reference which was recognized by prior California case law. See 7 B. Witkin, Summary of California Law *Wills and Probate* § 143, at 5660 (8th ed. 1974). The doctrine of incorporation by reference has been used, for example, to permit a validly executed will or codicil to incorporate by reference an earlier will which was defectively executed, and thereby to cure the defect of the former instrument. In re Estate of Plumel, 151 Cal. 77, 90 P. 192 (1907). See also Section 88 ("will" includes a codicil).

Background on Section 6130 of Repealed Code

Section 6130 was a new provision added by 1983 Cal. Stat. ch. 842 § 55. For background on the provisions of this part, see the Comment to this part under the part heading. See also *Communication of Law Revision Commission Concerning Assembly Bill 2290*, 18 Cal. L. Revision Comm'n Reports 77, 86 (1986).

§ 6131. References to acts and events of independent significance

Comment. Section 6131 continues Section 6131 of the repealed Probate Code without change. This section is the same as Section 2-512 of the Uniform Probate Code (1987). As to the construction of provisions drawn from uniform acts, see Section 2. Section 6131 codifies the doctrine of acts and events of independent significance. See generally 7 B. Witkin, Summary of California Law *Wills and Probate* § 147, at 5662-63 (8th ed. 1974). The section does not apply if the testator died before January 1, 1985. See Section 6103. As to the application of any amendments made after that date, see Section 3.

Background on Section 6131 of Repealed Code

Section 6131 was a new provision added by 1983 Cal. Stat. ch. 842 § 55. For background on the provisions of this part, see the Comment to this part under the part heading.

CHAPTER 5. RULES OF CONSTRUCTION OF WILLS

Article 1. General Provisions

§ 6140. Intention of testator

Comment. Section 6140 continues Section 6140 of the repealed Probate Code without change. This section is drawn from Section 2-603 of the Uniform Probate Code (1987). As to the construction of provisions drawn from uniform acts, see Section 2. Nothing in the section limits the extent to which extrinsic evidence admissible under former law may be used to determine the testator's intent as expressed in the will. See generally 7 B. Witkin, Summary of California Law *Wills and Probate* §§ 160-62, at 5676-79 (8th ed. 1974). Section 6140 does not apply if the testator died before January 1, 1985. See Section 6103. As to the application of any amendments made after that date, see Section 3. See also Sections 9680 (provision in will directing personal representative to hire particular person to advise or assist the personal representative is directory only), 12206 (limitation in will of time for administration of estate is directory only).

Background on Section 6140 of Repealed Code

Section 6140 was added by 1983 Cal. Stat. ch. 842 § 55 and amended by 1984 Cal. Stat. ch. 892 § 24. The section superseded the second sentence of former Probate Code Section 101 (repealed by 1983 Cal. Stat. ch. 842 § 18). For background on the provisions of this part, see the Comment to this part under the part heading. The 1984 amendment substituted language drawn from Section 2-603 of the Uniform Probate Code (1987) for the former language of the section. This change was nonsubstantive. See *Communication of Law Revision Commission Concerning Assembly Bill 2290*, 18 Cal. L. Revision Comm'n Reports 77, 86 (1986). See also *Recommendation Relating to Revision of Wills and Intestate Succession Law*, 17 Cal. L. Revision Comm'n Reports 537 (1984).

§ 6141. Choice of law as to meaning and effect of disposition in will

Comment. Section 6141 continues Section 6141 of the repealed Probate Code without change. This section is consistent with Section 2-602 of the Uniform Probate Code (1987). The reference in Section 2-602 of the Uniform Probate Code to elective share is replaced by a reference to the rights of the surviving spouse in community and quasi-community property. Subdivision (b) is drawn from the reference in Section 2-602 of the Uniform Probate Code to provisions relating to elective share, exempt property, and allowances. As to the construction of provisions drawn from uniform acts, see Section 2. See also Section 78 (definition of "surviving spouse"). Section 6141 does not apply if the testator died before January 1, 1985. See Section 6103. As to the application of any amendments made after that date, see Section 3.

Background on Section 6141 of Repealed Code

Section 6141 was added by 1983 Cal. Stat. ch. 842 § 55. The section superseded former Probate Code Section 100 (repealed by 1983 Cal. Stat. ch. 842 § 18). For background on the provisions of this part, see the Comment to this part under the part heading.

§ 6142. Will passes all property, including after-acquired property

Comment. Section 6142 continues Section 6142 of the repealed Probate Code without change. This section is the same in substance as Section 2-604 of the Uniform Probate Code (1987). As to the construction of provisions drawn from uniform acts, see Section 2. Nothing in Section 6142 limits the extent to which extrinsic evidence admissible under former law may be used to determine the testator's intent as expressed in the will. See generally 7 B. Witkin, Summary of California Law *Wills and Probate* §§ 160-62, at 5676-79 (8th ed. 1974). This section does not apply if the testator died before January 1, 1985. See Section 6103. As to the application of any amendments made after that date, see Section 3.

Background on Section 6142 of Repealed Code

Section 6142 was added by 1983 Cal. Stat. ch. 842 § 55 and amended by 1984 Cal. Stat. ch. 892 § 25. The section continued the substance of former Probate Code Sections 120, 121, 125, and 126 (sections repealed by 1983 Cal. Stat. ch. 842 § 18). The "except" clause of Section 6142 was taken from former Probate Code Sections 125 and 126 (sections repealed by 1983 Cal. Stat. ch. 842 § 18) and was consistent with the Uniform Probate Code. See Uniform Probate Code §§ 2-604, 2-610 (1987). For background on the provisions of this part, see the Comment to this part under the part heading. The 1984 amendment revised the language of the section to provide that the section applies unless a contrary intention is indicated "by the will." This change was nonsubstantive. See *Communication of Law Revision Commission Concerning Assembly Bill 2290*, 18 Cal. L. Revision Comm'n Reports 77, 87 (1986). See also *Recommendation Relating to Revision of Wills and Intestate Succession Law*, 17 Cal. L. Revision Comm'n Reports 537 (1984).

§ 6143. Devisees as owners in common

Comment. Section 6143 continues Section 6143 of the repealed Probate Code without change. Nothing in the section limits the extent to which extrinsic evidence admissible under former law may be used to determine the testator's intent as expressed in the will. Many cases have permitted extrinsic evidence of surrounding circumstances to show what was meant by the words of the will. See, e.g., Estate of Russell, 69 Cal. 2d 200, 214-15, 444 P.2d 353, 70 Cal. Rptr. 561 (1968). See generally 7 B. Witkin, Summary of California Law *Wills and Probate* §§ 159-62, at 5674-79 (8th ed. 1974). As used in Section 6143, "devise" means a disposition of real or personal property by will. See Section 32. Section 6143 does not apply if the testator died before January 1, 1985. See

Section 6103. As to the application of any amendments made after that date, see Section 3.

Background on Section 6143 of Repealed Code

Section 6143 was added by 1983 Cal. Stat. ch. 842 § 55 and was amended by 1984 Cal. Stat. ch. 892 § 26. The section continued the substance of former Probate Code Section 29 (repealed by 1983 Cal. Stat. ch. 842 § 18). For background on the provisions of this part, see the Comment to this part under the part heading. The 1984 amendment revised the language of the section to provide that the section applies unless a contrary intention is indicated "by the will." This change was nonsubstantive. See *Communication of Law Revision Commission Concerning Assembly Bill 2290,* 18 Cal. L. Revision Comm'n Reports 77, 87 (1986). See also *Recommendation Relating to Revision of Wills and Intestate Succession Law,* 17 Cal. L. Revision Comm'n Reports 537 (1984).

§ 6144. Direction in will to convert real property to money

Comment. Section 6144 continues Section 6144 of the repealed Probate Code without change. This section is declaratory of the common law doctrine of equitable conversion. See In re Estate of Gracey, 200 Cal. 482, 488-89, 253 P. 921 (1927). See generally 7 B. Witkin, Summary of California Law *Equity* §§ 118-21, at 5337-40 (8th ed. 1974). Nothing in the section limits the extent to which extrinsic evidence admissible under former law may be used to determine the testator's intent as expressed in the will. See generally 7 B. Witkin, Summary of California Law *Wills and Probate* §§ 160-62, at 5676-79 (8th ed. 1974). Section 6144 does not apply if the testator died before January 1, 1985. See Section 6103. As to the application of any amendments made after that date, see Section 3.

Background on Section 6144 of Repealed Code

Section 6144 was added by 1983 Cal. Stat. ch. 842 § 55 and amended by 1984 Cal. Stat. ch. 892 § 27. The section was the same in substance as former Probate Code Section 124 (repealed by 1983 Cal. Stat. ch. 842 § 18). For background on the provisions of this part, see the Comment to this part under the part heading. The 1984 amendment revised the language of the section to provide that the section applies unless a contrary intention is indicated "by the will." This change was nonsubstantive. See *Communication of Law Revision Commission Concerning Assembly Bill 2290,* 18 Cal. L. Revision Comm'n Reports 77, 87 (1986). See also *Recommendation Relating to Revision of Wills and Intestate Succession Law,* 17 Cal. L. Revision Comm'n Reports 537 (1984).

§ 6145. Common law rule of worthier title abolished

Comment. Section 6145 continues Section 6145 of the repealed Probate Code without change. This section does not apply if the testator died before January 1, 1985. See Section 6103. As to the application of any amendments made after that date, see Section 3. See also Section 6151 (devise to heirs or next of kin). For background on this section, see

Recommendation and Study Relating to The Doctrine of Worthier Title, 2 Cal. L. Revision Comm'n Reports D-1 (1959).

Background on Section 6145 of Repealed Code

Section 6145 was added by 1983 Cal. Stat. ch. 842 § 55. The section continued the substance of former Probate Code Section 109 (repealed by 1983 Cal. Stat. ch. 842 § 18). Section 6145 omitted references to a "bequest" which appeared in former Section 109. As used in Section 6145, "devise" applied to dispositions by will of both real and personal property. See Section 32. For background on the provisions of this part, see the Comment to this part under the part heading.

§ 6146. Failure of devisee to survive

Comment. Section 6146 continues Section 6146 of the repealed Probate Code without change. The question of whether or not survivorship is required is to be determined according to general rules of construction. See, e.g., Section 6140 (intention of testator). See also 6153 (presumption that testamentary disposition vests at testator's death). Section 6146 does not apply if the testator died before January 1, 1985. See Section 6103. As to the application of any amendments made after that date, see Section 3.

With respect to a class gift of a future interest, subdivision (a) of Section 6146 must be read together with Sections 6150 and 6151. If the devisee fails to survive but is properly related to the testator or the testator's spouse, the antilapse statute may substitute the devisee's issue. See Section 6147. Section 6150, which deals with the addition of new members to the class after the testator's death but before the future interest takes effect in enjoyment, establishes a constructional preference in favor of adding members to the class during that period. Section 6151 is a special application of, and is consistent with, Section 6150. See also Section 6149 (death "with" or "without" issue).

Paragraph (1) of subdivision (b) of Section 6146 is consistent with Section 220. See the Comment to Section 220. Paragraph (2) of subdivision (b) applies a similar rule where the will requires the devisee to survive until some future time. For a provision governing the administration and disposition of community property and quasi-community property where one spouse does not survive the other, see Section 103. See also Sections 230-234 (proceeding to determine whether devisee survived testator).

Background on Section 6146 of Repealed Code

Section 6146 was added by 1983 Cal. Stat. ch. 842 § 55 and was amended by 1984 Cal. Stat. ch. 892 § 28. For background on the provisions of this part, see the Comment to this part under the part heading.

Subdivision (a) of Section 6146 continued the substance of the first portion of former Probate Code Section 92 (repealed by 1983 Cal. Stat. ch. 842 § 18). The second sentence of subdivision (a) of Section 6146 as added in 1983 was a new

provision that established a constructional preference in favor of contingent remainders (survivorship required) rather than vested remainders (survivorship not required). This sentence was deleted by the 1984 amendment. See *Communication of Law Revision Commission Concerning Assembly Bill 2290*, 18 Cal. L. Revision Comm'n Reports 77, 87 (1986). See also *Recommendation Relating to Revision of Wills and Intestate Succession Law*, 17 Cal. L. Revision Comm'n Reports 537 (1984).

Paragraph (1) of subdivision (b) of Section 6146 superseded former Probate Code Sections 296 and 296.6 (sections repealed by 1983 Cal. Stat. ch. 842 § 20) insofar as those sections applied to wills. Paragraph (2) of subdivision (b) was a new provision.

§ 6147. Anti-lapse statute; substitute devisee

Comment. Section 6147 continues Section 6147 of the repealed Probate Code without substantive change.

Subdivision (a) makes the antilapse statute apply not only to kindred of the testator (as under former law), but also to kindred of a surviving, deceased, or former spouse of the testator. Thus, if the testator were to make a devise to a stepchild who predeceased the testator, Section 6147 will make a substitute gift to issue of the predeceased stepchild. The term "kindred" was taken from former Probate Code Section 92 (repealed by 1983 Cal. Stat. ch. 842, § 18) and refers to persons related by blood. Cf. In re Estate of Sowash, 62 Cal. App. 512, 516, 217 P. 123 (1923). In general, an adoptee is kindred of the adoptive family and not of the adoptee's natural relatives. See Section 6152. See also Estate of Goulart, 222 Cal. App. 2d 808, 35 Cal. Rptr. 465 (1963). As to when a devisee is treated as if he or she predeceased the testator, see Section 6146 (simultaneous death). See also Sections 230-234 (proceeding to determine survival), 240 (manner of taking by representation), 250 (effect of feloniously and intentionally killing decedent), 6152(c)(1), (2) (half bloods, adopted persons, persons born out of wedlock, stepchildren, foster children, and issue of such persons, as "kindred" or "issue").

The first sentence of subdivision (b) is drawn from the first sentence of Uniform Probate Code Section 2-605 (1987). The second sentence of subdivision (b) is drawn from the second sentence of Uniform Probate Code Section 2-605; but, unlike the Uniform Probate Code, Section 6147 does not make a substitute gift in the case of a class gift where a person otherwise answering the description of the class was dead when the will was executed and that fact was known to the testator. As to the construction of provisions drawn from uniform acts, see Section 2. The second sentence of subdivision (b) is consistent with Estate of Steidl, 89 Cal. App. 2d 488, 201 P.2d 58 (1948) (antilapse statute applied where class member died before testator but after execution of will).

The first sentence of subdivision (c) makes clear that the issue of the deceased devisee do not take if the will expresses a contrary intention or

makes a substitute disposition. The second and third sentences of subdivision (c) make clear that the anti-lapse provisions of Section 6147 do not apply when the will requires that the devisee survive for a specified period of time after the death of the testator or until a future time related to probate of the will or administration of the estate. Wills often require that a devisee survive for periods ranging from 30 to 180 days after the death of the testator. See B. King, *Outright Testamentary Gifts,* in California Will Drafting Practice § 821, at 349-50 (Cal. Cont. Ed. Bar 1982). The inclusion of the second and third sentences ensure that such a provision in the will negates application of the anti-lapse statute as the drafter likely intended. See id. § 11.12, at 360.

Section 6147 applies does not apply if the testator died before January 1, 1985. See Section 6103. As to the application of any amendments made after that date, see Section 3.

Background on Section 6147 of Repealed Code

Section 6147 was added by 1983 Cal. Stat. ch. 842 § 55 and was amended by 1984 Cal. Stat. ch. 892 § 29, 1985 Cal. Stat. ch. 359 § 4, and 1985 Cal. Stat. ch. 982 § 16. Section 6147 superseded former Probate Code Section 92 (repealed by 1983 Cal. Stat. ch. 842 § 18). For background on the provisions of this part, see the Comment to this part under the part heading.

Subdivision (a) of Section 6147 expanded former Probate Code Section 92 to apply the antilapse statute to kindred of a surviving, deceased, or former spouse of the testator.

The first sentence of subdivision (b) was consistent with former Section 92. The second sentence of subdivision (b) was a new provision that was consistent with prior case law. See Estate of Steidl, 89 Cal. App. 2d 488, 201 P.2d 58 (1948) (antilapse statute applied where class member died before testator but after execution of will).

The first sentence of subdivision (c) continued the substance of a portion of former Section 92. The second sentence that originally was included in subdivision (c) when Section 6147 was added in 1983 was a new provision that was deleted by the 1984 amendment. See *Communication of Law Revision Commission Concerning Assembly Bill 2290,* 18 Cal. L. Revision Comm'n Reports 77, 87 (1986). See also *Recommendation Relating to Revision of Wills and Intestate Succession Law,* 17 Cal. L. Revision Comm'n Reports 537 (1984). The 1985 amendment added what are now the second and third sentences of subdivision (c) and made nonsubstantive revisions. See *Communication Concerning Assembly Bill 196,* 18 Cal. L. Revision Comm'n Reports 367, 374 (1986). See also *Recommendation Relating to Distribution Under a Will or Trust,* 18 Cal. L. Revision Comm'n Reports 269, 283 (1986).

§ 6148. Failed devise

Comment. Section 6148 continues Section 6148 of the repealed Probate Code without change. This section is the same in substance as Section 2-606 of the Uniform Probate Code (1987), except that where a share of a future interest devised to two or more persons fails, the share passes to the other devisees of the future interest under subdivision (b) rather than becoming part of the residue under subdivision (a). As to the construction of provisions drawn from uniform acts, see Section 2.

With respect to a residuary devise, subdivision (b) changes the former California case law rule that if the share of one of several residuary devisees fails, the share passed by intestacy. See, e.g., Estate of Russell, 69 Cal. 2d 200, 215-16, 444 P.2d 353, 70 Cal. Rptr. 561 (1968); In re Estate of Kelleher, 205 Cal. 757, 760-61, 272 P. 1060 (1928); Estate of Anderson, 166 Cal. App. 2d 39, 42, 332 P.2d 785 (1958). Section 6148 does not apply if the testator died before January 1, 1985. See Section 6103. As to the application of any amendments made after that date, see Section 3.

Background on Section 6148 of Repealed Code

Section 6148 was a new provision added by 1983 Cal. Stat. ch. 842 § 55. For background on the provisions of this part, see the Comment to this part under the part heading.

§ 6149. Conditions regarding "issue"

Comment. Section 6149 continues Section 6149 of the repealed Probate Code without change. This section overrules California's much criticized theory of indefinite failure of issue established by In re Estate of Carothers, 161 Cal. 588, 119 P. 926 (1911). See generally 7 B. Witkin, Summary of California Law *Wills and Probate* §§ 192-93, at 5704-05 (8th ed. 1974). Section 6149 adopts the majority view and the view of the Restatement of Property. See 7 B. Witkin, supra § 193, at 5704-05; Annot., 26 A.L.R. 3d 407 (1969); Restatement of Property § 269 (1940). Under Section 6149, if the devise is "to A for life, remainder to B and his heirs, but if B dies without issue, then to C," the devise is read as meaning if B dies before A without issue living at the death of A. If B survives A, whether or not B then has living issue, B takes the devise absolutely. If B predeceases A with issue then living but at the time of A's subsequent death B does not have living issue, the devise goes to C. Section 6149 does not apply if the testator died before January 1, 1985. See Section 6103. As to the application of any amendments made after that date, see Section 3.

Background on Section 6149 of Repealed Code

Section 6149 was a new provision added by 1983 Cal. Stat. ch. 842 § 55. For background on the provisions of this part, see the Comment to this part under the part heading.

§ 6150. Devise to a class; time of vesting; afterborn member

Comment. Section 6150 continues Section 6150 of the repealed Probate Code without substantive change. This section does not apply if the testator died before January 1, 1985. See Section 6103. As to the application of any amendments made after that date, see Section 3.

Subdivision (b) applies to a devise of a future interest and permits enlargement of the class after the testator's death and before the devise

takes effect in enjoyment. The question of whether class membership may be diminished by death after the testator's death but before the devise takes effect in enjoyment is dealt with by Section 6146 which establishes a constructional preference for requiring class members to survive until the devise takes effect in enjoyment (subject to possible application of the antilapse statute—Section 6147). See also Section 6151 (devise to testator's or another designated person's "heirs," "next of kin," "relatives," "family," or the like). Section 6151 is a special application of, and is consistent with, Section 6150.

Subdivision (c) is comparable to the rule in intestate succession. See Section 6407.

Background on Section 6150 of Repealed Code

Section 6150 was added by 1983 Cal. Stat. ch. 842 § 55. Subdivisions (a) and (b) continued the substance of the first sentence of former Probate Code Section 123 (repealed by 1983 Cal. Stat. ch. 842 § 18). Subdivision (c) continued the substance of the second sentence of former Probate Code Section 123, but made clear that the rule is not limited to a child of the testator. For background on the provisions of this part, see the Comment to this part under the part heading.

§ 6151. Class gift to "heirs," "next of kin," "relatives," or the like

Comment. Section 6151 continues Section 6151 of the repealed Probate Code with a revision that the devise is to take effect according to the California statutes of intestate succession "of property not acquired from a predeceased spouse." This excludes the application of the in-law inheritance statute (Section 6402.5) to a devise covered by Section 6151.

Section 6151 is drawn from Section 2514 of the Pennsylvania Consolidated Statutes, Title 20, and establishes a special rule for a class gift to an indefinite class such as the testator's or another designated person's "heirs," "next of kin," "relative," "family," or the like. As Section 6151 applies to a devise of a future interest, the section is consistent with Sections 6146 and 6150 in that Section 6151 establishes a constructional preference against early vesting. However, Section 6151 differs from Sections 6146 and 6150 in that one who does not survive until the future interest takes effect in enjoyment is not deemed a member of the indefinite class described in Section 6151 (such as "heirs"), is therefore not a "devisee" under the class gift, and no substitute gift will be made by the antilapse statute (Section 6147). If the devise of a future interest is to a more definite class such as "children," one coming within that description who fails to survive until the devise takes effect in enjoyment does not take under the will (Section 6146) but may nonetheless be a "deceased devisee" under the antilapse statute (Section 6147) permitting substitution of the deceased devisee's issue. See the

Comments to Sections 6146 and 6147. See also Section 6152(c)(3) (rules for determining persons who would be heirs of testator or other person).

By postponing the determination of class membership until the gift takes effect in enjoyment where the class is indefinite (e.g., to "heirs,"), Section 6151 should reduce the uncertainty of result under prior law. See Halbach, *Future Interests: Express and Implied Conditions of Survival,* 49 Calif. L. Rev. 297, 317-20 (1961). Section 6151 is consistent with Estate of Easter, 24 Cal. 2d 191, 148 P.2d 601 (1944).

Section 6151 does not apply if the testator died before January 1, 1985. See Section 6103. As to the application of any amendments made after that date, see Section 3.

Background on Section 6151 of Repealed Code

Section 6151 was a new provision added by 1983 Cal. Stat. ch. 842 § 55. For background on the provisions of this part, see the Comment to this part under the part heading.

§ 6152. Half-bloods, adopted persons, persons born out of wedlock, stepchildren, and foster children

Comment. Section 6152 continues Section 6152 of the repealed Probate Code without change.

Subdivision (a) is the same in substance as Section 2-611 of the Uniform Probate Code (1987). As to the construction of provisions drawn from uniform acts, see Section 2. To the extent that California cases had addressed the matter, subdivision (a) is consistent with prior California law. See 7 B. Witkin, Summary of California Law *Wills and Probate* §§ 197-200, at 5708-12 (8th ed. 1974). For the rules for determining relationship and inheritance rights for purposes of intestate succession, see Sections 6406, 6408. Under some circumstances stepchildren and foster children are included in terms of class gift or relationship pursuant to the rules for intestate succession. See Section 6408 (when stepchild or foster child treated the same as adopted child).

Subdivision (b) is included to preclude the adoption of a person (often an adult) solely for the purpose of permitting the adoptee to take under the will of another. Subdivision (b) also construes a devise to exclude a child born out of wedlock (where the testator is not the parent) if the child never lives while a minor as a regular member of the parent's household. A child is included in class gift terminology in the testator's will if the child lived while a minor or as a regular member of the household of the parent's spouse or surviving spouse. As a result, a child born of a marital relationship will almost always be included in the class, consistent with the testator's likely intent.

Subdivision (c) makes clear that the rules stated in subdivisions (a) and (b) apply for the purposes of the antilapse statute (Section 6147) and in construing devises (Section 6151).

Section 6152 does not apply if the testator died before January 1, 1985. See Section 6103. As to the application of any amendments made after that date, see Section 3.

Background on Section 6152 of Repealed Code

Section 6152 was added by 1983 Cal. Stat. ch. 842 § 55 and was amended by 1984 Cal. Stat. ch. 892 § 30 and 1985 Cal. Stat. ch. 982 § 17. The section superseded former Probate Code Section 108 (repealed by 1983 Cal. Stat. ch. 842 § 18). For background on the provisions of this part, see the Comment to this part under the part heading. The 1984 amendment inserted "stepchildren, foster children" in subdivision (a). See *Communication of Law Revision Commission Concerning Assembly Bill 2290*, 18 Cal. L. Revision Comm'n Reports 77, 87-88 (1986). See also *Recommendation Relating to Revision of Wills and Intestate Succession Law*, 17 Cal. L. Revision Comm'n Reports 537 (1984). The 1985 amendment inserted "spouse" in subdivision (b). See *Communication Concerning Assembly Bill 196*, 18 Cal. L. Revision Comm'n Reports 367, 374 (1986). See also *Recommendation Relating to Effect of Adoption or Out of Wedlock Birth on Rights at Death*, 18 Cal. L. Revision Comm'n Reports 289 (1986).

§ 6153. Presumption that testamentary disposition vests at testator's death

Comment. Section 6153 continues Section 6153 of the repealed Probate Code without change. This section does not apply if the testator died before January 1, 1985. See Section 6103. As to the application of any amendments made after that date, see Section 3.

Background on Section 6153 of Repealed Code

Section 6153 was added by 1984 Cal. Stat. ch. 892 § 31. The section continued the substance of former Probate Code Section 28 (repealed by 1983 Cal. Stat. ch. 842 § 18). See *Communication of Law Revision Commission Concerning Assembly Bill 2290*, 18 Cal. L. Revision Comm'n Reports 77, 88 (1986). See also *Recommendation Relating to Revision of Wills and Intestate Succession Law*, 17 Cal. L. Revision Comm'n Reports 537 (1984).

§ 6154. Classification of devises

Comment. Section 6154 continues Section 6154 of the repealed Probate Code without change. For the priority that a demonstrative devise has over other general devises and the priority that an annuity has over other general devises, see Section 21403(b). See also *Recommendation Relating to Interest and Income During Administration*, 19 Cal. L. Revision Comm'n Reports 1019 (1988); *Comments to Conforming Revisions and Repeals*, 19 Cal. L. Revision Comm'n Reports 1031, 1089-90 (1988); *Communication from the California Law Revision Commission Concerning Assembly Bill 2841*, 19 Cal. L. Revision Comm'n Reports 1201, 1228-29 (1988).

Background on Section 6154 of Repealed Code

Section 6154 was added by 1988 Cal. Stat. ch. 1199 § 75.5.

Subdivision (a) restated part of former Probate Code Section 662(a) (repealed by 1988 Cal. Stat. ch. 1199 § 52) without substantive change. See also Estate of Ehrenfels, 241 Cal. App. 2d 215, 221, 50 Cal. Rptr. 358 (1966).

Subdivision (b) superseded former Probate Code Section 662(e) (repealed by 1988 Cal. Stat. ch. 1199 § 52) and was consistent with case law under the former provision. See, e.g., Estate of Jones, 60 Cal. App. 2d 795, 798, 141 P.2d 764 (1943).

Subdivision (c) restated former Probate Code Section 662(b) (repealed by 1988 Cal. Stat. ch. 1199 § 52) without substantive change. The reference in subdivision (c) to a demonstrative devise as a "general" devise was new, but was consistent with prior law. See former Section 662(c) (repealed by 1988 Cal. Stat. ch. 1199 § 52) (if indicated fund fails, resort may be had to general assets as in case of general devise); 7 B. Witkin, Summary of California Law *Wills and Probate* § 214, at 5725 (8th ed. 1974) (same); Estate of Cline, 67 Cal. App. 2d 800, 804-05, 155 P.2d 390 (1945) (demonstrative devise is "in the nature of" a general devise; reference to particular fund is for convenient method of payment); Johnston, *Outright Bequests*, in California Will Drafting § 11.92, at 401 (Cal. Cont. Ed. Bar 1965) (demonstrative devise is "similar to" general devise).

Subdivision (d) was a new provision. It incorporated the definition of "pecuniary gift" provided in Section 21120(b) ("pecuniary gift" means a transfer of property made in an instrument that either is expressly stated as a fixed dollar amount or is a dollar amount determinable by the provisions of the instrument).

Subdivision (e) restated the first clause of former Probate Code Section 662(c) (repealed by 1988 Cal. Stat. ch. 1199 § 52) without substantive change. The reference in subdivision (e) to an annuity as a "general" devise was new, but was consistent with the last clause of former Section 662(c) (if indicated fund fails, resort may be had to general assets as in case of general devise) and with case law. See Estate of Luckel, 151 Cal. App. 2d 481, 493-95, 312 P.2d 24 (1957) (annuity is a "general charge on the testator's whole estate").

Subdivision (f) restated former Probate Code Section 662(d) without substantive change.

Article 2. Ascertaining Meaning of Language Used in the Will

§ 6160. Every expression to be given some effect; intestacy to be avoided

Comment. Section 6160 continues Section 6160 of the repealed Probate Code without substantive change. This section does not apply if the testator died before January 1, 1985. See Section 6103. As to the application of any amendments made after that date, see Section 3.

Background on Section 6160 of Repealed Code

Section 6160 was added by 1983 Cal. Stat. ch. 842 § 55. The section continued the substance of former Probate Code Section 102 (repealed by 1983 Cal. Stat. ch. 842 § 18). For background on the provisions of this part, see the Comment to this part under the part heading.

§ 6161. Construction of will as a whole

Comment. Section 6161 continues Section 6161 of the repealed Probate Code without change. This section does not apply if the testator died before January 1, 1985. See Section 6103. As to the application of any amendments made after that date, see Section 3.

Background on Section 6161 of Repealed Code

Section 6161 was added by 1983 Cal. Stat. ch. 842 § 55. The section continued the substance of former Probate Code Section 103 (repealed by 1983 Cal. Stat. ch. 842 § 18) except that Section 6161 omits the provision of former Section 103 that the last part must prevail where several parts of a will are absolutely irreconcilable. For background on the provisions of this part, see the Comment to this part under the part heading.

§ 6162. Words given their ordinary meaning; technical words

Comment. Section 6162 continues Section 6162 of the repealed Probate Code without change. This section does not apply if the testator died before January 1, 1985. See Section 6103. As to the application of any amendments made after that date, see Section 3.

Background on Section 6162 of Repealed Code

Section 6162 was added by 1983 Cal. Stat. ch. 842 § 55. The section continued the substance of former Probate Code Section 106 (repealed by 1983 Cal. Stat. ch. 842 § 18). For background on the provisions of this part, see the Comment to this part under the part heading.

Article 3. Exoneration; Ademption

§ 6165. Rules of construction if testator's intention not indicated

Comment. Section 6165 continues Section 6165 of the repealed Probate Code without change. This section does not apply if the testator died before January 1, 1985. See Section 6103. As to the application of any amendments made after that date, see Section 3.

Background on Section 6165 of Repealed Code

Section 6165 was added by 1983 Cal. Stat. ch. 842 § 55 and was amended by 1984 Cal. Stat. ch. 892 § 32. The section was the same in substance as the last clause of former Probate Code Section 100 (repealed by 1983 Cal. Stat. ch. 842 § 18), except that Section 6165 omits the former requirement that a contrary intention must "clearly" appear. For background on the provisions of this part, see the Comment to this part under the part heading. The 1984 amendment revised Section 6165 to provide that the rules of construction in this article apply unless a contrary intention is indicated "by the will." This change was nonsubstantive. See the Comment to Section 6142. See also *Communication of Law Revision Commission Concerning Assembly Bill 2290*, 18 Cal. L. Revision Comm'n Reports 77, 88 (1986); *Recommendation Relating to Revision of Wills and Intestate Succession Law*, 17 Cal. L. Revision Comm'n Reports 537 (1984).

§ 6170. No exoneration of lien where specific devise

Comment. Section 6170 continues Section 6170 of the repealed Probate Code without change. This section expands the rule stated in

Section 2-609 of the Uniform Probate Code (1987) to cover any lien. This expansion makes Section 6170 consistent with Section 21404. As to the construction of provisions drawn from uniform acts, see Section 2. Section 6170 reversed the prior California case law rule that, in the absence of an expressed intention of the testator to the contrary, if the debt which encumbers the devised property is one for which the testator was personally liable, the devisee was entitled to "exoneration," that is, to receive the property free of the encumbrance by having the debt paid out of other assets of the estate. See 7 B. Witkin, Summary of California Law *Wills and Probate* § 456, at 5895-96 (8th ed. 1974). The rule stated in Section 6170 applies in the absence of a contrary intention of the testator. See Section 6165. See also Section 32 ("devise" means a disposition of real or personal property by will), 62 ("property" defined). Section 6170 does not apply if the testator died before January 1, 1985. See Section 6103. As to the application of any amendments made after that date, see Section 3. For background on the provisions of this part, see the Comment to this part under the part heading.

Background on Section 6170 of Repealed Code

Section 6170 was a new provision added by 1983 Cal. Stat. ch. 842 § 55. For background on the provisions of this part, see the Comment to this part under the part heading.

§ 6171. Specific devise of securities

Comment. Section 6171 continues Section 6171 of the repealed Probate Code without change. This section is the same in substance as Section 2-607 of the Uniform Probate Code (1987) and is generally consistent with prior California case law. See 7 B. Witkin, Summary of California Law *Wills and Probate* § 220, at 5730-31 (8th ed. 1974). As to the construction of provisions drawn from uniform acts, see Section 2. The rules stated in Section 6171 apply in the absence of a contrary intention of the testator. See Section 6165. Section 6171 does not apply if the testator died before January 1, 1985. See Section 6103. As to the application of any amendments made after that date, see Section 3.

Under Section 6171, if the testator makes a specific devise of only a portion of the stock the testator owns in a particular company and there is a stock split or stock dividend, the specific devisee is entitled only to a proportionate share of the additional stock received. For example, if the testator owns 500 shares of stock in company A, devises 100 shares to his son, and the stock splits two for one, T's son is entitled to 200 shares, not 600.

Background on Section 6171 of Repealed Code

Section 6171 was a new provision added by 1983 Cal. Stat. ch. 842 § 55. For background on the provisions of this part, see the Comment to this part under the part heading.

§ 6172. Unpaid proceeds of sale, condemnation, or insurance; property obtained as a result of foreclosure

Comment. Section 6172 continues Section 6172 of the repealed Probate Code without change. This section is the same in substance as subdivision (a) of Section 2-608 of the Uniform Probate Code (1987) and is generally similar to prior California case law. See, e.g. Estate of Shubin, 252 Cal. App. 2d 588, 60 Cal. Rptr. 678 (1967); cf. Estate of Newsome, 248 Cal. App. 2d 712, 56 Cal. Rptr. 874 (1967). See also Sections 32 ("devise" defined), 62 ("property" defined). The rules stated in Section 6172 apply in the absence of a contrary intention of the testator. See Section 6165. Section 6172 does not apply if the testator died before January 1, 1985. See Section 6103. As to the application of any amendments made after that date, see Section 3.

The rules of nonademption in Sections 6172-6177 are not exclusive, and nothing in these provisions is intended to increase the incidence of ademption in California. See Section 6178.

Background on Section 6172 of Repealed Code

Section 6172 was a new provision added by 1983 Cal. Stat. ch. 842 § 55. For background on the provisions of this part, see the Comment to this part under the part heading.

§ 6173. Specifically devised property sold by conservator; proceeds of specifically devised property paid to conservator

Comment. Section 6173 continues Section 6173 of the repealed Probate Code without change. This section does not apply if the testator died before January 1, 1985. See Section 6103. As to the application of any amendments made after that date, see Section 3.

Subdivisions (a) and (b) are the same in substance as the first sentence of subdivision (b) of Section 2-608 of the Uniform Probate Code (1987) and are consistent with prior California case law. See Estate of Packham, 232 Cal. App. 2d 847, 43 Cal. Rptr. 318 (1965). As to the construction of provisions drawn from uniform acts, see Section 2. See also Sections 32 ("devise" defined), 62 ("property" defined). The rules stated in Section 6173 apply in the absence of a contrary intention of the testator. See Section 6165. See also Section 6178.

Subdivision (c) revises the corresponding Uniform Probate Code language to refer to the conservatorship being terminated rather than to it being "adjudicated that the disability of the testator has ceased." The application of subdivision (c) turns on whether a conservatorship has been terminated, and not on whether the testator has regained the capacity to make a will. Thus subdivision (c) provides a rule of administrative convenience and avoids the need to litigate the question of whether the

conservatee had capacity to make a will after the time of the sale, condemnation, fire, or casualty.

Subdivision (d) is the same in substance as the third sentence of subdivision (b) of Section 2-608 of the Uniform Probate Code (1987). As to the construction of provisions drawn from uniform acts, see Section 2.

Background on Section 6173 of Repealed Code

Section 6173 was a new provision added by 1983 Cal. Stat. ch. 842 § 55. For background on the provisions of this part, see the Comment to this part under the part heading.

§ 6174. Property given during testator's lifetime; ademption by satisfaction

Comment. Section 6174 continues Section 6174 of the repealed Probate Code without change. See also Section 11640 (hearing and order resolving questions arising under Section 6174). Section 6174 does not apply if the testator died before January 1, 1985. See Section 6103. As to the application of any amendments made after that date, see Section 3.

Subdivisions (a) and (b) are the same in substance as Section 2-612 of the Uniform Probate Code (1987). As to the construction of provisions drawn from uniform acts, see Section 2. For a comparable intestate succession rule concerning advancements, see Section 6409.

Background on Section 6174 of Repealed Code

Section 6174 was added by 1983 Cal. Stat. ch. 842 § 55. Subdivisions (a) and (b) were consistent with former Probate Code Section 1050 (repealed by 1983 Cal. Stat. ch. 842 § 44). Subdivision (b) changed the rule under former Probate Code Section 1052 (repealed by 1983 Cal. Stat. ch. 842 § 46), that, if the value of the property given is not established by the testator or acknowledged by the donee, it is valued as of the date of the gift. Under subdivision (b) of Section 6174, the gift was valued as of the time the devisee came into possession or enjoyment of the property or as of the time of death of the testator, whichever occurs first. Thus, if the devisee does not come into possession or enjoyment of the property until a time after the testator's death, the property would be valued as of the date of death. Subdivision (c) continued a provision of former Section 1052, but added the requirement that, if the donee's acknowledgment expresses the value of the gift, that value is binding on the court only if made contemporaneously with the gift. See also Sections 32 ("devise" defined), 34 ("devisee" defined), 62 ("property" defined). For background on the provisions of this part, see the Comment to this part under the part heading.

§ 6175. Contract by testator for sale or transfer of specifically devised property

Comment. Section 6175 continues Section 6175 of the repealed Probate Code without change. The rule stated in Section 6175 applies in the absence of a contrary intention of the testator. See Section 6165. See also Section 6178. This section does not apply if the testator died before

January 1, 1985. See Section 6103. As to the application of any amendments made after that date, see Section 3.

Background on Section 6175 of Repealed Code

Section 6175 was added by 1983 Cal. Stat. ch. 842 § 55. The section was drawn from former Probate Code Section 77 (repealed by 1983 Cal. Stat. ch. 842 § 18). See also Sections 32 ("devise" defined), 34 ("devisee" defined), 62 ("property" defined). For background on the provisions of this part, see the Comment to this part under the part heading.

§ 6176. Encumbrance on specifically devised property after execution of will

Comment. Section 6176 continues Section 6176 of the repealed Probate Code without change. The rule stated in Section 6176 applies in the absence of a contrary intention of the testator. See Section 6165. See also Section 6178. This section does not apply if the testator died before January 1, 1985. See Section 6103. As to the application of any amendments made after that date, see Section 3.

Background on Section 6176 of Repealed Code

Section 6176 was added by 1983 Cal. Stat. ch. 842 § 55. The section continued the substance of a portion of former Probate Code Section 78 (repealed by 1983 Cal. Stat. ch. 842 § 18). See also Sections 32 ("devise" defined), 34 ("devisee" defined), 62 ("property" defined). For background on the provisions of this part, see the Comment to this part under the part heading.

§ 6177. Alteration of testator's interest in specifically devised property after execution of will

Comment. Section 6177 continues Section 6177 of the repealed Probate Code without change. The rule stated in Section 6177 applies in the absence of a contrary intention of the testator. See Section 6165. See also Section 6178. This section does not apply if the testator died before January 1, 1985. See Section 6103. As to the application of any amendments made after that date, see Section 3.

Background on Section 6177 of Repealed Code

Section 6177 was added by 1983 Cal. Stat. ch. 842 § 55. The section continued the substance of a portion of former Probate Code Section 78 (repealed by 1983 Cal. Stat. ch. 842 § 18). See also Sections 32 ("devise" defined), 34 ("devisee" defined), 62 ("property" defined). For background on the provisions of this part, see the Comment to this part under the part heading.

§ 6178. Rules stated in Sections 6172 to 6177 not exhaustive

Comment. Section 6178 continues Section 6178 of the repealed Probate Code without change. This section recognizes that the rules stated in Sections 6172-6177 cover a number of special situations where a specific gift is not adeemed but do not cover all situations where a specific gift is not adeemed. This section also makes clear that the inclusion of these specific statutory rules is not intended to increase the

incidence of ademption in California. This section does not apply if the testator died before January 1, 1985. See Section 6103. As to the application of any amendments made after that date, see Section 3.

Background on Section 6178 of Repealed Code

Section 6178 was a new provision added by 1983 Cal. Stat. ch. 842 § 55. For background on the provisions of this part, see the Comment to this part under the part heading.

§ 6179. Death of decedent before January 1, 1985

Comment. Section 6179 continues Section 6179 of the repealed Probate Code without substantive change.

Background on Section 6179 of Repealed Code

Section 6179 was added by 1988 Cal. Stat. ch. 1199 § 76. The section restated former Probate Code Section 1055 (repealed by 1988 Cal. Stat. ch. 1199 § 55.5) without substantive change.

CHAPTER 6. CALIFORNIA STATUTORY WILL

Article 1. Definitions and Rules of Construction

§ 6200. Definitions and rules of construction that govern this chapter

Comment. Section 6200 continues Section 6200 of the repealed Probate Code without change. This section does not apply if the testator died before January 1, 1985. See Section 6103. As to the application of any amendments made after that date, see Section 3. See also Section 6247 (inclusion of clauses as existing on date of execution of will; statutory will executed on form prepared for use under prior law).

Background on Section 6200 of Repealed Code

Section 6200 was added by 1983 Cal. Stat. ch. 842 § 55. The section continued the substance of the introductory clause of former Probate Code Section 56 (repealed by 1983 Cal. Stat. ch. 842 § 18). For background on the provisions of this part, see the Comment to this part under the part heading.

§ 6201. "Testator"

Comment. Section 6201 continues Section 6201 of the repealed Probate Code without change. This section does not apply if the testator died before January 1, 1985. See Section 6103. As to the application of any amendments made after that date, see Section 3. See also Section 6247 (inclusion of clauses as existing on date of execution of will; statutory will executed on form prepared for use under prior law).

Background on Section 6201 of Repealed Code

Section 6201 was added by 1983 Cal. Stat. ch. 842 § 55. The section continued subdivision (a) of former Probate Code Section 56 (repealed by 1983 Cal. Stat. ch. 842 § 18). For background on the provisions of this part, see the Comment to this part under the part heading.

§ 6202. "Spouse"

Comment. Section 6202 continues Section 6202 of the repealed Probate Code without change. This section does not apply if the testator died before January 1, 1985. See Section 6103. As to the application of any amendments made after that date, see Section 3. See also Section 6247 (inclusion of clauses as existing on date of execution of will; statutory will executed on form prepared for use under prior law). As to the effect of termination of the marriage by dissolution or annulment after execution of the will, see Section 6226.

Background on Section 6202 of Repealed Code

Section 6202 was added by 1983 Cal. Stat. ch. 842 § 55. The section continued subdivision (b) of former Probate Code Section 56 (repealed by 1983 Cal. Stat. ch. 842 § 18). For background on the provisions of this part, see the Comment to this part under the part heading.

§ 6203. "Executor"

Comment. Section 6203 continues Section 6203 of the repealed Probate Code without change. This section does not apply if the testator died before January 1, 1985. See Section 6103. As to the application of any amendments made after that date, see Section 3. See also Section 6247 (inclusion of clauses as existing on date of execution of will; statutory will executed on form prepared for use under prior law).

Background on Section 6203 of Repealed Code

Section 6203 was added by 1983 Cal. Stat. ch. 842 § 55. The section continued subdivision (c) of former Probate Code Section 56 (repealed by 1983 Cal. Stat. ch. 842 § 18). For background on the provisions of this part, see the Comment to this part under the part heading.

§ 6204. "Trustee"

Comment. Section 6204 continues Section 6204 of the repealed Probate Code without change. This section does not apply if the testator died before January 1, 1985. See Section 6103. As to the application of any amendments made after that date, see Section 3. See also Section 6247 (inclusion of clauses as existing on date of execution of will; statutory will executed on form prepared for use under prior law).

Background on Section 6204 of Repealed Code

Section 6204 was added by 1983 Cal. Stat. ch. 842 § 55. The section continued subdivision (d) of former Probate Code Section 56 (repealed by 1983 Cal. Stat. ch. 842 § 18). For background on the provisions of this part, see the Comment to this part under the part heading.

§ 6205. "Descendants"

Comment. Section 6205 continues Section 6205 of the repealed Probate Code without change. This section applies the rules of construction of wills for determining the parent-child relationship. This

makes the construction of a California statutory will consistent with the construction of wills generally. This section applies to every California statutory will, including those executed before January 1, 1985. See Section 6247. As to the application of any amendments made after that date, see Section 3.

Background on Section 6205 of Repealed Code

Section 6205 was added by 1983 Cal. Stat. ch. 842 § 55 and was amended by 1984 Cal. Stat. ch. 892 § 33, 1985 Cal. Stat. ch. 359 § 5, and 1985 Cal. Stat. ch. 982 § 18. The section continued subdivision (e) of former Probate Code Section 56 (repealed by 1983 Cal. Stat. ch. 842 § 18). For background on the provisions of this part, see the Comment to this part under the part heading. The 1984 amendment revised Section 6205 to refer to the definitions of "parent" and "child" under Sections 26 and 54. The second sentence of Section 6205 (which was added by the 1984 amendment) continued subdivision (b) of former Probate Code Section 6206 (repealed by 1984 Cal. Stat. ch. 892 § 34). As to the 1984 amendment, see *Recommendation Relating to Revision of Wills and Intestate Succession Law*, 17 Cal. L. Revision Comm'n Reports 537 (1984). The 1985 amendment substituted the reference to Section 6152 (rules of construction for wills) for the former reference to the definitions of child and parent in Sections 26 and 54. Formerly Section 6205 applied the intestate succession rules for determining the parent-child relationship (see former Sections 6408, 6408.5) because Sections 26 and 54 incorporated those rules. As to the 1985 amendment, see *Communication Concerning Assembly Bill 196*, 18 Cal. L. Revision Comm'n Reports 367, 374 (1986).

§ 6206. Reference to Uniform Gifts to Minors Act

Comment. Section 6206 continues Section 6206 of the repealed Probate Code without change. This section applies to every California statutory will, including those executed before January 1, 1985. See Section 6247. As to the application of any amendments made after that date, see Section 3.

Background on Section 6206 of Repealed Code

Section 6206 was added by 1984 Cal. Stat. ch. 892 § 35. The section was added in recognition that the Uniform Gifts to Minors Act (1966) had been superseded by the Uniform Transfers to Minors Act (1986). See also Sections 6245, 6246. See *Communication of Law Revision Commission Concerning Assembly Bill 2290*, 18 Cal. L. Revision Comm'n Reports 77, 88 (1986). See also *Recommendation Relating to Revision of Wills and Intestate Succession Law*, 17 Cal. L. Revision Comm'n Reports 537 (1984).

§ 6207. Masculine pronouns; plural and singular words

Comment. Section 6207 continues Section 6207 of the repealed Probate Code without change. This section does not apply if the testator died before January 1, 1985. See Section 6103. As to the application of any amendments made after that date, see Section 3. See also Section 6247 (inclusion of clauses as existing on date of execution of will; statutory will executed on form prepared for use under prior law).

Background on Section 6207 of Repealed Code

Section 6207 was added by 1983 Cal. Stat. ch. 842 § 55. The section continued subdivision (g) of former Probate Code Section 56 (repealed by 1983 Cal. Stat. ch. 842 § 18). For background on the provisions of this part, see the Comment to this part under the part heading.

§ 6208. Use of "shall" or "may" in statutory will

Comment. Section 6208 continues Section 6208 of the repealed Probate Code without change. This section does not apply if the testator died before January 1, 1985. See Section 6103. As to the application of any amendments made after that date, see Section 3. See also Section 6247 (inclusion of clauses as existing on date of execution of will; statutory will executed on form prepared for use under prior law).

Background on Section 6208 of Repealed Code

Section 6208 was added by 1983 Cal. Stat. ch. 842 § 55. The section continued the substance of subdivision (h) of former Probate Code Section 56 (repealed by 1983 Cal. Stat. ch. 842 § 18). For background on the provisions of this part, see the Comment to this part under the part heading.

§ 6209. Manner of distribution to "descendants"

Comment. Section 6209 continues Section 6209 of the repealed Probate Code without change. The rule stated in Section 6209 is consistent with the general rule concerning taking by representation. See Section 240 (representation). Section 6209 does not apply if the testator died before January 1, 1985. See Section 6103. As to the application of any amendments made after that date, see Section 3. See also Section 6247 (inclusion of clauses as existing on date of execution of will; statutory will executed on form prepared for use under prior law).

Background on Section 6209 of Repealed Code

Section 6209 was added by 1983 Cal. Stat. ch. 842 § 55. The section continued the substance of subdivision (i) of former Probate Code Section 56 (repealed by 1983 Cal. Stat. ch. 842 § 18). For background on the provisions of this part, see the Comment to this part under the part heading.

§ 6210. "Person"

Comment. Section 6210 continues Section 6210 of the repealed Probate Code without change. This section does not apply if the testator died before January 1, 1985. See Section 6103. As to the application of any amendments made after that date, see Section 3. See also Section 6247 (inclusion of clauses as existing on date of execution of will; statutory will executed on form prepared for use under prior law).

Background on Section 6210 of Repealed Code

Section 6210 was added by 1983 Cal. Stat. ch. 842 § 55. The section continued subdivision (j) of former Probate Code Section 56 (repealed by 1983 Cal. Stat. ch. 842 § 18). For background on the provisions of this part, see the Comment to this part under the part heading.

Article 2. General Provisions

§ 6220. Persons who may execute statutory wills

Comment. Section 6220 continues Section 6220 of the repealed Probate Code without change. An emancipated minor is considered as being over the age of majority for the purpose of making or revoking a will. See Civil Code § 63. Section 6220 does not apply if the testator died before January 1, 1985. See Section 6103. As to the application of any amendments made after that date, see Section 3. See also Section 6247 (inclusion of clauses as existing on date of execution of will; statutory will executed on form prepared for use under prior law).

Background on Section 6220 of Repealed Code

Section 6220 was added by 1983 Cal. Stat. ch. 842 § 55. The section continued the substance of former Probate Code Section 56.1 (repealed by 1983 Cal. Stat. ch. 842 § 18). For background on the provisions of this part, see the Comment to this part under the part heading.

§ 6221. Execution procedure

Comment. Section 6221 continues Section 6221 of the repealed Probate Code without change. This section does not apply if the testator died before January 1, 1985. See Section 6103. As to the application of any amendments made after that date, see Section 3. See also Section 6247 (inclusion of clauses as existing on date of execution of will; statutory will executed on form prepared for use under prior law).

Background on Section 6221 of Repealed Code

Section 6221 was added by 1983 Cal. Stat. ch. 842 § 55. The section continued the substance of a portion of former Probate Code Section 56.2 (repealed by 1983 Cal. Stat. ch. 842 § 18). For background on the provisions of this part, see the Comment to this part under the part heading.

§ 6221.5. Execution of attestation clause

Comment. Section 6221.5 continues Section 6221.5 of the repealed Probate Code without change. This section does not apply if the testator died before January 1, 1985. See Section 6103. As to the application of any amendments made after that date, see Section 3. See also Section 6247 (inclusion of clauses as existing on date of execution of will; statutory will executed on form prepared for use under prior law).

Background on Section 6221.5 of Repealed Code

Section 6221.5 was added by 1983 Cal. Stat. ch. 842 § 55 and was amended by 1988 Cal. Stat. ch. 1199 § 76.5. The section continued the last sentence of former Probate Code Section 56.2 (repealed by 1983 Cal. Stat. ch. 842 § 18). For background on the provisions of this part, see the Comment to this part under the part heading. The 1988 amendment corrected a cross-reference to another section. As to the 1988 amendment, see *Comments to Conforming Revisions and Repeals*, 19 Cal. L. Revision Comm'n Reports 1031, 1090 (1988).

§ 6222. Types of statutory wills; contents

Comment. Section 6222 continues Section 6222 of the repealed Probate Code without change. This section does not apply if the testator died before January 1, 1985. See Section 6103. As to the application of any amendments made after that date, see Section 3. See also Section 6247 (inclusion of clauses as existing on date of execution of will; statutory will executed on form prepared for use under prior law).

Background on Section 6222 of Repealed Code

Section 6222 was added by 1983 Cal. Stat. ch. 842 § 55. The section continued the substance of former Probate Code Section 56.3 (repealed by 1983 Cal. Stat. ch. 842 § 18). For background on the provisions of this part, see the Comment to this part under the part heading.

§ 6223. Selection of more than one or no property disposition clause

Comment. Section 6223 continues Section 6223 of the repealed Probate Code without change. This section does not apply if the testator died before January 1, 1985. See Section 6103. As to the application of any amendments made after that date, see Section 3. See also Section 6247 (inclusion of clauses as existing on date of execution of will; statutory will executed on form prepared for use under prior law).

Background on Section 6223 of Repealed Code

Section 6223 was added by 1983 Cal. Stat. ch. 842 § 55. The section continued former Probate Code Section 56.4 (repealed by 1983 Cal. Stat. ch. 842 § 18). For background on the provisions of this part, see the Comment to this part under the part heading.

§ 6224. Titles of clauses disregarded

Comment. Section 6224 continues Section 6224 of the repealed Probate Code without change. This section does not apply if the testator died before January 1, 1985. See Section 6103. As to the application of any amendments made after that date, see Section 3. See also Section 6247 (inclusion of clauses as existing on date of execution of will; statutory will executed on form prepared for use under prior law).

Background on Section 6224 of Repealed Code

Section 6224 was added by 1983 Cal. Stat. ch. 842 § 55. The section continued former Probate Code Section 56.5 (repealed by 1983 Cal. Stat. ch. 842 § 18). For background on the provisions of this part, see the Comment to this part under the part heading.

§ 6225. Revocation or amendment of statutory will

Comment. Section 6225 continues Section 6225 of the repealed Probate Code without change. This section does not apply if the testator died before January 1, 1985. See Section 6103. As to the application of any amendments made after that date, see Section 3. See also Section

6247 (inclusion of clauses as existing on date of execution of will; statutory will executed on form prepared for use under prior law).

Background on Section 6225 of Repealed Code

Section 6225 was added by 1983 Cal. Stat. ch. 842 § 55. The section continued former Probate Code Section 56.6 (repealed by 1983 Cal. Stat. ch. 842 § 18). For background on the provisions of this part, see the Comment to this part under the part heading.

§ 6226. Effect of dissolution or annulment of testator's marriage

Comment. Section 6226 continues Section 6226 of the repealed Probate Code without substantive change.

Background on Section 6226 of Repealed Code

Section 6226 was added by 1983 Cal. Stat. ch. 842 § 55 and was amended by 1984 Cal. Stat. ch. 892 § 36. Section 6226 was a new provision drawn from and consistent with Section 6122. See the Comment to Section 6122. For background on the provisions of this part, see the Comment to this part under the part heading. The 1984 amendment revised subdivision (d) so that Section 6226 did not apply to a case where the final judgment of dissolution or annulment of marriage occurred before January 1, 1985. This made Section 6226 consistent with subdivision (f) of Section 6122. See *Communication of Law Revision Commission Concerning Assembly Bill 2290,* 18 Cal. L. Revision Comm'n Reports 77, 88 (1986). As to the application of any amendments made after that date, see Section 3.

Article 3. Form and Full Text of Clauses

§ 6240. California statutory will form

Comment. Section 6240 continues Section 6240 of the repealed Probate Code without change. This section does not apply if the testator died before January 1, 1985. See Section 6103. As to the application of any amendments made after that date, see Section 3. See also Section 6247 (inclusion of clauses as existing on date of execution of will; statutory will executed on form prepared for use under prior law).

Background on Section 6240 of Repealed Code

Section 6240 was added by 1983 Cal. Stat. ch. 842 § 55. The section continued the substance of former Probate Code Section 56.7 (repealed by 1983 Cal. Stat. ch. 842 § 18). The language in parentheses in paragraph 3.3 concerning bond was new. For background on the provisions of this part, see the Comment to this part under the part heading.

§ 6241. California statutory will with trust form

Comment. Section 6241 continues Section 6241 of the repealed Probate Code without change. This section does not apply if the testator died before January 1, 1985. See Section 6103. As to the application of any amendments made after that date, see Section 3. See also Section 6247 (inclusion of clauses as existing on date of execution of will; statutory will executed on form prepared for use under prior law).

Background on Section 6241 of Repealed Code

Section 6241 was added by 1983 Cal. Stat. ch. 842 § 55. The section continued the substance of former Probate Code Section 56.8 (repealed by 1983 Cal. Stat. ch. 842 § 18). The language in parentheses in paragraph 3.4 concerning bond was new. For background on the provisions of this part, see the Comment to this part under the part heading.

§ 6242. Full text of paragraph 2.1 of all California statutory wills

Comment. Section 6242 continues Section 6242 of the repealed Probate Code without change. This section does not apply if the testator died before January 1, 1985. See Section 6103. As to the application of any amendments made after that date, see Section 3. See also Section 6247 (inclusion of clauses as existing on date of execution of will; statutory will executed on form prepared for use under prior law). See also Sections 230-234 (proceeding to determine survival).

Background on Section 6242 of Repealed Code

Section 6242 was added by 1983 Cal. Stat. ch. 842 § 55. The section was the same as former Probate Code Section 56.9 (repealed by 1983 Cal. Stat. ch. 842 § 18). For background on the provisions of this part, see the Comment to this part under the part heading.

§ 6243. Full text of property disposition clauses of California statutory will form

Comment. Section 6243 continues Section 6243 of the repealed Probate Code with the addition of language in subdivision (c) that provides for the distribution of the residuary estate according to the laws relating to intestate succession "of property not acquired from a predeceased spouse." This revision restores the substance of the language found in the provision when it was enacted as Probate Code Section 56.10 by 1982 Cal. Stat. ch. 1401, § 1 (later repealed by 1983 Cal. Stat. ch. 842).

Section 6243 applies to every California statutory will, including those executed before January 1, 1985. See Section 6247. As to the application of any amendments made after that date, see Section 3. See also Sections 230-234 (proceeding to determine survival).

Background on Section 6243 of Repealed Code

Section 6243 was added by 1983 Cal. Stat. ch. 842 § 55. The section continued the substance of former Probate Code Section 56.10 (repealed by 1983 Cal. Stat. ch. 842 § 18) except that the provision in the last paragraph of former Section 56.10 adopting the laws relating to the succession of separate property not acquired from a parent, grandparent, or predeceased spouse was replaced by a reference to the law relating to intestate succession. This change permitted community property and quasi-community property to be governed by the intestate succession rules applicable to that property and was based on the assumption that the special provisions relating to succession of property acquired from ancestors would not be continued. For background on the provisions of this part, see the Comment to this part under the part heading.

§ 6244. Full text of property disposition clauses of California statutory will with trust form

Comment. Section 6244 continues Section 6244 of the repealed Probate Code without change. This section does not apply if the testator died before January 1, 1985. See Section 6103. As to the application of any amendments made after that date, see Section 3. See also Section 6247 (inclusion of clauses as existing on date of execution of will; statutory will executed on form prepared for use under prior law). See also Sections 230-234 (proceeding to determine survival).

Background on Section 6244 of Repealed Code

Section 6244 was added by 1983 Cal. Stat. ch. 842 § 55. The section continued former Probate Code Section 56.11 (repealed by 1983 Cal. Stat. ch. 842 § 18). For background on the provisions of this part, see the Comment to this part under the part heading.

§ 6245. Mandatory clauses of all California statutory wills

Comment. Section 6245 continues Section 6245 of the repealed Probate Code with the addition of language in subdivision (a) that provides for the distribution of the residuary estate according to the laws relating to intestate succession "of property not acquired from a predeceased spouse." This revision restores the substance of the language found in the provision when it was enacted as Probate Code Section 56.12 by 1982 Cal. Stat. ch. 1401 § 1 (later repealed by 1983 Cal. Stat. ch. 842).

This section applies to every California statutory will, including those executed before January 1, 1985. See Section 6247. As to the application of any amendments made after that date, see Section 3.

Background on Section 6245 of Repealed Code

Section 6245 was added by 1983 Cal. Stat. ch. 842 § 55 and was amended by 1984 Cal. Stat. ch. 243 § 9.2. The section continued the substance of former Probate Code Section 56.12 (repealed by 1983 Cal. Stat. ch. 842 § 18) except that the provision of the former law adopting the laws relating to the succession of separate property not acquired from a parent, grandparent, or predeceased spouse was replaced by a reference to the law relating to intestate succession. The reason for this change is stated in the Comment to Section 6243. For background on the provisions of this part, see the Comment to this part under the part heading. The 1984 amendment added a reference to the Uniform Transfers to Minors Act of any state. See *Recommendation Relating to Uniform Transfers to Minors Act*, 17 Cal. L. Revision Comm'n Reports 601 (1984). See also *Recommendation Relating to Revision of Wills and Intestate Succession Law*, 17 Cal. L. Revision Comm'n Reports 537 (1984).

§ 6246. Additional mandatory clauses for California statutory will with trust form

Comment. Section 6246 continues Section 6246 of the repealed Probate Code with the addition of language in subdivision (a) that provides for the distribution of the residuary estate according to the laws

relating to intestate succession "of property not acquired from a predeceased spouse." This revision restores the substance of the language found in the provision when it was enacted as Probate Code Section 56.13 by 1982 Cal. Stat. ch. 1401 § 1 (later repealed by 1983 Cal. Stat. ch. 842).

This section applies to every California statutory will, including those executed before January 1, 1985. See Section 6247. As to the application of any amendments made after that date, see Section 3.

Background on Section 6246 of Repealed Code

Section 6246 was added by 1983 Cal. Stat. ch. 842 § 55 and was amended by 1984 Cal. Stat. ch. 243 § 9.3 and 1987 Cal. Stat. ch. 923 § 85.3. The section continued former Probate Code Section 56.13 (repealed by 1983 Cal. Stat. ch. 842 § 18) with technical revisions. The provision of former law adopting the law relating to succession of separate property not acquired from a parent, grandparent, or predeceased spouse was replaced by a reference to the law relating to intestate succession. The reason for this change is stated in the Comment to Section 6243. For background on the provisions of this part, see the Comment to this part under the part heading. The 1984 amendment added a reference to the Uniform Transfers to Minors Act of any state. Concerning the 1984 amendment, see *Recommendation Relating to Uniform Transfers to Minors Act,* 17 Cal. L. Revision Comm'n Reports 601 (1984). See also *Recommendation Relating to Revision of Wills and Intestate Succession Law,* 17 Cal. L. Revision Comm'n Reports 537 (1984). The 1987 amendment corrected a cross-reference in subdivision (b). As to the 1987 amendment, see *Communication from California Law Revision Commission Concerning Assembly Bill 708,* 19 Cal. L. Revision Comm'n Reports 545, 559 (1988).

§ 6247. Will includes only texts of clauses as they exist when will executed

Comment. Section 6247 continues the substance of Section 6247 of the repealed Probate Code with the addition of references in subdivision (b) to Sections 6243, 6245, and 6246. Those sections have been revised to restore the substance of the language found in the provisions when they were enacted by 1982 Cal. Stat. ch. 1401, § 1 (later repealed by 1983 Cal. Stat. ch. 842).

Subdivision (c) validates California statutory wills executed on or after January 1, 1985, on a form prepared for use under the prior law; such wills are governed by the prior law except as provided in subdivision (b). Subdivision (d) makes clear that a California statutory will executed on a form which incorporates a reference to former Section 1120.2 of the repealed Probate Code is not invalid for that reason. Section 6247 does not apply if the testator died before January 1, 1985. See Section 6103. As to the application of any amendments made after that date, see Section 3. See also Section 6226(d) (effect of marriage dissolution or annulment on disposition and nomination provisions).

Background on Section 6247 of Repealed Code

Section 6247 was added by 1983 Cal. Stat. ch. 842 § 55 and was amended by 1984 Cal. Stat. ch. 892 § 37 and 1987 Cal. Stat. ch. 923 § 85.7. Subdivision (a) continued the substance of former Probate Code Section 56.14 (repealed by 1983 Cal. Stat. ch. 842 § 18). For background on the provisions of this part, see the Comment to this part under the part heading. The 1984 amendment added subdivisions (b) and (c). See *Communication of Law Revision Commission Concerning Assembly Bill 2290*, 18 Cal. L. Revision Comm'n Reports 77, 88-89 (1986). See also *Recommendation Relating to Revision of Wills and Intestate Succession Law*, 17 Cal. L. Revision Comm'n Reports 537 (1984). The 1987 amendment added subdivision (d). See *Communication from California Law Revision Commission Concerning Assembly Bill 708*, 19 Cal. L. Revision Comm'n Reports 545, 559 (1988).

§ 6248. Application of general law

Comment. Section 6248 continues Section 6248 of the repealed Probate Code without change. This section makes clear that, except as provided in this chapter, general law applies to a California statutory will. Section 6248 does not apply if the testator died before January 1, 1985. See Section 6103. As to the application of any amendments made after that date, see Section 3. See also Section 6247 (inclusion of clauses as existing on date of execution of will; statutory will executed on form prepared for use under prior law).

Background on Section 6248 of Repealed Code

Section 6248 was added by 1983 Cal. Stat. ch. 842 § 55 and was amended by 1984 Cal. Stat. ch. 892 § 38. The section was drawn from Section 2 of 1982 Cal. Stat. ch. 1401. For background on the provisions of this part, see the Comment to this part under the part heading. The 1984 amendment revised the language of the section to make clear that, except as provided in this chapter, general law applies to a California statutory will. See *Recommendation Relating to Revision of Wills and Intestate Succession Law*, 17 Cal. L. Revision Comm'n Reports 537 (1984).

CHAPTER 7. UNIFORM TESTAMENTARY ADDITIONS TO TRUSTS ACT

§ 6300. Testamentary additions to trusts

Comment. Section 6300 continues Section 6300 of the repealed Probate Code without substantive change. This section is the same in substance as Section 2-511 of the Uniform Probate Code (1987), except that Section 6300 permits the trust to be amended after the testator's death unless the testator's will provides that it may not be amended with respect to the testamentary assets. As to the construction of provisions drawn from uniform acts, see Section 2. See also Section 32 ("devise" means a disposition of real or personal property by will). Section 6300 does not apply if the testator died before January 1, 1985. See Section 6103. As to the application of any amendments made after that date, see Section 3. This chapter does not invalidate any devise made by a will executed prior to September 17, 1965. See Section 6301.

Background on Section 6300 of Repealed Code

Section 6300 was added by 1983 Cal. Stat. ch. 842 § 55 and was amended by 1984 Cal. Stat. ch. 892 § 39. The section continued the substance of former Probate Code Section 170 (repealed by 1983 Cal. Stat. ch. 842 § 18). For background on the provisions of this part, see the Comment to this part under the part heading. The 1984 amendment changed the former rule that with respect to the testamentary assets the trust may not be amended after the testator's death unless the testator's will so provides. Under the rule established by the 1984 amendment, the trust may be amended after the testator's death unless the testator's will provides that it may not be amended with respect to the testamentary assets. See *Recommendation Relating to Revision of Wills and Intestate Succession Law*, 17 Cal. L. Revision Comm'n Reports 537 (1984).

§ 6301. Chapter does not invalidate devise made by will executed before September 17, 1965

Comment. Section 6301 continues Section 6301 of the repealed Probate Code without change. This section does not apply if the testator died before January 1, 1985. See Section 6103. As to the application of any amendments made after that date, see Section 3.

Background on Section 6301 of Repealed Code

Section 6301 was added by 1983 Cal. Stat. ch. 842 § 55. The section continued the substance of former Probate Code Section 171 (repealed by 1983 Cal. Stat. ch. 842 § 18). September 17, 1965, was effective date of former Sections 170-173. See also Section 32 ("devise" means a disposition of real or personal property by will). For background on the provisions of this part, see the Comment to this part under the part heading.

§ 6303. Chapter citation

Comment. Section 6303 continues Section 6303 of the repealed Probate Code without change. This section does not apply if the testator died before January 1, 1985. See Section 6103. As to the application of any amendments made after that date, see Section 3.

Background on Section 6303 of Repealed Code

Section 6303 was added by 1983 Cal. Stat. ch. 842 § 55. The section continued former Probate Code Section 173 (repealed by 1983 Cal. Stat. ch. 842 § 18). For background on the provisions of this part, see the Comment to this part under the part heading.

CHAPTER 8. TRUST FOR INSURANCE OR EMPLOYEE BENEFITS

§ 6320. Definitions

Comment. Section 6320 continues Section 6320 of the repealed Probate Code without change.

Background on Section 6320 of Repealed Code

Section 6320 was added by 1983 Cal. Stat. ch. 842 § 55. The section was drawn from former Probate Code Section 175 (repealed by 1983 Cal. Stat. ch. 842 § 18), but the language of paragraph (3) of Section 6320 was substituted for the former reference

to the Self Employed Individuals' Tax Retirement Act of 1962. Subdivision (b) was new and was included for convenience in drafting. For background on the provisions of this part, see the Comment to this part under the part heading.

§ 6321. Designation of trustee as beneficiary, payee, or owner

Comment. Section 6321 continues Section 6321 of the repealed Probate Code without change.

Background on Section 6321 of Repealed Code

Section 6321 was added by 1983 Cal. Stat. ch. 842 § 55. The section continued a portion of former Probate Code Section 175 (repealed by 1983 Cal. Stat. ch. 842 § 18). For background on the provisions of this part, see the Comment to this part under the part heading.

§ 6322. Required provision in designator's will

Comment. Section 6322 continues Section 6322 of the repealed Probate Code without change.

Background on Section 6322 of Repealed Code

Section 6322 was added by 1983 Cal. Stat. ch. 842 § 55. The section continued former Probate Code Section 176 (repealed by 1983 Cal. Stat. ch. 842 § 18). For background on the provisions of this part, see the Comment to this part under the part heading.

§ 6323. Payment or transfer to trustee without administration

Comment. Section 6323 continues Section 6323 of the repealed Probate Code without substantive change.

Background on Section 6323 of Repealed Code

Section 6323 was added by 1983 Cal. Stat. ch. 842 § 55. The section continued former Probate Code Section 177 (repealed by 1983 Cal. Stat. ch. 842 § 18). For background on the provisions of this part, see the Comment to this part under the part heading.

§ 6324. Effect of designator's debts

Comment. Section 6324 continues Section 6324 of the repealed Probate Code without change.

Background on Section 6324 of Repealed Code

Section 6324 was added by 1983 Cal. Stat. ch. 842 § 55. The section continued former Probate Code Section 178 (repealed by 1983 Cal. Stat. ch. 842 § 18). For background on the provisions of this part, see the Comment to this part under the part heading.

§ 6325. Jurisdiction of court

Comment. Section 6325 continues Section 6325 of the repealed Probate Code without substantive change. For general provisions, see Sections 1000-1004 (rules of practice), 1020-1023 (petitions and other papers), 1040-1050 (hearings and orders). For general provisions relating to notice of hearing, see Sections 1200-1221. See also Sections 1250-1252 (request for special notice), 1260-1265 (proof of giving notice).

Background on Section 6325 of Repealed Code

Section 6325 was added by 1983 Cal. Stat. ch. 842 § 55 and was amended by 1986 Cal. Stat. ch. 820 § 37. The section continued the substance of former Probate Code Section 179 (repealed by 1983 Cal. Stat. ch. 842 § 18). For background on the provisions of this part, see the Comment to this part under the part heading.

The 1986 amendment corrected cross-references and made other technical revisions. For changes in the law applicable to trust administration, see the Comments to the new sections referred to in Section 6325. Subdivision (a)(11) was amended to replace the reference to "assets" with "property"; this was a non-substantive change. See Section 62 ("property" defined). See also *Recommendation Proposing the Trust Law*, 18 Cal. L. Revision Comm'n Reports 501, 787-88 (1986).

§ 6326. Applicability of Division 9

Comment. Section 6326 continues Section 6326 of the repealed Probate Code without change.

Background on Section 6326 of Repealed Code

Section 6326 was added by 1983 Cal. Stat. ch. 842 § 55 and was amended by 1986 Cal. Stat. ch. 820 § 38. The section continued former Probate Code Section 180 (repealed by 1983 Cal. Stat. ch. 842 § 18). For background on the provisions of this part, see the Comment to this part under the part heading. The 1986 amendment revised the reference to refer to the statute governing trust administration. See *Recommendation Proposing the Trust Law*, 18 Cal. L. Revision Comm'n Reports 501, 788 (1986).

§ 6327. Appealable orders

Comment. Section 6327 continues Section 6327 of the repealed Probate Code without change.

Background on Section 6327 of Repealed Code

Section 6327 was added by 1983 Cal. Stat. ch. 842 § 55 and was amended by 1986 Cal. Stat. ch. 820 § 39, 1987 Cal. Stat. ch. 923 § 86, and 1988 Cal. Stat. ch. 1199 § 77. The section continued the substance of former Probate Code Section 181 (repealed by 1983 Cal. Stat. ch. 842 § 18). For background on the provisions of this part, see the Comment to this part under the part heading. The 1986 amendment to Section 6327 conformed the section to the revisions of Section 1240 and added subdivision (c). See the Comment to Section 1240. See also *Recommendation Proposing the Trust Law*, 18 Cal. L. Revision Comm'n Reports 501, 789 (1986). The 1987 amendment revised the cross-reference to former Section 1240. As to the 1987 amendment, see *Communication from California Law Revision Commission Concerning Assembly Bill 708*, 19 Cal. L. Revision Comm'n Reports 545, 559 (1988). See also *Comments to Conforming Revisions and Repeals*, 19 Cal. L. Revision Comm'n Reports 391, 449 (1988). The 1988 amendment corrected a section reference. As to the 1988 amendment, see *Comments to Conforming Revisions and Repeals*, 19 Cal. L. Revision Comm'n Reports 1031, 1090 (1988).

§ 6328. Absence of qualified trustee

Comment. Section 6328 continues Section 6328 of the repealed Probate Code without change.

Background on Section 6328 of Repealed Code

Section 6328 was added by 1983 Cal. Stat. ch. 842 § 55. The section continued the substance of former Probate Code Section 182 (repealed by 1983 Cal. Stat. ch. 842 §

18). For background on the provisions of this part, see the Comment to this part under the part heading.

§ 6329. No effect on other trusts

Comment. Section 6329 continues Section 6329 of the repealed Probate Code without change.

Background on Section 6329 of Repealed Code

Section 6329 was added by 1983 Cal. Stat. ch. 842 § 55. The section continued a portion of former Probate Code Section 184 (repealed by 1983 Cal. Stat. ch. 842 § 18). For background on the provisions of this part, see the Comment to this part under the part heading.

§ 6330. Chapter as restatement and continuation of former law

Comment. Section 6330 continues Section 6330 of the repealed Probate Code without change. The first sentence of Section 6330 is consistent with subdivision (a) of Section 2 of the Probate Code.

Background on Section 6330 of Repealed Code

Section 6330 was a new provision added by 1984 Cal. Stat. ch. 892 § 39.3. See *Communication of Law Revision Commission Concerning Assembly Bill 2290*, 18 Cal. L. Revision Comm'n Reports 77, 89 (1986).

CHAPTER 9. DEVISE SUBJECT TO CALIFORNIA UNIFORM TRANSFERS TO MINORS ACT

§ 6341. Devised property paid, delivered, or transferred to custodian subject to Uniform Gifts to Minors Act or Uniform Transfers to Minors Act

Comment. Section 6341 continues Section 6341 of the repealed Probate Code without substantive change. Subdivision (a) makes the California Uniform Transfers to Minors Act applicable to a devise to a minor that the will makes subject to either the Uniform Transfers to Minors Act (1986) or to the superseded Uniform Gifts to Minors Act (1966). This avoids the requirement that a previously executed will be modified to substitute a reference to the Uniform Transfers to Minors Act in place of a reference to the superseded Uniform Gifts to Minors Act.

Background on Section 6341 of Repealed Code

Section 6341 was added by 1983 Cal. Stat. ch. 842 § 55 and was amended by 1984 Cal. Stat. ch. 243 § 11. The section as enacted continued the substance of former Probate Code Section 186.1 (repealed by 1983 Cal. Stat. ch. 842 § 18). See also Section 32 ("devise" means disposition of real or personal property by will). For background on the provisions of this part, see the Comment to this part under the part heading.

The 1984 amendment made a number of revisions and additions to Section 6341:

(1) The introductory clause was revised so that the section applied whether the testator's will referred to the California Uniform Transfers to Minors Act or to the superseded California Uniform Gifts to Minors Act.

(2) Subdivision (a) was revised to make the California Uniform Transfers Act applicable to a devise to a minor that the will makes subject to either the superseded act or the new Uniform Act.

(3) Subdivision (b) was added. This subdivision continued the substance of former Probate Code Section 6343 (repealed by 1984 Cal. Stat. ch. 243 § 13), but subdivision (b) did not apply unless the beneficiary had attained the age at which the custodianship was to terminate, which age could be older than 18 if the will so provided. See Sections 3920, 3920.5. Former Probate Code Section 6343 continued the substance of former Probate Code Section 186.3 (repealed by 1983 Cal. Stat. ch. 842 § 18).

(4) Subdivisions (c) and (d) were added. Subdivision (c) continued the substance of former Probate Code Section 6344 (repealed by 1984 Cal. Stat. ch. 243 § 14). Former Probate Code Section 6344 continued the substance of former Probate Code Section 186.4 (repealed by 1983 Cal. Stat. ch. 842 § 18). Subdivision (d) continued the substance of former Probate Code Section 6346 (repealed by 1984 Cal. Stat. ch. 243 § 15). Former Probate Code Section 6346 continued the substance of former Probate Code Section 186.6 (repealed by 1983 Cal. Stat. ch. 842 § 18).

Concerning the 1984 amendment, see *Recommendation Relating to Uniform Transfers to Minors Act*, 17 Cal. L. Revision Comm'n Reports 601 (1984).

§ 6345. Successor or substitute custodians; compensation

Comment. Section 6345 continues Section 6345 of the repealed Probate Code without substantive change.

Background on Section 6345 of Repealed Code

Section 6345 was added by 1983 Cal. Stat. ch. 842 § 55 and was amended by 1985 Cal. Stat. ch. 90 § 2. The section continued the substance of former Probate Code Section 186.5 (repealed by 1983 Cal. Stat. ch. 842 § 18). For background on the provisions of this part, see the Comment to this part under the part heading. The 1985 amendment made a technical, nonsubstantive revision.

§ 6347. Notice to and participation of custodian

Comment. Section 6347 continues Section 6347 of the repealed Probate Code without change.

Background on Section 6347 of Repealed Code

Section 6347 was added by 1983 Cal. Stat. ch. 842 § 55. The section continued the substance of former Probate Code Section 186.7 (repealed by 1983 Cal. Stat. ch. 842 § 18). See also Section 34 ("devisee" means a person designated in a will to receive a devise of real or personal property). For background on the provisions of this part, see the Comment to this part under the part heading.

§ 6348. Jurisdiction of court

Comment. Section 6348 continues Section 6348 of the repealed Probate Code without change.

Background on Section 6348 of Repealed Code

Section 6348 was added by 1983 Cal. Stat. ch. 842 § 55 and was amended by 1984 Cal. Stat. ch. 243 § 16. The section continued the substance of former Probate Code Section 186.8 (repealed by 1983 Cal. Stat. ch. 842 § 18). For background on the provisions of this part, see the Comment to this part under the part heading. The 1984 amendment substituted a reference to the California Uniform Transfers to Minors Act in place of the reference to the superseded California Uniform Gifts to Minors Act and

deleted the phrase "in the same manner as if it had been a lifetime gift." The deleted phrase was unnecessary since the new Uniform Act covered gifts made by will. See Section 3905. Concerning the 1984 amendment, see *Recommendation Relating to Uniform Transfers to Minors Act*, 17 Cal. L. Revision Comm'n Reports 601 (1984).

§ 6349. Construction of chapter

Comment. Section 6349 continues Section 6349 of the repealed Probate Code without change. Subdivision (b) makes clear that nothing in this chapter limits the California Uniform Transfers to Minors Act. See, e.g., Section 3906 (transfer to custodian by executor or administrator in the absence of a will or under a will that does not contain an authorization to do so).

Background on Section 6349 of Repealed Code

Section 6349 was added by 1983 Cal. Stat. ch. 842 § 55 and was amended by 1984 Cal. Stat. ch. 243 § 17. The section continued the substance of former Probate Code Section 186.9 (repealed by 1983 Cal. Stat. ch. 842 § 18). For background on the provisions of this part, see the Comment to this part under the part heading. The 1984 amendment added subdivision (b). Concerning the 1984 amendment, see *Recommendation Relating to Uniform Transfers to Minors Act*, 17 Cal. L. Revision Comm'n Reports 601 (1984).

CHAPTER 11. UNIFORM INTERNATIONAL WILLS ACT

§ 6380. Definitions

Comment. Section 6380 continues Section 6380 of the repealed Probate Code without change. This section is the same in substance as Section 2-1001 of the Uniform Probate Code (1987) (Uniform International Wills Act). As to the construction of provisions drawn from uniform acts, see Section 2.

Background on Section 6380 of Repealed Code.

Section 6380 was added by 1983 Cal. Stat. ch. 842 § 55. The section continued former Probate Code Section 60 (repealed by 1983 Cal. Stat. ch. 842 § 18). For background on the provisions of this part, see the Comment to this part under the part heading.

§ 6381. Validity of international will; application of chapter

Comment. Section 6381 continues Section 6381 of the repealed Probate Code without change. This section is the same in substance as Section 2-1002 of the Uniform Probate Code (1987) (Uniform International Wills Act). As to the construction of provisions drawn from uniform acts, see Section 2.

Background on Section 6381 of Repealed Code

Section 6381 was added by 1983 Cal. Stat. ch. 842 § 55. The section continued former Probate Code Section 60.1 (repealed by 1983 Cal. Stat. ch. 842 § 18). For background on the provisions of this part, see the Comment to this part under the part heading.

§ 6382. Requirements for international will

Comment. Section 6382 continues Section 6382 of the repealed Probate Code without substantive change. This section is the same in substance as Section 2-1003 of the Uniform Probate Code (1987) (Uniform International Wills Act). As to the construction of provisions drawn from uniform acts, see Section 2.

Background on Section 6382 of Repealed Code

Section 6382 was added by 1983 Cal. Stat. ch. 842 § 55. The section continued former Probate Code Section 60.2 (repealed by 1983 Cal. Stat. ch. 842 § 18). For background on the provisions of this part, see the Comment to this part under the part heading.

§ 6383. Additional provisions concerning form of will

Comment. Section 6383 continues Section 6383 of the repealed Probate Code without substantive change. This section is the same in substance as Section 2-1004 of the Uniform Probate Code (1987) (Uniform International Wills Act). As to the construction of provisions drawn from uniform acts, see Section 2.

Background on Section 6383 of Repealed Code

Section 6383 was added by 1983 Cal. Stat. ch. 842 § 55. The section continued former Probate Code Section 60.3 (repealed by 1983 Cal. Stat. ch. 842 § 18). For background on the provisions of this part, see the Comment to this part under the part heading.

§ 6384. Certificate of authorized person

Comment. Section 6384 continues Section 6384 of the repealed Probate Code without substantive change. This section is the same in substance as Section 2-1005 of the Uniform Probate Code (1987) (Uniform International Wills Act). As to the construction of provisions drawn from uniform acts, see Section 2.

Background on Section 6384 of Repealed Code

Section 6384 was added by 1983 Cal. Stat. ch. 842 § 55. The section continued former Probate Code Section 60.4 (repealed by 1983 Cal. Stat. ch. 842 § 18). For background on the provisions of this part, see the Comment to this part under the part heading.

§ 6385. Effect of certificate

Comment. Section 6385 continues Section 6385 of the repealed Probate Code without change. This section is the same in substance as Section 2-1006 of the Uniform Probate Code (1987) (Uniform International Wills Act). As to the construction of provisions drawn from uniform acts, see Section 2.

Background on Section 6385 of Repealed Code

Section 6385 was added by 1983 Cal. Stat. ch. 842 § 55. The section continued former Probate Code Section 60.5 (repealed by 1983 Cal. Stat. ch. 842 § 18). For

background on the provisions of this part, see the Comment to this part under the part heading.

§ 6386. Revocation

Comment. Section 6386 continues Section 6386 of the repealed Probate Code without change. This section is the same in substance as Section 2-1007 of the Uniform Probate Code (1987) (Uniform International Wills Act). As to the construction of provisions drawn from uniform acts, see Section 2.

Background on Section 6386 of Repealed Code

Section 6386 was added by 1983 Cal. Stat. ch. 842 § 55. The section continued former Probate Code Section 60.6 (repealed by 1983 Cal. Stat. ch. 842 § 18). For background on the provisions of this part, see the Comment to this part under the part heading.

§ 6387. Source and construction of this chapter

Comment. Section 6387 continues Section 6387 of the repealed Probate Code without change. This section is the same in substance as Section 2-1008 of the Uniform Probate Code (1987) (Uniform International Wills Act). As to the construction of provisions drawn from uniform acts, see Section 2.

Background on Section 6387 of Repealed Code

Section 6387 was added by 1983 Cal. Stat. ch. 842 § 55. The section continued former Probate Code Section 60.7 (repealed by 1983 Cal. Stat. ch. 842 § 18). For background on the provisions of this part, see the Comment to this part under the part heading.

§ 6388. "Authorized person" includes California lawyer

Comment. Section 6388 continues Section 6388 of the repealed Probate Code without change. This section is the same in substance as Section 2-1009 of the Uniform Probate Code (1987) (Uniform International Wills Act). As to the construction of provisions drawn from uniform acts, see Section 2.

Background on Section 6388 of Repealed Code

Section 6388 was added by 1983 Cal. Stat. ch. 842 § 55. The section continued the first paragraph of former Probate Code Section 60.8 (repealed by 1983 Cal. Stat. ch. 842 § 18). For background on the provisions of this part, see the Comment to this part under the part heading.

§ 6389. Registry system

Comment. Section 6389 continues Section 6389 of the repealed Probate Code without change. This section is the same in substance as Section 2-1010 of the Uniform Probate Code (1987) (Uniform International Wills Act). As to the construction of provisions drawn from uniform acts, see Section 2.

Background on Section 6389 of Repealed Code

Section 6389 was added by 1983 Cal. Stat. ch. 842 § 55. The section continued paragraph 2 of former Probate Code Section 60.8 (repealed by 1983 Cal. Stat. ch. 842 § 18). For background on the provisions of this part, see the Comment to this part under the part heading.

§ 6390. Chapter as restatement and continuation of former law

Comment. Section 6390 continues Section 6390 of the repealed Probate Code with the omission of the first sentence. The first sentence is unnecessary in light of subdivision (a) of Section 2.

Section 6390 makes clear that after the operative date of this chapter (January 1, 1985) a reference in a written instrument to the former law shall be deemed to be a reference to the corresponding provision of this chapter.

Background on Section 6390 of Repealed Code

Section 6390 was a new provision added by 1984 Cal. Stat. ch. 892 § 39.7. See *Communication of Law Revision Commission Concerning Assembly Bill 2290*, 18 Cal. L. Revision Comm'n Reports 77, 89 (1986). See also *Recommendation Relating to Revision of Wills and Intestate Succession Law*, 17 Cal. L. Revision Comm'n Reports 537 (1984).

PART 2. INTESTATE SUCCESSION

Comment. This part supersedes Part 2 (commencing with Section 6400) of Division 6 the repealed Probate Code. The superseded part was enacted upon recommendation of the California Law Revision Commission. See *Tentative Recommendation Relating to Wills and Intestate Succession,* 16 Cal. L. Revision Comm'n Reports 2301 (1982). See also *Report of Senate Committee on Judiciary on Assembly Bills 25 and 68,* 17 Cal. L. Revision Comm'n Reports 867, 871-83 (1984).

§ 6400. Property subject to intestacy provisions

Comment. Section 6400 continues Section 6400 of the repealed Probate Code without change. This section is the same in substance as Section 2-101 of the Uniform Probate Code (1987). As to the construction of provisions drawn from uniform acts, see Section 2. The section does not apply if the decedent died before January 1, 1985. See Section 6414(a). As to the application of any amendments made after that date, see Section 3. If the decedent died before January 1, 1985, see Section 6414(b), (c). See also Section 6404 (escheat).

Background on Section 6400 of Repealed Code

Section 6400 was added by 1983 Cal. Stat. ch. 842 § 55. The section superseded former Probate Code Section 200 (repealed by 1983 Cal. Stat. ch. 842 § 19) and the first portion of former Probate Code Section 220 (repealed by 1983 Cal. Stat. ch. 842 § 19). For background on the provisions of this part, see the Comment to this part under the part heading.

§ 6401. Intestate share of surviving spouse

Comment. Section 6401 continues Section 6401 of the repealed Probate Code without substantive change. As to a surviving spouse's waiver of rights at death, see Sections 140-147.

Upon the death of a married person, one-half of the community property, belongs to the surviving spouse (Section 100); in the case of intestate succession, the other one-half of the community property, which belongs to the decedent (Section 100), goes to the surviving spouse under subdivision (a) of Section 6401. See also Section 28 (defining "community property").

Upon the death of a married person, one-half of the decedent's quasi-community property belongs to the surviving spouse (Section 101); in the case of intestate succession, the other one-half of the decedent's quasi-community property, which belongs to the decedent (Section 101), goes to the surviving spouse under subdivision (b) of Section 6401. The quasi-community property recaptured under Section 102 does not belong to the decedent even though the property is restored to the decedent's estate; rather it is property that belongs to the surviving spouse. See

Section 102 and the Comment thereto. Accordingly, the surviving spouse does not take the recaptured property by intestate succession. See also Section 66 (defining "quasi-community property").

Community property and quasi-community property that passes to the surviving spouse under subdivisions (a) and (b) is subject to Section 13502 (election to have community and quasi-community property administered) and Sections 13540-13542 (right of surviving spouse to deal with and dispose of community and quasi-community real property). As to the liability of the surviving spouse for debts of the deceased spouse, see Sections 13550-13554.

This section does not apply if the decedent died before January 1, 1985. See Section 6414(a). As to amendments made after that date, see Section 3. If the decedent died before January 1, 1985, see Section 6414(b), (c).

For background on this section, see *Recommendation and Study Relating to Rights of Surviving Spouse in Property Acquired by Decedent While Domiciled Elsewhere,* 1 Cal. L. Revision Comm'n Reports E-1 (1957); *Recommendation and Study Relating to Inter Vivos Marital Property Rights in Property Acquired While Domiciled Elsewhere,* 3 Cal. L. Revision Comm'n Reports I-1 (1961); *Recommendation Relating to Quasi-Community Property,* 9 Cal. L. Revision Comm'n Reports 113 (1969).

Background on Section 6401 of Repealed Code

Section 6401 was added by 1983 Cal. Stat. ch. 842 § 55 and was amended by 1984 Cal. Stat. ch. 892 § 40. Subdivision (a) of Section 6401 was the same in substance as a portion of former Probate Code Section 201 (repealed by 1983 Cal. Stat. ch. 842 § 19). Subdivision (b) was the same in substance as a portion of former Probate Code Section 201.5 (repealed by 1983 Cal. Stat. ch. 842 § 19). Subdivision (c) continued the rules under former law that determined the share the surviving spouse received of the decedent's separate estate. See former Prob. Code §§ 221, 223, 224 (repealed by 1983 Cal. Stat. ch. 842 § 19). The 1984 amendment made a nonsubstantive technical change. See *Recommendation Relating to Revision of Wills and Intestate Succession Law,* 17 Cal. L. Revision Comm'n Reports 537 (1984). For background on the provisions of this part, see the Comment to this part under the part heading.

§ 6402. Intestate share of heirs other than surviving spouse

Comment. Section 6402 continues Section 6402 of the repealed Probate Code without substantive change. Except to the extent indicated below, subdivisions (a)-(d) are the same in substance as Section 2-103 of the Uniform Probate Code (1987). As to the construction of provisions drawn from uniform acts, see Section 2.

Under subdivision (d), grandchildren or more remote lineal descendants of the grandparents of the deceased take ahead of great-grandparents. Subdivision (d) does not adopt the scheme of paragraph

(4) of Section 2-103 of the Uniform Probate Code (1987). (Under that provision of the Uniform Probate Code, half of the estate goes to paternal grandparents or to the issue of the paternal grandparents if both are deceased, and the other half goes to maternal grandparents or to the issue of the maternal grandparents if both are deceased.)

If there are no takers under Sections 6401-6402.5, the decedent's estate escheats to the state. See Section 6404.

This section does not apply if the decedent died before January 1, 1985. See Section 6414(a). As to the application of any amendments made after that date, see Section 3. If the decedent died before January 1, 1985, see Section 6414(b), (c).

Background on Section 6402 of Repealed Code

Section 6402 was added by 1983 Cal. Stat. ch. 842 § 55 and was amended by 1984 Cal. Stat. ch. 892 § 41 and 1985 Cal. Stat. ch. 982 § 19. Subdivision (a) was consistent with former Probate Code Section 222 (repealed by 1983 Cal. Stat. ch. 842 § 19) except that the rule of representation was changed. See Section 240 and the Comment thereto. Subdivisions (b) and (c) were consistent with former Probate Code Section 225 (repealed by 1983 Cal. Stat. ch. 842 § 19) except for the new rule of representation.

Subdivisions (d), (e), (f), and (g) superseded former Probate Code Section 226 (repealed by 1983 Cal. Stat. ch. 842 § 19) and a portion of former Probate Code Section 229 (repealed by 1983 Cal. Stat. ch. 842 § 19). Subdivision (d) was consistent with former Probate Code Section 226 (repealed by 1983 Cal. Stat. ch. 842 § 19) pursuant to which the estate went to the next of kin, except that under subdivision (d) grandchildren or more remote lineal descendants of the grandparents of the deceased took ahead of great-grandparents. By way of contrast, under former Section 226 great-grandparents (related in the third degree) took ahead of grandchildren of the deceased's grandparents (fourth degree). Subdivision (e) was drawn from former Probate Code Section 229 (repealed by 1983 Cal. Stat. ch. 842 § 19) and gave the decedent's stepchildren and issue of deceased stepchildren a right to inherit if there is no one to inherit under subdivisions (a) through (d). Subdivision (f) was drawn from former Probate Code Section 226 (repealed by 1983 Cal. Stat. ch. 842 § 19). Subdivision (g) was drawn from former Section 229 and gave parents and issue of deceased parents of a predeceased spouse of the decedent a right to inherit if there is no one to inherit under subdivisions (a) through (f). See also Section 6402.5 (succession to the portion of the decedent's estate attributable to the decedent's predeceased spouse). The 1984 amendment made a nonsubstantive technical change. See *Communication of Law Revision Commission Concerning Assembly Bill 2290*, 18 Cal. L. Revision Comm'n Reports 77, 89 (1986). See also *Recommendation Relating to Revision of Wills and Intestate Succession Law*, 17 Cal. L. Revision Comm'n Reports 537 (1984). The 1985 amendment substituted the references to Section 240 for the former references to taking "by representation." This change was nonsubstantive. See *Communication Concerning Assembly Bill 196*, 18 Cal. L. Revision Comm'n Reports 367, 375 (1986). See also *Recommendation Relating to Distribution Under a Will or Trust*, 18 Cal. L. Revision Comm'n Reports 269, 284-85 (1986). For background on the provisions of this part, see the Comment to this part under the part heading.

§ 6402.5. Portion of decedent's estate attributable to decedent's predeceased spouse

Comment. Section 6402.5 continues Section 6402.5 of the repealed Probate Code without change. This section does not apply if the decedent died before January 1, 1985. See Section 6414(a). As to the application of any amendments made after that date, see Section 3. If the decedent died before January 1, 1985, see Section 6414(b), (c).

Background on Section 6402.5 of Repealed Code

Section 6402.5 was added by 1983 Cal. Stat. ch. 842 § 55 and was amended by 1985 Cal. Stat. ch. 982 § 20 and 1986 Cal. Stat. ch. 873 § 1. As enacted in 1983, the section continued the substance of subdivisions (a), (b), and (e) of former Probate Code Section 229 (repealed by 1983 Cal. Stat. ch. 842 § 19) with the following changes:

(1) The application of Section 6402.5 was limited to real property and the section applied only where the predeceased spouse died not more than 15 years before the decedent. Former Section 229 was not so limited. The rules for determining what constitutes "the portion of the decedent's estate attributable to the decedent's predeceased spouse" were the same as under subdivision (b) of former Section 229.

(2) The provisions of Section 6402.5 relating to taking by representation were consistent with the general provisions relating to taking by representation. See Section 240.

(3) Paragraph (4) of subdivision (b) of former Section 229 was not continued. The omitted provision was made obsolete by 1980 Cal. Stat. ch. 119, which provided that property set aside as a probate homestead for a surviving spouse shall in no case be set aside beyond the lifetime of the surviving spouse; after the 1980 enactment, the probate homestead is not a part of the estate of that spouse when that spouse dies.

(4) Subdivision (c), now subdivision (g), was included in Section 6402.5 to make clear that quasi-community real property (see Section 66) is to be treated the same as community real property for the purposes of this section. Former Section 229 contained no provision that dealt specifically with quasi-community property.

(5) The special rule provided in subdivision (c) of former Section 229 was not continued. Insofar as the property described in that subdivision is a "portion of the decedent's estate attributable to the decedent's predeceased spouse" and the spouse died not more than 15 years before the decedent, the property is governed by the general provisions of Section 6402.5.

(6) Subdivision (d) of former Section 229 was superseded by subdivisions (e) and (g) of Section 6402.

The 1985 amendment substituted the references to Section 240 for the former reference to taking "by representation." This change was nonsubstantive. See *Recommendation Relating to Distribution Under a Will or Trust*, 18 Cal. L. Revision Comm'n Reports 269, 285-87 (1986). The 1986 amendment made the section applicable to personal property. For background on the provisions of this part, see the Comment to this part under the part heading.

§ 6403. Requirement that heir survive decedent

Comment. Section 6403 continues Section 6403 of the repealed Probate Code without substantive change. The section is the same in substance as Section 2-104 of the Uniform Probate Code (1987) insofar as that section relates to taking by intestate succession. As to the construction of provisions drawn from uniform acts, see Section 2.

Where Section 6403 applies, the 120-hour survival requirement is used to determine whether one person survived another for the purposes of Sections 103 (simultaneous death of husband and wife) and 234 (proceedings to determine survival).

For a provision governing disposition of community property and quasi-community property where a married person does not survive his or her spouse, see Section 103. See also Sections 230-234 (proceeding to determine whether one person survived another).

Section 6403 does not apply if the decedent died before January 1, 1985. See Section 6414(a). As to the application of any amendments made after that date, see Section 3. If the decedent died before January 1, 1985, see Section 6414(b), (c).

Background on Section 6403 of Repealed Code

Section 6403 was a new provision added by 1983 Cal. Stat. ch. 842 § 55 and amended by 1989 Cal. Stat. ch. 544 § 5 to provide a 120-hour survival rule. See *Recommendation Relating to 120-Hour Survival Requirement,* 20 Cal. L. Revision Commission Reports 21 (1990); see also *Communication from the California Law Revision Commission Concerning Assembly Bill 158,* 20 Cal. L. Revision Commission Reports 235, 236 (1990). For background on the provisions of this part, see the Comment to this part under the part heading.

§ 6404. Escheat if no taker

Comment. Section 6404 continues Section 6404 of the repealed Probate Code without change. This section is comparable to Section 2-105 of the Uniform Probate Code (1987). As to the construction of provisions drawn from uniform acts, see Section 2. For provisions relating to escheat, see Sections 6800-6806. See also Code Civ. Proc. §§ 1300-1615 (unclaimed property). Section 6404 does not apply if the decedent died before January 1, 1985. See Section 6414(a). As to the application of any amendments made after that date, see Section 3. If the decedent died before January 1, 1985, see Section 6414(b), (c).

Background on Section 6404 of Repealed Code

Section 6404 was a new provision added by 1983 Cal. Stat. ch. 842 § 55. For background on the provisions of this part, see the Comment to this part under the part heading.

§ 6406. Relatives of halfblood

Comment. Section 6406 continues Section 6406 of the repealed Probate Code without change. This section is the same as Section 2-107 of the Uniform Probate Code (1987). As to the construction of provisions drawn from uniform acts, see Section 2. See also Section 6152 (construction of wills). Section 6406 does not apply if the decedent died before January 1, 1985. See Section 6414(a). As to the application of any amendments made after that date, see Section 3. If the decedent died before January 1, 1985, see Section 6414(b), (c).

Background on Section 6406 of Repealed Code

Section 6406 was added by 1983 Cal. Stat. ch. 842 § 55. The section superseded former Probate Code Section 254 (repealed by 1983 Cal. Stat. ch. 842 § 19). Under former Section 254, halfblood relatives of the decedent who were not of the blood of an ancestor of the decedent were excluded from inheriting property of the decedent which had come to the decedent from such ancestor. Section 6406 eliminated this rule and puts halfbloods on the same footing as wholeblood relatives of the decedent. For background on the provisions of this part, see the Comment to this part under the part heading.

§ 6407. Unborn relatives of decedent

Comment. Section 6407 continues Section 6407 of the repealed Probate Code without change. This section is the same in substance as Section 2-108 of the Uniform Probate Code (1987). As to the construction of provisions drawn from uniform acts, see Section 2. Section 6407 is consistent with Civil Code Section 29. See also Section 6150(c) (person conceived before but born after a testator's death or after time the devise is to take effect in enjoyment takes if answering the class description). Section 6407 does not apply if the decedent died before January 1, 1985. See Section 6414(a). As to the application of any amendments made after that date, see Section 3. If the decedent died before January 1, 1985, see Section 6414(b), (c).

Background on Section 6407 of Repealed Code

Section 6407 was added by 1983 Cal. Stat. ch. 842 § 55. The section superseded the second sentence of former Probate Code Section 250 (repealed by 1983 Cal. Stat. ch. 842 § 19). For background on the provisions of this part, see the Comment to this part under the part heading.

§ 6408. Parent and child relationship

Comment. Section 6408 continues Sections 6408 and 6408.5 of the repealed Probate Code without substantive change. Subdivisions (a), (b), (c), and (d) of former Section 6408 are now designated as subdivisions (a), (e), (f), and (g), respectively. Subdivisions (a), (b), and (c) of former Section 6408.5 are now found in subdivisions (b), (c), and (d), respectively, of Section 6408.

Section 6408 is drawn in part from Section 2-109 of the Uniform Probate Code (1987). As to the construction of provisions drawn from uniform acts, see Section 2.

In case of an adoption coming within subdivision (b), the adopted child may inherit from or through the adoptive parent and also from or through the natural parent who gave up the child for adoption or through the natural parent who died preceding the adoption. The following examples indicate in various situations whether an adopted child or the issue of an adopted child may inherit from or through the child's natural parent.

Example 1. Child never lived with either mother or father; both parents relinquish child for adoption. The adopted child's relationship with both natural parents' families is severed. The requirements of subdivision (b) are not satisfied.

Example 2. Child's mother and father were married or lived together as a family. Child lives with mother and father. Father dies. Mother relinquishes child for adoption. The adopted child remains a member of both the deceased father's family and of the relinquishing mother's family. The requirement of subdivision (b) is satisfied because the adoption was "after the death of either of the natural parents."

Example 3. Child's mother and father were married or lived together as a family until father died. Child lives with mother but not father because father died prior to child's birth. Mother relinquishes child for adoption. The adopted child remains a member of both the deceased father's family and of the relinquishing mother's family. Child remains a member of the deceased father's family because the father died before the birth of the child (satisfying the subdivision (b)(1) requirement) and the adoption was after the death of the father (satisfying the subdivision (b)(2) requirement).

Example 4. Child lives with father's family but not with mother or father because mother died shortly after child's birth and father relinquished child for adoption. Child is not a member of either the deceased mother's family or the relinquishing father's family. This is the result even if the father is the legitimate or acknowledged father of the child and has supported the child, since the relationship fails to meet the requirement of subdivision (b)(1) that the natural parent (the father) and the adopted person have "lived together." The child does not remain a member of the deceased mother's family because the mother and child never lived together as a parent and child, the mother having died shortly after the birth of the child.

In case of an adoption described in subdivision (c), the natural relatives cannot inherit from the adopted child, even though under subdivision (a)(1) the child could inherit from the natural relatives.

Subdivision (d) requires both acknowledgement and contribution to the support or care of a child born out of wedlock before a parent or a relative of a parent may inherit from or through the child, except that the issue of the child or a brother or sister of the child or the issue of such brother or sister may inherit from or through the child even though these requirements are not satisfied. For the purposes of subdivision (d), it is sufficient if a relative of the parent acknowledges the child and contributes to the support or care of the child. If the child born out of

wedlock is adopted, inheritance from or though the child may be precluded under subdivision (b) or (c), even where the requirements of subdivision (d) are satisfied.

Subdivision (e) applies, for example, where a foster child or stepchild is not adopted because a parent of the child refuses to consent to the adoption. See also Estate of Lind, 209 Cal. App. 3d 1424, 257 Cal. Rptr. 853 (1989); Estate of Claffey, 209 Cal. App. 3d 254, 257 Cal. Rptr. 197 (1989). Even though the requirements of subdivision (e) are satisfied, the natural parent may continue to inherit from the child under paragraph (1) of subdivision (a). The foster parent or stepparent may not inherit from the child: Paragraph (2) of subdivision (a) does not apply because the adoption was not completed, and subdivision (e) does not apply because that subdivision applies only to inheritance by the foster child or stepchild or the child's issue "from" or "through" a foster parent or stepparent, not to inheritance "by" a foster parent or stepparent. The child, however, may inherit both from the natural parent under paragraph (1) of subdivision (a), and from the foster parent or stepparent under subdivision (e).

Subdivision (g) makes clear that Section 6408 has no effect on the judicial doctrine of equitable adoption for the benefit of the child or his or her descendants. See, e.g., Estate of Wilson, 111 Cal. App. 3d 242, 168 Cal. Rptr. 533 (1980).

The definitions of "child" (Section 26), "issue" (Section 50), and "parent" (Section 54) adopt the rules set out in Section 6408. See also Section 6152 (construction of wills).

Section 6408 does not apply if the decedent died before January 1, 1985. See Section 6414(a). If the decedent died before January 1, 1985, see Section 6414(b), (c).

Background on Sections 6408 and 6408.5 of Repealed Code

Section 6408 and 6408.5 were added by 1983 Cal. Stat. ch. 842 § 55. Section 6408 was amended by 1984 Cal. Stat. ch. 892 § 41.5 and 1985 Cal. Stat. ch. 982 § 21. Section 6408.5 was amended by 1984 Cal. Stat. ch. 892 § 42 and 1985 Cal. Stat. ch. 982 § 22. Section 6408 superseded former Probate Code Sections 255 and 257 (repealed by 1983 Cal. Stat. ch. 842 § 19). Section 6408.5 was new. For background on the provisions of this part, see the Comment to this part under the part heading.

The 1984 amendments removed paragraph (3) of subdivision (a) from Section 6408 and added the same paragraph to Section 6408.5 as subdivision (a). Section 6408.5 was also amended to require both acknowledgment and contribution to the support or care of a child born out of wedlock before the parent or a relative of that parent may inherit from or through the child. Formerly either acknowledgement or support was required. See *Communication of Law Revision Commission Concerning Assembly Bill 2290*, 18 Cal. L. Revision Comm'n Reports 77, 89-90 (1986).

The significant revisions made by the 1985 amendments to Section 6408 were:

(1) Former paragraph (3) of subdivision (a) was redesignated as subdivision (b).

(2) Language was revised that previously might have had the possible undesirable effect of cutting off the right of inheritance of a natural parent who refused to consent to adoption of the child by a foster parent or stepparent.

(3) Subdivision (d) was added to make clear that Section 6408 had no effect on the application of the judicial doctrine of equitable adoption for the benefit of the child or the child's descendants.

The 1985 amendment to Section 6408.5 added language to paragraph (1) of subdivision (a) relating to the case where the natural parent dies before the birth of the child. The effect of the amendment was to expand the situations where inheritance was allowed. Subdivision (c) was amended to permit inheritance from or through a child born out of wedlock if a relative of the parent acknowledged the child and contributed to the support or care of the child. In addition, the amendment permitted the issue of the child or a brother or sister of the child or the issue of such brother or sister to inherit from or through the child even though the requirements of paragraphs (1) and (2) of subdivision (c) are not satisfied.

As to the 1985 amendments, see *Recommendation Relating to Effect of Adoption or Out of Wedlock Birth on Rights at Death,* 18 Cal. L. Revision Comm'n Reports 289, 299-303 (1986).

§ 6409. Advancements

Comment. Section 6409 continues Section 6409 of the repealed Probate Code without change. Subdivisions (a), (b), and (d) are the same in substance as Section 2-110 of the Uniform Probate Code (1987). As to the construction of provisions drawn from uniform acts, see Section 2. For a comparable rule concerning ademption by satisfaction, see Section 6174. See also Section 11640 (hearing and order resolving questions arising under Section 6409). Section 6409 does not apply if the decedent died before January 1, 1985. See Section 6414(a). As to the application of any amendments made after that date, see Section 3. If the decedent died before January 1, 1985, see Section 6414(b), (c). As to the effect of a disclaimer, see Section 282.

Background on Section 6409 of Repealed Code

Section 6409 was added by 1983 Cal. Stat. ch. 842 § 55 and was amended by 1984 Cal. Stat. ch. 892 § 43. Subdivisions (a), (b), and (d) superseded the last portion of former Probate Code Section 1050 (repealed by 1983 Cal. Stat. ch. 842 § 44). Subdivisions (b) and (c) superseded a portion of former Probate Code Section 1052 (repealed by 1983 Cal. Stat. ch. 842 § 46).

Section 6409 was consistent with former law with two exceptions:

(1) Under former Probate Code Section 1053 (repealed by 1983 Cal. Stat. ch. 842 § 47), if the donee of an advancement predeceased the donor, the advancement was deducted from the shares the heirs of the donee would receive from the donor's estate, while under Section 6409 the advancement was not charged against the donee's issue unless the declaration or acknowledgment provides otherwise.

(2) The provisions relating to the valuation of the property, which superseded former Probate Code Section 1052 (repealed by 1983 Cal. Stat. ch. 842 § 46), were consistent with the provisions of Section 6174 relating to ademption by satisfaction. See the Comment to Section 6174.

The 1984 amendment revised the section to cover advancements where there is a partial intestacy. See *Communication of Law Revision Commission Concerning Assembly Bill 2290*, 18 Cal. L. Revision Comm'n Reports 77, 90 (1986).

For background on the provisions of this part, see the Comment to this part under the part heading.

§ 6410. Debt owed to decedent

Comment. Section 6410 continues Section 6410 of the repealed Probate Code without change. This section is the same in substance as Section 2-111 of the Uniform Probate Code (1987) and is consistent with prior California case law. See Estate of Berk, 196 Cal. App. 2d 278, 16 Cal. Rptr. 492 (1961). As to the construction of provisions drawn from uniform acts, see Section 2. As to the effect of a disclaimer, see Section 282. This section does not apply if the decedent died before January 1, 1985. See Section 6414(a). As to the application of any amendments made after that date, see Section 3. If the decedent died before January 1, 1985, see Section 6414(b), (c).

Background on Section 6410 of Repealed Code

Section 6410 was a new provision added by 1983 Cal. Stat. ch. 842 § 55. For background on the provisions of this part, see the Comment to this part under the part heading.

§ 6411. Aliens

Comment. Section 6411 continues Section 6411 of the repealed Probate Code without change. This section is the same in substance as Section 2-112 of the Uniform Probate Code (1987) and is consistent with other provisions of California law. See Cal. Const. art. 1, § 20; Civil Code § 671. As to the construction of provisions drawn from uniform acts, see Section 2. This section does not apply if the decedent died before January 1, 1985. See Section 6414(a). As to the application of any amendments made after that date, see Section 3. If the decedent died before January 1, 1985, see Section 6414(b), (c).

Background on Section 6411 of Repealed Code

Section 6411 was a new provision added by 1983 Cal. Stat. ch. 842 § 55. For background on the provisions of this part, see the Comment to this part under the part heading.

§ 6412. Dower and curtesy not recognized

Comment. Section 6412 continues Section 6412 of the repealed Probate Code without change. This section is the same in substance as Section 2-113 of the Uniform Probate Code (1987). As to the construction of provisions drawn from uniform acts, see Section 2. The introductory clause is not found in the Uniform Probate Code and is included to recognize that Section 120 gives the surviving spouse rights in California real property of a nondomiciliary decedent that may be akin

to dower or curtesy in the decedent's state of domicile. This section applies whether the decedent died before, on, or after January 1, 1985. See Section 6414(b). As to the application of any amendments made after that date, see Section 3.

Background on Section 6412 of Repealed Code

Section 6412 was added by 1983 Cal. Stat. ch. 842 § 55 and was amended by 1984 Cal. Stat. ch. 892 § 44. The section continued the substance of former Section 5129 of the Civil Code (repealed by 1983 Cal. Stat. ch. 842 § 9). The 1984 amendment revised Section 6412 to recognize that Section 120 gives the surviving spouse rights in California real property of a nondomiciliary decedent that may be akin to dower or curtesy in the decedent's state of domicile. This amendment was clarifying, and not substantive. See *Recommendation Relating to Revision of Wills and Intestate Succession Law*, 17 Cal. L. Revision Comm'n Reports 537, 582 (1984). For background on the provisions of this part, see the Comment to this part under the part heading.

§ 6413. Person related to decedent through two lines of relationships

Comment. Section 6413 continues Section 6413 of the repealed Probate Code without change. This section is the same in substance as Section 2-114 of the Uniform Probate Code (1987). As to the construction of provisions drawn from uniform acts, see Section 2. The section has potential application, for example, in a case where the natural parents of a child are killed in an accident and the child is adopted by a brother or sister of the natural mother of child, leaving the child as natural and adopted grandchild of the parents of the natural mother. See also Uniform Probate Code § 2-114 comment (1987). Section 6413 does not apply if the decedent died before January 1, 1985. See Section 6414(a). As to the application of any amendments made after that date, see Section 3. If the decedent died before January 1, 1985, see Section 6414(b), (c).

Background on Section 6413 of Repealed Code

Section 6413 was a new provision added by 1983 Cal. Stat. ch. 842 § 55. For background on the provisions of this part, see the Comment to this part under the part heading.

§ 6414. Testator's death before January 1, 1985

Comment. Section 6414 continues Section 6414 of the repealed Probate Code without substantive change. This section limits the application of Sections 6400-6411 and 6413 to cases where the decedent died on or after January 1, 1985, the operative date of those sections. As to the application of any amendments made after that date, see Section 3. Subdivision (c) makes clear that cross-references to a provision of this part contained in Code of Civil Procedure Section 377 (wrongful death) and Penal Code Section 3524 (injury or death of prisoner during biomedical or behavioral research) are deemed to be references to the

corresponding provision of former law in cases where the decedent died before January 1, 1985, the operative date of this part.

Background on Section 6414 of Repealed Code

Section 6414 was a new provision added by 1984 Cal. Stat. ch. 892 § 44.5. See *Communication of Law Revision Commission Concerning Assembly Bill 2290*, 18 Cal. L. Revision Comm'n Reports 77, 90 (1986). See also *Recommendation Relating to Revision of Wills and Intestate Succession Law*, 17 Cal. L. Revision Comm'n Reports 537 (1984). The section was amended by 1989 Cal. Stat. ch. 21 § 12 to delete the reference to Section 300 of the Probate Code, which had been repealed. See *Communication from the California Law Revision Commission Concerning Assembly Bill 156*, 20 Cal. L. Revision Comm'n Reports 227, 229-30 (1990). For background on the provisions of this part, see the Comment to this part under the part heading.

PART 3. FAMILY PROTECTION

Comment. This part supersedes Part 3 (commencing with Section 6500) of Division 6 the repealed Probate Code. The superseded part was enacted upon recommendation of the California Law Revision Commission. See *Tentative Recommendation Relating to Wills and Intestate Succession*, 16 Cal. L. Revision Comm'n Reports 2301 (1982). See also *Report of Senate Committee on Judiciary on Assembly Bills 25 and 68*, 17 Cal. L. Revision Comm'n Reports 867, 871-83 (1984).

CHAPTER 1. TEMPORARY POSSESSION OF FAMILY DWELLING AND EXEMPT PROPERTY

§ 6500. Temporary right to remain in possession

Comment. Section 6500 continues Section 6500 of the repealed Probate Code without change. See also Code Civ. Proc. §§ 695.010-695.070, 703.010-704.995, 706.050-706.051 (property exempt from enforcement of money judgment). Other exemptions are listed in the Comment to Code of Civil Procedure Section 703.010. As to a surviving spouse's waiver of rights at death, see Sections 140-147. For background on this section, see *Recommendation Relating to Probate Homestead*, 15 Cal. L. Revision Comm'n Reports 401, 420 (1980).

Background on Section 6500 of Repealed Code

Section 6500 was added by 1983 Cal. Stat. ch. 842 § 55. The section continued the substance of subdivision (a) of former Probate Code Section 660 (repealed by 1983 Cal. Stat. ch. 842 § 39). For background on the provisions of this part, see the Comment to this part under the part heading.

§ 6501. Petition for order; notice of hearing

Comment. Section 6501 continues Section 6501 of the repealed Probate Code without change. For general provisions, see Sections 1000-1004 (rules of practice), 1020-1023 (petitions and other papers), 1040-1050 (hearings and orders). For general provisions relating to notice of hearing, see Sections 1200-1221. See also Sections 1250-1252

(request for special notice), 1260-1265 (proof of giving notice). The requirement that notice be given as provided in Section 1220 does not apply to a particular notice where the notice was delivered, mailed, posted, or first published before July 1, 1991. In such a case, the applicable law in effect before July 1, 1991, continues to apply to the giving of the notice. Section 1200(c). As to the application of any amendments made after that date, see Section 3. See also Section 48 ("interested person" defined).

Background on Section 6501 of Repealed Code

Section 6501 was a new provision added by 1983 Cal. Stat. ch. 842 § 55 and was amended by 1987 Cal. Stat. ch. 923 § 87. The section was drawn from former Probate Code Section 662 (probate homestead) (repealed by 1983 Cal. Stat. ch. 842 § 39). The 1987 amendment (1) revised the cross-reference to the procedure for mailing notice of the hearing and (2) deleted the provision requiring the clerk to set the petition for hearing, this provision being unnecessary in view of Section 1285 which is a general provision that imposes this duty on the clerk. As to the 1987 amendment, see *Communication from California Law Revision Commission Concerning Assembly Bill 708*, 19 Cal. L. Revision Comm'n Reports 545, 560 (1988); *Comments to Conforming Revisions and Repeals*, 19 Cal. L. Revision Comm'n Reports 391, 449 (1988). For background on the provisions of this part, see the Comment to this part under the part heading.

CHAPTER 2. SETTING ASIDE EXEMPT PROPERTY OTHER THAN FAMILY DWELLING

§ 6510. Setting aside exempt property

Comment. Section 6510 continues Section 6510 of the repealed Probate Code without change. This section permits, for example, the minor children to receive the furniture and household furnishings for a probate homestead set apart for the use of the minor children. See the Comment to Section 6521. See also the Comment to Section 6500 for a listing of provisions relating to property exempt from enforcement of a money judgment. As to a surviving spouse's waiver of rights at death, see Sections 140-147.

Background on Section 6510 of Repealed Code

Section 6510 was added by 1983 Cal. Stat. ch. 842 § 55. The section continued the substance of a portion of subdivision (b) of former Probate Code Section 660 (repealed by 1983 Cal. Stat. ch. 842 § 39), except that Section 6510 permitted the court to award the exempt property to the decedent's minor children even where there is a surviving spouse, while the former section permitted an award to the minor children only in case of the death of the surviving spouse. This change in the former law adopted the rule as to a probate homestead under former Probate Code Section 661 (repealed by 1983 Cal. Stat. ch. 842 § 39), the substance of which is continued in Section 6521, and applied it to property exempt from a money judgment other than the family dwelling. For background on the provisions of this part, see the Comment to this part under the part heading.

§ 6511. Petition for order; notice of hearing

Comment. Section 6511 continues Section 6511 of the repealed Probate Code without change. For general provisions, see Sections 1000-1004 (rules of practice), 1020-1023 (petitions and other papers), 1040-1050 (hearings and orders). For general provisions relating to notice of hearing, see Sections 1200-1221. See also Sections 1250-1252 (request for special notice), 1260-1265 (proof of giving notice). The requirement that notice be given as provided in Section 1220 does not apply to a particular notice where the notice was delivered, mailed, posted, or first published before July 1, 1991. In such a case, the applicable law in effect before July 1, 1991, continues to apply to the giving of the notice. Section 1200(c). As to the application of any amendments made after that date, see Section 3. See also Section 48 ("interested person" defined). As to the right to appeal from an order under this section, see Section 7240 and the Comment thereto.

Background on Section 6511 of Repealed Code

Section 6511 was a new provision added by 1983 Cal. Stat. ch. 842 § 55 and was amended by 1987 Cal. Stat. ch. 923 § 88. The section was drawn from former Probate Code Section 662 (probate homestead) (repealed by 1983 Cal. Stat. ch. 842 § 39). The 1987 amendment (1) revised the cross-reference to the procedure for mailing notice of the hearing and (2) deleted the provision requiring the clerk to set the petition for hearing, this provision being unnecessary in view of Section 1285 (now Section 1041), a general provision that imposes this duty on the clerk. As to the 1987 amendment, see *Communication from California Law Revision Commission Concerning Assembly Bill 708*, 19 Cal. L. Revision Comm'n Reports 545, 560 (1988); *Comments to Conforming Revisions and Repeals*, 19 Cal. L. Revision Comm'n Reports 391, 449 (1988).

CHAPTER 3. SETTING ASIDE PROBATE HOMESTEAD

Comment. This chapter supersedes Chapter 3 (commencing with Section 6520) of Part 3 of Division 6 of the repealed Probate Code. The superseded chapter was enacted upon recommendation of the California Law Revision Commission. See *Recommendation Relating to Probate Homestead*, 15 Cal. L. Revision Comm'n Reports 401 (1980). See also *Recommendation and Study Relating to Rights of Surviving Spouse in Property Acquired by Decedent While Domiciled Elsewhere*, 1 Cal. L. Revision Comm'n Reports E-1 (1957); *Recommendation and Study Relating to Inter Vivos Marital Property Rights in Property Acquired While Domiciled Elsewhere*, 3 Cal. L. Revision Comm'n Reports I-1 (1961).

§ 6520. Court may select and set aside probate homestead

Comment. Section 6520 continues Section 6520 of the repealed Probate Code without change. Under this section, establishment of a probate homestead is discretionary with the court. The factors to be used by the court in exercising discretion are set forth in Section 6523.

Background on Section 6520 of Repealed Code

Section 6520 was added by 1983 Cal. Stat. ch. 842 § 55. The section continued the substance of a portion of subdivision (b) of former Probate Code Section 660 (repealed by 1983 Cal. Stat. ch. 842 § 39). For background on the provisions of this chapter, see the Comment to this chapter under the chapter heading.

§ 6521. Persons for whose use homestead to be set apart

Comment. Section 6521 continues Section 6521 of the repealed Probate Code without change. This section permits the probate homestead to be set apart for minor children of the decedent even if there is a surviving spouse. This may be desirable, for example, if the minor children live apart from the surviving spouse or where the minor children are not children of the surviving spouse. As to a surviving spouse's waiver of rights at death, see Sections 140-147.

Background on Section 6521 of Repealed Code

Section 6521 was added by 1983 Cal. Stat. ch. 842 § 55. The section continued subdivision (a) of former Probate Code Section 661 (repealed by 1983 Cal. Stat. ch. 842 § 39). For background on the provisions of this chapter, see the Comment to this chapter under the chapter heading.

§ 6522. Property out of which homestead selected

Comment. Section 6522 continues Section 6522 of the repealed Probate Code without change. This section does not require that the probate homestead be selected out of real property. The probate homestead may be selected out of personal property such as a mobilehome. Under Section 6522, the court may select a homestead out of separate property of the decedent despite the availability of community or quasi-community property or property held in common by the decedent and the person in whose use the homestead is set apart. However, the court must give preference to property other than the separate property of the decedent for selection as a probate homestead.

Subdivision (b) limits the property from which the homestead may be selected. A probate homestead may not be created on property of which a third person has the right to possession, whether by partial ownership, lease, or otherwise, without the person's consent. The probate homestead can affect the possessory rights only of testate and intestate successors of the decedent. See also Sections 28 ("community property" defined), 66 ("quasi-community property" defined). As to a surviving spouse's waiver of rights at death, see Sections 140-147.

Background on Section 6522 of Repealed Code

Section 6522 was added by 1983 Cal. Stat. ch. 842 § 55. The section continued subdivisions (b) and (c) of former Probate Code Section 661 (repealed by 1983 Cal. Stat. ch. 842 § 39). For background on the provisions of this chapter, see the Comment to this chapter under the chapter heading.

§ 6523. Factors to be considered in setting apart homestead

Comment. Section 6523 continues Section 6523 of the repealed Probate Code without change. Under this section, the court has broad discretion in selecting the probate homestead and may take into account a wide variety of factors in exercising its discretion. This section expressly authorizes the court to condition the homestead on any terms that appear proper to the court. The court may select the homestead out of the separate property of the decedent but must give a preference to community or quasi-community property of or other property held in common by the decedent and the person for whose use the homestead is set apart. See Section 6522 and the Comment thereto. The court must select the most appropriate property as the homestead and is not limited to the existing dwelling. The court is not limited to existing lots or parcels, but must set apart only so much of the property as is reasonable under the circumstances of the case. As to a surviving spouse's waiver of rights at death, see Sections 140-147.

Background on Section 6523 of Repealed Code

Section 6523 was added by 1983 Cal. Stat. ch. 842 § 55. The section continued former Probate Code Section 664 (repealed by 1983 Cal. Stat. ch. 842 § 39). For background on the provisions of this chapter, see the Comment to this chapter under the chapter heading.

§ 6524. Duration of homestead; rights of parties

Comment. Section 6524 continues Section 6524 of the repealed Probate Code without change. This section requires that the probate homestead be set apart only for a limited period, regardless whether the homestead is selected out of the separate property of the decedent or otherwise. Under this section, the property set aside as a probate homestead remains subject to administration. The testate or intestate successors of the decedent or other successors to the property set aside as a probate homestead take the property subject to the probate homestead right. Any portion of the probate homestead that is the property of the person for whom the homestead was set apart remains vested in the person at the termination of the probate homestead right. The rights of the homestead recipients and remaindermen are governed by the Legal Estates Principal and Income Law, but the court setting apart the homestead may vary the requirements of that law where appropriate to do so. See Civil Code § 731.04. As to the rights of creditors during and after administration, see Section 6526.

Background on Section 6524 of Repealed Code

Section 6524 was added by 1983 Cal. Stat. ch. 842 § 55. The section continued subdivision (d) of former Probate Code Section 661 (repealed by 1983 Cal. Stat. ch. 842 § 39). For background on the provisions of this chapter, see the Comment to this chapter under the chapter heading.

§ 6525. Petition; notice of hearing

Comment. Section 6525 restates Section 6525 of the repealed Probate Code with the addition of the requirement that notice of the hearing be given to each known heir or devisee whose interest in the estate would be affected by the petition. See Section 1206 (notice to known heirs or known devisees). For general provisions, see Sections 1000-1004 (rules of practice), 1020-1023 (petitions and other papers), 1040-1050 (hearings and orders). For general provisions relating to notice of hearing, see Sections 1200-1221. See also Sections 1250-1252 (request for special notice), 1260-1265 (proof of giving notice). The requirement that notice be given as provided in Section 1220 does not apply to a particular notice where the notice was delivered, mailed, posted, or first published before July 1, 1991. In such a case, the applicable law in effect before July 1, 1991, continues to apply to the giving of the notice. Section 1200(c). As to the application of any amendments made after that date, see Section 3. See also Section 48 ("interested person" defined). As to the right to appeal from an order under this chapter, see Section 7240 and the Comment thereto.

Background on Section 6525 of Repealed Code

Section 6525 was added by 1983 Cal. Stat. ch. 842 § 55 and was amended by 1987 Cal. Stat. ch. 923 § 89. The section continued the substance of former Probate Code Section 662 (repealed by 1983 Cal. Stat. ch. 842 § 39). The 1987 amendment (1) revised the cross-reference to the procedure for mailing notice of the hearing and (2) deleted the provision requiring the clerk to set the petition for hearing, this provision being unnecessary in view of Section 1285 which is a general provision that imposes this duty on the clerk. As to the 1987 amendment, see *Communication from California Law Revision Commission Concerning Assembly Bill 708*, 19 Cal. L. Revision Comm'n Reports 545, 560 (1988); *Comments to Conforming Revisions and Repeals*, 19 Cal. L. Revision Comm'n Reports 391, 449 (1988). For background on the provisions of this chapter, see the Comment to this chapter under the chapter heading.

§ 6526. Liability of property set apart as homestead for claims against estate

Comment. Section 6526 continues Section 6526 of the repealed Probate Code without change. Subdivision (a) sets the rules governing liability of probate homestead property for debts of the decedent. The first sentence makes clear that such property may be used to satisfy debts of the decedent, but any sale is subject to the probate homestead right of occupancy by the person for whose use the homestead is set apart. This codifies the rule of In re Estate of Tittel, 139 Cal. 149, 72 P. 909 (1903). The second sentence recognizes the common law rule that the probate homestead does not affect prior liens and encumbrances. See, e.g., In re Estate of McCauley, 50 Cal. 544 (1875); In re Estate of Huelsman, 127 Cal. 275, 59 P. 776 (1899). However, the court may select as a probate

homestead property not subject to liens and encumbrances or property whose liens and encumbrances will be discharged in probate. See Section 6523 (discretion of court). Preexisting liens and encumbrances on the property may be satisfied out of the probate homestead right. If the property would have been exempt from enforcement of a claim secured by a lien or encumbrance at the time of the decedent's death, however, the homestead recipient may claim a homestead exemption for the probate homestead right.

Subdivision (b) states the rule governing liability of the probate homestead right for debts of the person for whose use the homestead is set apart. Subdivision (b) creates an absolute exemption for the probate homestead right, both as to prior and subsequently incurred debts, regardless of liens created on the probate homestead right. Subdivision (b) does not preclude a creditor of the person for whose use the probate homestead is set apart from reaching any interest in the property the person may have apart from the probate homestead right; this may occur where the homestead was selected out of community property of or property held in common by the decedent and the person for whose use the homestead is set apart. In such a situation, the exemption from execution for a dwelling may be available to the person for whose use the homestead is set apart to protect his or her property interest.

Subdivision (c) states the rule governing liability of probate homestead property for debts of the heirs or devisees or other persons who may have acquired the property through administration. The probate homestead property is subject to administration and devolves as any other property, subject to the right of use of the homestead by the persons for whose use it is set apart. See Section 6524. Under subdivision (c) of Section 6526, the remainder interest but not the probate homestead right is subject to claims of creditors.

Background on Section 6526 of Repealed Code

Section 6526 was added by 1983 Cal. Stat. ch. 842 § 55. The section continued former Probate Code Section 663 (repealed by 1983 Cal. Stat. ch. 842 § 39). For background on the provisions of this chapter, see the Comment to this chapter under the chapter heading.

§ 6527. Modification or termination of homestead right

Comment. Section 6527 continues Section 6527 of the repealed Probate Code without change. This section gives the court authority to modify the probate homestead right until the entry of an order for final distribution in recognition of the possibility of changed circumstances. For general provisions, see Sections 1000-1004 (rules of practice), 1020-1023 (petitions and other papers), 1040-1050 (hearings and orders). For general provisions relating to notice of hearing, see Sections 1200-1221.

See also Sections 1250-1252 (request for special notice), 1260-1265 (proof of giving notice). See also Section 48 ("interested person" defined).

Background on Section 6527 of Repealed Code

Section 6527 was added by 1983 Cal. Stat. ch. 842 § 55 and was amended by 1987 Cal. Stat. ch. 923 § 90 and 1988 Cal. Stat. ch. 1199 § 77.5. The section continued the substance of former Probate Code Section 665 (repealed by 1983 Cal. Stat. ch. 842 § 39) with the addition of subdivision (c). The 1987 amendment (1) revised the cross-reference to the procedure for mailing notice of the hearing and (2) deleted the provision formerly in subdivision (c) excusing giving notice to oneself, this provision now being generalized in Section 1201. As to the 1987 amendment, see *Communication from California Law Revision Commission Concerning Assembly Bill 708*, 19 Cal. L. Revision Comm'n Reports 545, 561 (1988); *Comments to Conforming Revisions and Repeals*, 19 Cal. L. Revision Comm'n Reports 391, 450 (1988). The 1988 amendment conformed terminology to revisions made to the Probate Code in 1988. As to the 1988 amendment, see *Comments to Conforming Revisions and Repeals*, 19 Cal. L. Revision Comm'n Reports 1031, 1090 (1988). For background on the provisions of this chapter, see the Comment to this chapter under the chapter heading.

§ 6528. Declared homestead not affected

Comment. Section 6528 continues Section 6528 of the repealed Probate Code without change. This section makes clear the relationship between the probate homestead law and the declared homestead law. See Code Civ. Proc. §§ 704.910-704.990 (declared homestead). Although there is no longer a right of survivorship created by a declaration of homestead (1980 Cal. Stat. ch. 119, § 22), in the sense that the survivor no longer takes the decedent's interest in the property over a contrary testamentary disposition, a homestead declaration made by or for the benefit of a survivor nonetheless remains effective as to the survivor's interest in the property, notwithstanding dictum to the contrary in Estate of Grigsby, 134 Cal. App. 3d 611, 184 Cal. Rptr. 886 (1982).

Background on Section 6528 of Repealed Code

Section 6528 was a new provision added by 1983 Cal. Stat. ch. 842 § 55. For background on the provisions of this chapter, see the Comment to this chapter under the chapter heading.

CHAPTER 4. FAMILY ALLOWANCE

§ 6540. Persons for whom family allowance may be made

Comment. Section 6540 continues Section 6540 of the repealed Probate Code without change. The right of a surviving spouse to a family allowance may be waived in whole or in part, whether the waiver is executed before or during marriage. See Sections 140-147. As to the priority of the family allowance, see Section 11420. See also Sections 21400-21406 (abatement of shares of beneficiaries).

Background on Section 6540 of Repealed Code

Section 6540 was added by 1983 Cal. Stat. ch. 842 § 55. Subdivision (a) continued the substance of subdivision (a) of former Probate Code Section 680 (repealed by 1983 Cal. Stat. ch. 842 § 39). Subdivision (b) continued the substance of subdivision (b) of former Probate Code Section 680, with the addition of discretionary authority for the court to award family allowance to a parent of the decedent who was actually dependent in whole or in part on the decedent for support. Subdivision (c) continued the substance of former Probate Code Section 682 (repealed by 1983 Cal. Stat. ch. 842 § 39). For background on the provisions of this part, see the Comment to this part under the part heading.

§ 6541. Grant or modification; petition; notice of hearing

Comment. Section 6541 continues Section 6541 of the repealed Probate Code without substantive change. See also Section 1206 (notice to known heirs or known devisees). For general provisions, see Sections 1000-1004 (rules of practice), 1020-1023 (petitions and other papers), 1040-1050 (hearings and orders). For general provisions relating to notice of hearing, see Sections 1200-1221. See also Sections 1250-1252 (request for special notice), 1260-1265 (proof of giving notice). The notice provisions referred to in Section 6541 do not apply to a particular notice where the notice was delivered, mailed, posted, or first published before July 1, 1991. In such a case, the applicable law in effect before July 1, 1991, continues to apply to the giving of the notice. Section 1200(c). As to the application of any amendments made after that date, see Section 3. See also Section 48 ("interested person" defined).

Background on Section 6541 of Repealed Code

Section 6541 was added by 1983 Cal. Stat. ch. 842 § 55 and was amended by 1987 Cal. Stat. ch. 923 § 91. The section continued the substance of a portion of former Probate Code Section 681 (repealed by 1983 Cal. Stat. ch. 842 § 39). The 1987 amendments revised the provisions relating to notice. As to the 1987 amendment, see *Communication from California Law Revision Commission Concerning Assembly Bill 708*, 19 Cal. L. Revision Comm'n Reports 545, 561 (1988); *Comments to Conforming Revisions and Repeals*, 19 Cal. L. Revision Comm'n Reports 391, 450 (1988). For background on the provisions of this part, see the Comment to this part under the part heading.

§ 6542. Time of commencement of allowance

Comment. Section 6542 continues Section 6542 of the repealed Probate Code without change.

Background on Section 6542 of Repealed Code

Section 6542 was added by 1983 Cal. Stat. ch. 842 § 55. The section codified the previously existing practice. The prohibition against an order which is retroactive to a date earlier to a date earlier than the date of decedent's death continued the substance of a portion of subdivision (c) of former Probate Code Section 680 (repealed by 1983 Cal. Stat. ch. 842 § 39). For background on the provisions of this part, see the Comment to this part under the part heading.

§ 6543. Termination of allowance

Comment. Section 6543 restates Section 6543 of the repealed Probate Code without substantive change. The phrase "entry of the order for final distribution of the estate" has been substituted for "final settlement of the estate." See also Section 12203 (continuation of administration of the estate in order to pay family allowance).

Background on Section 6543 of Repealed Code

Section 6543 was added by 1983 Cal. Stat. ch. 842 § 55. Subdivision (a) continued portions of former Probate Code Section 680 (repealed by 1983 Cal. Stat. ch. 842 § 39). Subdivision (b) continued a portion of the first sentence of subdivision (a) of former Probate Code Section 681 (repealed by 1983 Cal. Stat. ch. 842 § 39). The authority in subdivision (b) for the court to make an order terminating a family allowance or to include a termination date in its original order was new, but was implied under the former sections. For background on the provisions of this part, see the Comment to this part under the part heading.

§ 6544. Cost of proceeding paid as expense of administration

Comment. Section 6544 continues Section 6544 of the repealed Probate Code without change.

Background on Section 6544 of Repealed Code

Section 6544 was added by 1983 Cal. Stat. ch. 842 § 55. The section continued the substance of former Probate Code Section 683 (repealed by 1983 Cal. Stat. ch. 842 § 39). For background on the provisions of this part, see the Comment to this part under the part heading.

§ 6545. No stay on appeal if undertaking furnished

Comment. Section 6545 continues Section 6545 of the repealed Probate Code without change. Concerning enforcement of liability on the undertaking, see Code Civ. Proc. §§ 996.410-996.495.

Background on Section 6545 of Repealed Code

Section 6545 was added by 1983 Cal. Stat. ch. 842 § 55. The section continued the substance of a portion of former Probate Code Section 684 (repealed by 1983 Cal. Stat. ch. 842 § 39). For background on the requirement of an undertaking, see *Recommendation Relating to Statutory Bonds and Undertakings*, 16 Cal. L. Revision Comm'n Reports 501, 610 (1982). For background on the provisions of this part, see the Comment to this part under the part heading.

CHAPTER 5. SPOUSE OR CHILD OMITTED FROM WILL

Article 1. Omitted Spouse

§ 6560. Share of omitted spouse who married testator after execution of will

Comment. Section 6560 continues Section 6560 of the repealed Probate Code without substantive change. This section does not adopt the intestate share for a surviving spouse as the omitted spouse's share. Instead, the section specifies the method to be used to determine the share

of the omitted spouse. The omitted spouse is not entitled to this share if the spouse was intentionally omitted from the will or has been otherwise provided for. See Section 6561.

As in the case of intestate succession, the omitted spouse takes all of the community and quasi-community property that is included in the testator's estate. In addition, with respect to the testator's separate property, the omitted spouse takes the lesser of an intestate share or one-half. By limiting the omitted spouse to a maximum of a one-half share of the decedent's separate property, Section 6560 permits the decedent's will to be given some effect with respect to the other half of the separate property. See Section 6562 (abatement of devises made by the will). See also Section 78 ("surviving spouse" defined).

This chapter does not apply if the decedent died before January 1, 1985. See Section 6580. As to the application of any amendments made after that date, see Section 3.

Background on Section 6560 of Repealed Code

Section 6560 was added by 1983 Cal. Stat. ch. 842 § 55 and was amended by 1984 Cal. Stat. ch. 892 § 45. The section superseded the portion of former Probate Code Section 70 (repealed by 1983 Cal. Stat. ch. 842 § 18) which had the effect of giving an omitted spouse the same share as the omitted spouse would have taken if the testator had died intestate. The 1984 amendments revised the section to provide that, with respect to the testator's separate property, the omitted spouse shall receive the lesser of an intestate share or one-half. See *Communication of Law Revision Commission Concerning Assembly Bill 2290*, 18 Cal. L. Revision Comm'n Reports 77, 90 (1986); *Recommendation Relating to Revision of Wills and Intestate Succession Law*, 17 Cal. L. Revision Comm'n Reports 537 (1984). For background on the provisions of this part, see the Comment to this part under the part heading.

§ 6561. Circumstances where spouse does not receive share

Comment. Section 6561 continues Section 6561 of the repealed Probate Code without change. This section is drawn in part from Section 2-301 of the Uniform Probate Code (1987). As to the construction of provisions drawn from uniform acts, see Section 2. Subdivision (a) is consistent with the comparable provision of Section 2-301 of the Uniform Probate Code. Subdivision (b) is the same in substance as a provision of Section 2-301 of the Uniform Probate Code. Subdivision (c) recognizes that a spouse may waive the right to take property of the other spouse by testate or intestate succession. See Sections 140-147. This chapter does not apply if the decedent died before January 1, 1985. See Section 6580. As to the application of any amendments made after that date, see Section 3.

Background on Section 6561 of Repealed Code

Section 6561 was added by 1983 Cal. Stat. ch. 842 § 55. The section superseded a portion of former Probate Code Section 70 (repealed by 1983 Cal. Stat. ch. 842 § 18).

Subdivision (a) continued the substance of a portion of former Probate Code Section 70. Unlike former Section 70, subdivision (b) of Section 6561 provided that the spouse does not receive a share if the testator provided for the spouse by a "transfer outside the will" that was intended to be in lieu of a testamentary provision; former Section 70 recognized only the case where "provision has been made for the spouse by marriage contract." Subdivision (c) was new. For background on the provisions of this part, see the Comment to this part under the part heading.

§ 6562. Manner of satisfying share of omitted spouse

Comment. Section 6562 continues Section 6562 of the repealed Probate Code without change. This chapter does not apply if the decedent died before January 1, 1985. See Section 6580. As to the application of any amendments made after that date, see Section 3. For the rule in other contexts, see Sections 6573 (omitted children), 21400-21406 (general rules on abatement).

Background on Section 6562 of Repealed Code

Section 6562 was a new provision added by 1983 Cal. Stat. ch. 842 § 55 and was amended by 1984 Cal. Stat. ch. 892 § 46. Section 6562 as enacted provided that the general California abatement rules applied for the purpose of satisfying the share of the omitted spouse. The 1984 amendment changed this to provide a proportional rule of abatement for payment of an omitted spouse's share, drawn from former Probate Code Section 91 (repealed by 1983 Cal. Stat. ch. 842 § 18). The second sentence of paragraph (2) of subdivision (a) (value determined at date of death) was a new provision added by the 1984 amendment. See *Recommendation Relating to Revision of Wills and Intestate Succession Law*, 17 Cal. L. Revision Comm'n Reports 537, 583 (1984). For background on the provisions of this part, see the Comment to this part under the part heading.

Article 2. Omitted Children

§ 6570. Share of omitted child born or adopted after execution of will

Comment. Section 6570 continues Section 6570 of the repealed Probate Code without substantive change. This chapter does not apply if the decedent died before January 1, 1985. See Section 6580. As to the application of any amendments made after that date, see Section 3. As to the intestate share of the omitted child, see Section 6401 and 6402.

An omitted child living when the will was made does not receive a share of the estate under Section 6570 unless the child is one described in Section 6572 (child omitted solely because the testator mistakenly believed the child to be dead or was unaware of the birth of the child). When the omission is not based on such mistaken belief, it is more likely than not that the omission was intentional. See Evans, *Should Pretermitted Issue Be Entitled to Inherit?*, 31 Calif. L. Rev. 263, 269 (1943); Niles, *Probate Reform in California*, 31 Hastings L.J. 185, 197 (1979).

Section 6570 does not protect omitted grandchildren or more remote issue of a deceased child of the testator. If the testator's child is deceased at the time the will is made and the testator omits to provide for a child of that child (the testator's grandchild), the omission would seem to be intentional in the usual case. If the testator's child is living when the will is made and is a named beneficiary under the will and dies before the testator leaving a child surviving, the testator's grandchild will be protected by the antilapse statute (Section 6147) which substitutes the deceased child's issue.

Although the omitted child may receive nothing under this article, the child may be eligible to receive exempt property (Sections 6510-6511), probate homestead (Sections 6520-6527), and family allowance (Sections 6540-6545), if in need of support after the testator's death. See also Section 26 ("child" defined).

Background on Section 6570 of Repealed Code

Section 6570 was added by 1983 Cal. Stat. ch. 842 § 55. Sections 6570-6572 superseded former Probate Code Section 90 (repealed by 1983 Cal. Stat. ch. 842 § 18). Section 6570 limited the children that were to be considered to be pretermitted children in two significant ways:

(1) Unlike former Section 90, an omitted child living when the will was made did not receive a share of the estate under Section 6570 unless the child was one described in Section 6572 (child omitted solely because the testator mistakenly believed the child to be dead or was unaware of the birth of the child).

(2) Unlike former Section 90, Section 6570 did not protect omitted grandchildren or more remote issue of a deceased child of the testator.

Former Section 90 gave an omitted child an intestate share in the deceased testator's estate. This rule was continued in Section 6570.

For background on the provisions of this part, see the Comment to this part under the part heading.

§ 6571. No share if child intentionally omitted or otherwise provided for

Comment. Section 6571 continues Section 6571 of the repealed Probate Code without substantive change. This section is the same in substance as a portion of Section 2-302 of the Uniform Probate Code (1987). As to the construction of provisions drawn from uniform acts, see Section 2. This chapter does not apply if the decedent died before January 1, 1985. See Section 6580. As to the application of any amendments made after that date, see Section 3.

Background on Section 6571 of Repealed Code

Section 6571 was added by 1983 Cal. Stat. ch. 842 § 55. Subdivision (a) continued the substance of the portion of former Probate Code Section 90 (repealed by 1983 Cal. Stat. ch. 842 § 18) that provided that the omitted child did not take if it appears from the will that such omission was intentional. See Estate of Smith, 9 Cal. 3d 74, 79-80, 507 P.2d 78, 106 Cal. Rptr. 774 (1973) (extrinsic evidence inadmissible to prove intent

to disinherit). Subdivision (b) was new. Subdivision (c) substituted more precise and complete language from Section 2-302 of the Uniform Probate Code (1987) for the phrase that the children "are unprovided for by any settlement, and have not had an equal proportion of the testator's property bestowed on them by way of advancement" which appeared in former Section 90. As to the construction of provisions drawn from uniform acts, see Section 2. For background on the provisions of this part, see the Comment to this part under the part heading.

§ 6572. Testator's erroneous belief

Comment. Section 6572 continues Section 6572 of the repealed Probate Code without change. This section is the same in substance as subsection (b) of Section 2-302 of the Uniform Probate Code (1987), but Section 6572 expands the Uniform Probate Code provision to include the case where the testator is unaware of the birth of the child. As to the construction of provisions drawn from uniform acts, see Section 2. This chapter does not apply if the decedent died before January 1, 1985. See Section 6580. As to the application of any amendments made after that date, see Section 3.

Background on Section 6572 of Repealed Code

Section 6572 was added by 1983 Cal. Stat. ch. 842 § 55. The section superseded a portion of former Probate Code Section 90 (repealed by 1983 Cal. Stat. ch. 842 § 18). Former Section 90 protected any omitted child in existence when the will was made, not just those children described in Section 6572. See the Comment to Section 6570. For background on the provisions of this part, see the Comment to this part under the part heading.

§ 6573. Manner of satisfying share of omitted child

Comment. Section 6573 continues Section 6573 of the repealed Probate Code without change. This section provides a proportional rule of abatement for payment of an omitted child's share. The section is consistent with Section 6562. The share of the omitted child is satisfied out of the testator's probate estate. This chapter does not apply if the decedent died before January 1, 1985. See Section 6580. As to the application of any amendments made after that date, see Section 3. For the rule in other contexts, see Sections 6562 (omitted spouse), 21400-21406 (general rules on abatement).

Background on Section 6573 of Repealed Code

Section 6573 was added by 1983 Cal. Stat. ch. 842 § 55 and was amended by 1984 Cal. Stat. ch. 892 § 47. The section superseded former Probate Code Section 91 (repealed by 1983 Cal. Stat. ch. 842 § 18). The 1984 amendment rewrote the section to provide a proportional rule of abatement. See *Recommendation Relating to Revision of Wills and Intestate Succession Law*, 17 Cal. L. Revision Comm'n Reports 537, 583-84 (1984). For background on the provisions of this part, see the Comment to this part under the part heading.

Article 3. Testator's Death Before January 1, 1985

§ 6580. Chapter not applicable where testator died before January 1, 1985

Comment. Section 6580 continues Section 6580 of the repealed Probate Code without substantive change. This section limits the application of Sections 6560-6573 to cases where the testator died on or after the operative date of those sections. Sections 6500-6545 are applicable to any proceeding pending on January 1, 1985, even though the decedent died before January 1, 1985. As to the application of any amendments made after that date, see Section 3.

Background on Section 6580 of Repealed Code

Section 6580 was a new provision added by 1984 Cal. Stat. ch. 892 § 48. See *Communication of Law Revision Commission Concerning Assembly Bill 2290*, 18 Cal. L. Revision Comm'n Reports 77, 90 (1986). See also *Recommendation Relating to Revision of Wills and Intestate Succession Law*, 17 Cal. L. Revision Comm'n Reports 537 (1984). For background on the provisions of this part, see the Comment to this part under the part heading.

CHAPTER 6. SMALL ESTATE SET-ASIDE

Comment. This chapter supersedes Chapter 6 (commencing with Section 6600) of Part 3 of Division 6 of the repealed Probate Code. The superseded chapter was enacted upon recommendation of the California Law Revision Commission. See *Recommendation Relating to Small Estate Set-Aside*, 18 Cal. L. Revision Comm'n Reports 1101 (1986). See also *Communication from California Law Revision Commission Concerning Assembly Bill 2625*, 18 Cal. L. Revision Comm'n Reports 1743, 1750-53 (1986). The Commission, in cooperation with California Continuing Education of the Bar, published the recommended legislation as enacted with official comments. See *Selected 1986 Trust and Probate Legislation*, 18 Cal. L. Revision Comm'n Reports 1201, 1597-1621 (1986).

§ 6600. "Decedent's estate" defined; exclusions in determining estate of the decedent or its value

Comment. Section 6600 continues Section 6600 of the repealed Probate Code without substantive change. As to a surviving spouse's waiver of rights at death, see Sections 140-47.

As defined in subdivision (a), "decedent's estate" is not limited to probate assets. The term includes all personal property, wherever located, and all real property located in this state, excluding the property described in subdivision (b). Subdivision (a) requires, for example, that the decedent's one-half share of the community and quasi-community property be included in determining the decedent's estate or its value,

whether or not the decedent's interest is set apart to the surviving spouse under Sections 13650-13660, unless the interest is excluded in determining the estate of the decedent under subdivision (b) as would be the case, for example, if the property is held in joint tenancy. This is consistent with prior law. Estate of Pezzola, 112 Cal. App. 3d 752, 169 Cal. Rptr. 464 (1980).

Subdivision (b) excludes any interest that terminates at death in determining the estate of the decedent or its value. If the interest is one that passes to another on the death of the decedent by virtue of a joint tenancy, a pay-on-death provision, or a contractual provision that provides that the interest is to be transferred or paid to another upon the death of the decedent, subdivision (b)(1) requires that the value of the interest be excluded in determining the estate of the decedent or its value. For example, if there is a policy of insurance on the decedent's life and the proceeds are payable to a named beneficiary (not to the decedent's estate), the insurance proceeds are excluded in determining the estate of the decedent or its value. Similarly, for example, if the decedent has a retirement plan that provides benefits to a surviving spouse, those benefits are excluded in determining the estate of the decedent or its value. Subdivision (b) also excludes, for example, life interests in trusts and life estates. See O. McCarroll, 1 California Decedent Estate Administration Supplement § 3.24, at 84-85 (Cal. Cont. Ed. Bar 1985).

This section does not apply if the decedent died before July 1, 1987. See Section 6614. As to the application of any amendments made after that date, see Section 3. A reference to a provision of the former statute is deemed to be a reference to the comparable provisions of this chapter. See Section 6615.

Background on Section 6600 of Repealed Code

Section 6600 was added by 1986 Cal. Stat. ch. 783 § 23 and amended by 1989 Cal. Stat. ch. 397 § 38. Subdivision (a) was a new provision that defined "decedent's estate." This definition replaced the phrase "the whole estate" used in former Probate Code Section 640 (repealed by 1986 Cal. Stat. ch. 783 § 9). Subdivision (a) made clear that real property located outside California is not included in determining the estate of the decedent or its value. The rule under former law was unclear. See Broll, *Summary Administration*, in 1 California Decedent Estate Administration § 3.24, at 129 (Cal. Cont. Ed. Bar 1971). Apparently real property outside California was not included under former law, since former Section 644 required "an inventory and appraisement to be prepared in the manner prescribed by law and filed within such time as the court may allow," and an inventory and appraisement does not include real property located outside California.

Subdivision (b) continued former Probate Code Section 647 (repealed by 1986 Cal. Stat. ch. 783 § 9) without substantive change. As to paragraph (2) of subdivision (b), see *Recommendation Relating to Nonprobate Transfers*, 16 Cal. L. Revision Comm'n Reports 129, 159 (1982).

The 1989 amendment conformed a reference to the definitional provisions to the renumbering of those provisions made by 1989 Cal. Stat. ch. 397. For background on the provisions of this chapter, see the Comment to this chapter under the chapter heading.

§ 6601. "Minor child" defined

Comment. Section 6601 continues Section 6601 of the repealed Probate Code without change. This determination whether a child is a minor is made at the time of the death of the decedent. This section does not apply if the decedent died before July 1, 1987. See Section 6614. As to the application of any amendments made after that date, see Section 3. A reference to a provision of the former statute is deemed to be a reference to the comparable provisions of this chapter. See Section 6615.

Background on Section 6601 of Repealed Code

Section 6601 was a new provision added by 1986 Cal. Stat. ch. 783 § 23. The section changed the rule under former Probate Code Section 645 (repealed by 1986 Cal. Stat. ch. 783 § 9) that, if the other statutory requirements were satisfied, the court could order that the estate be set aside "to such child or children of the decedent as may then be minors." The apparent result of this provision was that a child who was a minor at the time of the decedent's death was deprived of the right to a small estate set aside if the order was not made while the child was still a minor. The definition under Section 6601 avoided this result. For background on the provisions of this chapter, see the Comment to this chapter under the chapter heading.

§ 6602. Petition to set aside estate; maximum value

Comment. Section 6602 continues Section 6602 of the repealed Probate Code without change. The purpose of this chapter is to insure the support of the dependent surviving spouse and minor children (or any one or more of them) when the breadwinner is taken by death leaving but a small estate. This right to have a small estate set aside effectively forecloses the rights of a third person to inherit or otherwise receive a part of that estate under the decedent's will. Estate of Pezzola, 112 Cal. App. 3d 752, 169 Cal. Rptr. 464 (1980). Section 6602 limits the use of this chapter to a case where the decedent's estate, less liens and encumbrances and the value of any probate homestead interest, does not exceed $20,000. See also Section 6600 (defining "decedent's estate") and the Comment thereto. As to a surviving spouse's waiver of rights at death, see Sections 140-147.

This section does not apply if the decedent died before July 1, 1987. See Section 6614. As to the application of any amendments made after that date, see Section 3. A reference to a provision of the former statute is deemed to be a reference to the comparable provisions of this chapter. See Section 6615.

Background on Section 6602 of Repealed Code

Section 6602 was added by 1986 Cal. Stat. ch. 783 § 23. The section superseded former Probate Code Section 640 (repealed by 1986 Cal. Stat. ch. 783 § 9). For background on the provisions of this chapter, see the Comment to this chapter under the chapter heading.

§ 6603. Venue

Comment. Section 6603 continues Section 6603 of the repealed Probate Code without change. This section specifies the county in which the petition is to be filed. The section is consistent with a provision of Section 13650 (determination or confirmation of property passing or belonging to surviving spouse). This section does not apply if the decedent died before July 1, 1987. See Section 6614. As to the application of any amendments made after that date, see Section 3. A reference to a provision of the former statute is deemed to be a reference to the comparable provisions of this chapter. See Section 6615.

Background on Section 6603 of Repealed Code

Section 6603 was a new provision added by 1986 Cal. Stat. ch. 783 § 23. For background on the provisions of this chapter, see the Comment to this chapter under the chapter heading.

§ 6604. Contents of petition

Comment. Section 6604 continues Section 6604 of the repealed Probate Code without substantive change. Paragraph (1) of subdivision (b) implements Section 6603 (venue). Paragraph (2) of subdivision (b) is designed to implement the provision for giving notice of the hearing on the petition under this chapter. See Section 6607. Paragraph (7) of subdivision (b) is consistent with subdivision (d) of Section 6609 (court shall ensure that expenses of last illness, funeral charges, and expenses of administration are paid).

Paragraph (8) of subdivision (b) requires that the petition contain the information necessary so that the court may make an appropriate order under Section 6609. If the court makes an order under Section 6609, the court may set aside the small estate to the surviving spouse and minor children of the decedent, or to any one or more of them. See the Comment to 6609. The petition, for example, may request that the small estate be set aside to one of the minor children and that the other minor children and the spouse be excluded, or it may request that the small estate be set aside in unequal shares to the minor children. In determining whether to make such an order, the court must take into account the various considerations listed in subdivision (b) of Section 6609.

For general provisions, see Sections 1020-1023 (petitions and other papers). This section does not apply if the decedent died before July 1, 1987. See Section 6614. As to the application of any amendments made after that date, see Section 3. A reference to a provision of the former statute is deemed to be a reference to the comparable provisions of this chapter. See Section 6615.

Background on Section 6604 of Repealed Code

Section 6604 was added by 1986 Cal. Stat. ch. 783 § 23. Subdivision (a) continued the first portion of the first sentence of former Probate Code Section 641 (repealed by 1986 Cal. Stat. ch. 783 § 9) without substantive change. Subdivision (b) superseded the last sentence of former Section 641 which specified the contents of the petition. Paragraphs (1) and (2) of subdivision (b) were new. Paragraphs (3), (4), and (5) of subdivision (b) superseded the provision of former Probate Code Section 641 that required that the petition include "a specific description and an estimate of the value of all of the decedent's property" and "a list of all liens and encumbrances at the date of death." Paragraph (6) of subdivision (b) continued a requirement of former Probate Code Section 641 without substantive change. Paragraphs (7) and (8) of subdivision (b) were new. For background on the provisions of this chapter, see the Comment to this chapter under the chapter heading.

§ 6605. Filing of petition

Comment. Section 6605 continues Section 6605 of the repealed Probate Code without substantive change. This section does not apply if the decedent died before July 1, 1987. See Section 6614. As to the application of any amendments made after that date, see Section 3. A reference to a provision of the former statute is deemed to be a reference to the comparable provisions of this chapter. See Section 6615.

Background on Section 6605 of Repealed Code

Section 6605 was added by 1986 Cal. Stat. ch. 783 § 23. Subdivisions (a) and (b) continued the substance of portions of former Probate Code Section 641 (repealed by 1986 Cal. Stat. ch. 783 § 9) with language added to subdivision (a) to provide that a petition under this chapter may be filed in a pending probate proceeding "without the payment of an additional fee." The added language was drawn from Section 13652 (determination or confirmation of property passing or belonging to surviving spouse). Subdivision (c), which permitted a petition to be filed at any time prior to the final distribution of the estate, replaced the provision of former Section 641 which permitted a petition to be "filed at any time before the hearing on the petition for probate of the will or for letters of administration or after the filing of the inventory." For background on the provisions of this chapter, see the Comment to this chapter under the chapter heading.

§ 6606. Who may file

Comment. Section 6606 continues Section 6606 of the repealed Probate Code without substantive change. Paragraph (4) of subdivision (a) recognizes that the court is authorized to set aside a small estate to a child who is a minor at the time of the decedent's death (as distinguished from a requirement that the child be a minor at the time the petition is

filed or the time the court order under this chapter is made or some other time). See Section 6609(c). See also Section 6601 (defining "minor child"). Subdivision (b) is consistent with Section 13650(c) (determination or confirmation of property passing or belonging to surviving spouse). See also Section 13051(a) (collection or transfer of small estate without administration). As to a surviving spouse's waiver of rights at death, see Sections 140-147.

This section does not apply if the decedent died before July 1, 1987. See Section 6614. As to the application of any amendments made after that date, see Section 3. A reference to a provision of the former statute is deemed to be a reference to the comparable provisions of this chapter. See Section 6615.

Background on Section 6606 of Repealed Code

Section 6606 was added by 1986 Cal. Stat. ch. 783 § 23. The section continued the provisions of former Probate Code Section 641 (repealed by 1986 Cal. Stat. ch. 783 § 9) that described the persons authorized to file a petition and added paragraph (4) of subdivision (a) and all of subdivision (b), which were new provisions. For background on the provisions of this chapter, see the Comment to this chapter under the chapter heading.

§ 6607. Notice of hearing

Comment. Section 6607 continues Section 6607 of the repealed Probate Code without substantive change. See also Section 1206 (notice to known heirs or known devisees). Subdivision (b) is comparable to subdivision (a) of Section 13655 (determination or confirmation of property passing or belonging to surviving spouse). For general provisions relating to notice of hearing, see Sections 1200-1221. See also Sections 1250-1252 (request for special notice), 1260-1265 (proof of giving notice). This section does not apply if the decedent died before July 1, 1987. See Section 6614. As to the application of any amendments made after that date, see Section 3. A reference to a provision of the former statute is deemed to be a reference to the comparable provisions of this chapter. See Section 6615.

The notice provisions referred to in Section 6607 do not apply to a particular notice where the notice was delivered, mailed, posted, or first published before July 1, 1991. In such a case, the applicable law in effect before July 1, 1991, continues to apply to the giving of the notice. See Section 1200(c).

Background on Section 6607 of Repealed Code

Section 6607 was added by 1986 Cal. Stat. ch. 783 § 23 and was amended by 1987 Cal. Stat. ch. 923 § 92 and 1988 Cal. Stat. ch. 1199 § 78. Subdivision (a) continued the substance of subdivision (a) of former Probate Code Section 643 (repealed by 1986 Cal. Stat. ch. 783 § 9) but specified the persons to whom the notice of hearing is to be mailed in place of the reference to former Section 1200.5 contained in former Section

643 and added the requirement that a copy of the petition be mailed with the notice of hearing given to the surviving spouse, each child, and each devisee, who is not petitioning. Subdivision (b) superseded former Probate Code Section 642 (repealed by 1986 Cal. Stat. ch. 783 § 9). Subdivision (c) continued subdivision (b) of former Probate Code Section 643 (repealed by 1986 Cal. Stat. ch. 783 § 9) without substantive change but with the addition of the phrase "unless the court otherwise orders" at the end of the subdivision. The 1987 amendment revised the provisions relating to notice. As to the 1987 amendment, see *Communication from California Law Revision Commission Concerning Assembly Bill 708*, 19 Cal. L. Revision Comm'n Reports 545, 561-62 (1988); *Comments to Conforming Revisions and Repeals*, 19 Cal. L. Revision Comm'n Reports 391, 450 (1988). The 1988 amendment corrected section references and conformed terminology to revisions made in the Probate Code in 1988. As to the 1988 amendment, see *Comments to Conforming Revisions and Repeals*, 19 Cal. L. Revision Comm'n Reports 1031, 1090 (1988). For background on the provisions of this chapter, see the Comment to this chapter under the chapter heading.

§ 6608. Inventory and appraisal

Comment. Section 6608 continues Section 6608 of the repealed Probate Code without substantive change. This section does not apply if the decedent died before July 1, 1987. See Section 6614. As to the application of any amendments made after that date, see Section 3. A reference to a provision of the former statute is deemed to be a reference to the comparable provisions of this chapter. See Section 6615.

Background on Section 6608 of Repealed Code

Section 6608 was added by 1986 Cal. Stat. ch. 783 § 23 and was amended by 1988 Cal. Stat. ch. 1199 § 78.5. The section continued the requirement of former Probate Code Section 644 (repealed by 1986 Cal. Stat. ch. 783 § 9) that an inventory and appraisement be filed. The former provision was revised to conform to the then existing provisions relating to inventory and appraisement. See former Probate Code Sections 600-611 (repealed by 1988 Cal. Stat. ch. 1199 § 51). The requirement that the inventory and appraisement be filed before the hearing of the petition was substituted for the requirement of former Section 644 that the inventory and appraisement be filed within such time as the court may allow. The 1988 amendment corrected section references and conformed terminology to revisions made in the Probate Code in 1988. As to the 1988 amendment, see *Comments to Conforming Revisions and Repeals*, 19 Cal. L. Revision Comm'n Reports 1031, 1090 (1988). For background on the provisions of this chapter, see the Comment to this chapter under the chapter heading.

§ 6609. Court order

Comment. Section 6609 continues Section 6609 of the repealed Probate Code without substantive change. The court may decline to set aside a small estate if the court determines that it would be inequitable to do so. An appeal may be taken from an order made under this section. See Section 7240.

The court may assign the estate to the minor child or minor children of the decedent even if there is a surviving spouse. This may be desirable, for example, if the minor children live apart from the surviving spouse or where the minor children are not children of the surviving spouse. In this

respect, Section 6609 is consistent with Section 6510 (setting aside exempt property other than family dwelling) and Section 6521 (setting apart probate homestead).

The court may assign the estate to a surviving spouse even if the surviving spouse has remarried. Permitting the small estate to be set aside to a surviving spouse, whether or not remarried, makes Section 6609 consistent with Section 6510 (setting aside exempt property other than family dwelling) and Section 6521 (setting apart probate homestead). The last two sentences of subdivision (b) place on the remarried surviving spouse the burden of proof to establish the need for the small estate set aside.

Subdivision (b) specifies matters to be considered in determining whether to make an order under the section. Under some circumstances, the court may order that the small estate be set aside to one of the minor children and that the other minor children and the spouse be excluded, or that the small estate be set aside in unequal shares to the minor children, or that the small estate be set aside to the surviving spouse and that the minor children be excluded. In determining the assignment to make, the court must take into account the various considerations listed in subdivision (b). See also Section 6604(b)(8) (petition must include the requested disposition of the decedent's estate and the considerations justifying the requested disposition).

Under subdivision (d), the court may set aside a small estate whether or not expenses of last illness, funeral charges, and expenses of administration have been paid, but the court must make an appropriate order to ensure that they will be paid.

For general provisions, see Sections 1000-1004 (rules of practice), 1040-1050 (hearings and orders). This section does not apply if the decedent died before July 1, 1987. See Section 6614. As to the application of any amendments made after that date, see Section 3. A reference to a provision of the former statute is deemed to be a reference to the comparable provisions of this chapter. See Section 6615.

Background on Section 6609 of Repealed Code

Section 6609 was added by 1986 Cal. Stat. ch. 783 § 23. The section superseded former Probate Code Section 645 (repealed by 1986 Cal. Stat. ch. 783 § 9).

Section 6609 made these significant substantive changes in the former law:

(1) Under Section 6609, the court may decline to set aside a small estate if the court determines that it would be inequitable to do so. Under former Section 645, the court had no discretion; the court was required to set aside the small estate if the court made the findings prescribed by that section.

(2) Under Section 6609, the court may assign the estate to the minor child or minor children of the decedent even if there is a surviving spouse. Former law did not permit the small estate to be assigned to the minor child or children if there was an unmarried surviving spouse.

(3) Under Section 6609, the court may assign the estate to a surviving spouse even if the surviving spouse has remarried. Under former Section 645, the small estate could be set aside only to a "surviving spouse who has not theretofore remarried."

Subdivision (b) of Section 6609, which specifies matters to be considered in determining whether to make an order under the section, was a new provision drawn from subdivision (a) of Section 6523 which specifies matters to be considered in selecting and setting apart a probate homestead.

The word "mortgages," which was found in former Section 645, was omitted as unnecessary, mortgages being included within the phrase "liens and encumbrances."

Subdivision (d) of Section 6609 superseded the portion of the first sentence of former Section 645 that required expenses of last illness, funeral charges, and expenses of administration to be paid before the court could set aside a small estate. Under subdivision (d), the court may set aside a small estate whether or not such expenses have been paid, but the court must make an appropriate order to ensure that they will be paid.

Subdivision (e) of Section 6609 continued the last sentence of former Section 645, revised to reflect the new authority of the court to assign the small estate to one or more of the minor children of the decedent where there is a surviving spouse.

For background on the provisions of this chapter, see the Comment to this chapter under the chapter heading.

§ 6610. Effect of court order

Comment. Section 6610 continues Section 6610 of the repealed Probate Code without change. This section gives the order the same effect as an order under Section 13657 (effect of order determining or confirming property passing or belonging to surviving spouse). For general provisions, see Sections 1040-1050 (hearings and orders). This section does not apply if the decedent died before July 1, 1987. See Section 6614. As to the application of any amendments made after that date, see Section 3. A reference to a provision of the former statute is deemed to be a reference to the comparable provisions of this chapter. See Section 6615.

Background on Section 6610 of Repealed Code

Section 6610 was added by 1986 Cal. Stat. ch. 783 § 23. The section superseded former Probate Code Section 645.1 (repealed by 1986 Cal. Stat. ch. 783 § 9). The language in former Section 645.1 referring to fraud or the erroneously assumed deceased appearing has been omitted from Section 6610 as unnecessary. The omission of this language make no substantive change in the effect of the section. See McMillan v. Boese, 45 Cal. App. 2d 764, 115 P.2d 37 (1941). For background on the provisions of this chapter, see the Comment to this chapter under the chapter heading.

§ 6611. Liability for unsecured debts of decedent

Comment. Section 6611 continues Section 6611 of the repealed Probate Code without substantive change. The personal liability of a person who takes only a share or portion of the decedent's estate is limited to the net value of the share or portion (fair market value less liens and encumbrances and any probate homestead or exempt property set apart out of the share), rather than the net value of the entire estate.

Subdivision (e) is drawn from Section 13552 (liability for debts of deceased spouse). The subdivision is a limitation on the one-year limitation period of subdivision (c) where estate proceedings are commenced, and provides the same period as for creditors' claims in estate proceedings generally.

This section does not apply if the decedent died before July 1, 1987. See Section 6614. As to the application of any amendments made after that date, see Section 3. A reference to a provision of the former statute is deemed to be a reference to the comparable provisions of this chapter. See Section 6615.

Background on Section 6611 of Repealed Code

Section 6611 was added by 1986 Cal. Stat. ch. 783 § 23 and was amended by 1987 Cal. Stat. ch. 923 § 92.5. The section continued former Probate Code Section 645.3 (repealed by 1986 Cal. Stat. ch. 783 § 9) without substantive change, except as follows:

(1) Subdivision (b) of Section 6611 made clear that the personal liability of a person who takes only a share or portion of the decedent's estate is limited to the net value of the share or portion (fair market value less liens and encumbrances and any probate homestead or exempt property set apart out of the share), rather than the net value of the entire estate.

(2) Subdivision (e) of Section 6611 was new.

The 1987 amendment revised the provisions relating to notice. As to the 1987 amendment, see *Communication from California Law Revision Commission Concerning Assembly Bill 708*, 19 Cal. L. Revision Comm'n Reports 545, 560 (1988); *Comments to Conforming Revisions and Repeals*, 19 Cal. L. Revision Comm'n Reports 391, 450 (1988). For background on the provisions of this chapter, see the Comment to this chapter under the chapter heading.

§ 6612. Order where estate not set aside

Comment. Section 6612 continues Section 6612 of the repealed Probate Code without change. Under Section 6609, the court is required to deny a petition filed under this chapter if the decedent's estate is not a small estate (see Sections 6600, 6609), or if there is neither a surviving spouse nor a minor child. The court also may decline to order a small estate set-aside when it would be inequitable to do so. See Section 6609.

For general provisions, see Sections 1000-1004 (rules of practice), 1020-1023 (petitions and other papers), 1040-1050 (hearings and orders). This section does not apply if the decedent died before July 1, 1987. See Section 6614. As to the application of any amendments made after that date, see Section 3. A reference to a provision of the former statute is deemed to be a reference to the comparable provisions of this chapter. See Section 6615.

Background on Section 6612 of Repealed Code

Section 6612 was added by 1986 Cal. Stat. ch. 783 § 23. The section was drawn from former Probate Code Section 646 (repealed by 1986 Cal. Stat. ch. 783 § 9) but the language of the former section was revised to recognize that the court has discretion to

deny a petition filed under this chapter. See Section 6609. For background on the provisions of this chapter, see the Comment to this chapter under the chapter heading.

§ 6613. Attorney's fee

Comment. Section 6613 continues Section 6613 of the repealed Probate Code without substantive change. This section is the same as Section 13660 (petition for determination or confirmation of property passing or belonging to surviving spouse). Section 6613 continues former law and practice but gives the probate court authority to determine disputes concerning the attorney's fee for services performed in connection with the filing of a petition and the obtaining of a court order under this chapter. The court has no jurisdiction to determine disputes concerning attorney's fees for other services, such as termination of joint tenancies, collection of insurance, and the like.

For general provisions, see Sections 1000-1004 (rules of practice), 1020-1023 (petitions and other papers), 1040-1050 (hearings and orders). For general provisions relating to notice of hearing, see Sections 1200-1221. See also Sections 1250-1252 (request for special notice), 1260-1265 (proof of giving notice). This section does not apply if the decedent died before July 1, 1987. See Section 6614. As to the application of any amendments made after that date, see Section 3. A reference to a provision of the former statute is deemed to be a reference to the comparable provisions of this chapter. See Section 6615.

Background on Section 6613 of Repealed Code

Section 6613 was a new provision added by 1986 Cal. Stat. ch. 783 § 23. For background on the provisions of this chapter, see the Comment to this chapter under the chapter heading.

§ 6614. Chapter not applicable where decedent died before July 1, 1987

Comment. Section 6614 continues Section 6614 of the repealed Probate Code without substantive change. This section makes clear that Sections 6600-6613 do not apply if the decedent died before July 1, 1987, the operative date of those sections. If the decedent died before that date, the right to a small estate set-aside is determined under the law that was applicable prior to July 1, 1987. The application of Sections 6600 to 6613 does not apply if the decedent died before July 1, 1987 because in a case where the decedent died before that date there was a right to have a small estate set-aside. Under Sections 6600 to 6613, the court may decline to order a small estate set-aside when it would be inequitable to do so. See Section 6609.

Background on Section 6614 of Repealed Code

Section 6614 was added by 1986 Cal. Stat. ch. 783 § 23. The section superseded former Probate Code Section 647.5 (repealed by 1986 Cal. Stat. ch. 783 § 9). For

background on the provisions of this chapter, see the Comment to this chapter under the chapter heading.

§ 6615. Reference to provision of former law deemed reference to provision of this chapter

Comment. Section 6615 continues Section 6615 of the repealed Probate Code without substantive change. This section makes clear that, after the operative date of this chapter of the repealed Probate Code (July 1, 1987), a reference in a statute or written instrument to a provision of former law will be deemed to be a reference to the comparable provision of this chapter.

Background on Section 6615 of Repealed Code

Section 6615 was a new provision added by 1986 Cal. Stat. ch. 783 § 23. The section was drawn from former Probate Code Section 1490 and from former Probate Code Section 649.6 (repealed by 1986 Cal. Stat. ch. 783 § 9). For background on the provisions of this chapter, see the Comment to this chapter under the chapter heading.

PART 4. ESCHEAT OF DECEDENT'S PROPERTY

Comment. This part supersedes Part 4 (commencing with Section 6800) of Division 6 of the repealed Probate Code. The superseded part was enacted upon recommendation of the California Law Revision Commission. See *Tentative Recommendation Relating to Wills and Intestate Succession,* 16 Cal. L. Revision Comm'n Reports 2301 (1982). See also *Recommendation Relating to Escheat,* 8 Cal. L. Revision Comm'n Reports 1001 (1967).

§ 6800. Escheat of property of decedent

Comment. Section 6800 continues Section 6800 of the repealed Probate Code without substantive change.

Background on Section 6800 of Repealed Code

Section 6800 was added by 1983 Cal. Stat. ch. 842 § 55. The section continued the substance of subdivisions (a) and (b) of former Probate Code Section 231 (repealed by 1983 Cal. Stat. ch. 842 § 19). For background on the provisions of this part, see the Comment to this part under the part heading.

§ 6801. Real property in this state

Comment. Section 6801 continues Section 6801 of the repealed Probate Code without change.

Background on Section 6801 of Repealed Code

Section 6801 was added by 1983 Cal. Stat. ch. 842 § 55. The section continued former Probate Code Section 232 (repealed by 1983 Cal. Stat. ch. 842 § 19). For background on the provisions of this part, see the Comment to this part under the part heading.

§ 6802. Tangible personal property customarily kept in this state

Comment. Section 6802 continues Section 6802 of the repealed Probate Code without change.

Background on Section 6802 of Repealed Code

Section 6802 was added by 1983 Cal. Stat. ch. 842 § 55. The section continued former Probate Code Section 233 (repealed by 1983 Cal. Stat. ch. 842 § 19). For background on the provisions of this part, see the Comment to this part under the part heading.

§ 6803. Tangible personal property subject to control of superior court in this state

Comment. Section 6803 continues Section 6803 of the repealed Probate Code without substantive change. The words "and disposition" have been omitted as unnecessary, "administration" covering "disposition" as well as all other aspects of administration of a decedent's estate.

Background on Section 6803 of Repealed Code

Section 6803 was added by 1983 Cal. Stat. ch. 842 § 55 and was amended by 1988 Cal. Stat. ch. 1199 § 79. The section continued former Probate Code Section 234 (repealed by 1983 Cal. Stat. ch. 842 § 19). The 1988 amendment corrected a section reference. As to the 1988 amendment, see *Comments to Conforming Revisions and Repeals*, 19 Cal. L. Revision Comm'n Reports 1031, 1091 (1988). For background on the provisions of this part, see the Comment to this part under the part heading.

§ 6804. Intangible personal property of decedent domiciled in this state

Comment. Section 6804 continues Section 6804 of the repealed Probate Code without change.

Background on Section 6804 of Repealed Code

Section 6804 was added by 1983 Cal. Stat. ch. 842 § 55. The section continued former Probate Code Section 235 (repealed by 1983 Cal. Stat. ch. 842 § 19). For background on the provisions of this part, see the Comment to this part under the part heading.

§ 6805. Intangible personal property subject to control of superior court in this state

Comment. Section 6805 continues Section 6805 of the repealed Probate Code without substantive change. The words "and disposition" have been omitted as unnecessary, "administration" covering "disposition" as well as all other aspects of administration of a decedent's estate.

Background on Section 6805 of Repealed Code

Section 6805 was added by 1983 Cal. Stat. ch. 842 § 55 and was amended by 1988 Cal. Stat. ch. 1199 § 79.5. The section continued former Probate Code Section 236 (repealed by 1983 Cal. Stat. ch. 842 § 19). The 1988 amendment corrected a section reference. As to the 1988 amendment, see *Comments to Conforming Revisions and Repeals*, 19 Cal. L. Revision Comm'n Reports 1031, 1091 (1988). For background on the provisions of this part, see the Comment to this part under the part heading.

§ 6806. Benefits distributable from certain trusts

Comment. Section 6806 continues Section 6806 of the repealed Probate Code without substantive change.

Background on Section 6806 of Repealed Code

Section 6806 was added by 1983 Cal. Stat. ch. 842 § 55. The section continued subdivision (c) of former Probate Code Section 231 (repealed by 1983 Cal. Stat. ch. 842 § 19). For background on the provisions of this part, see the Comment to this part under the part heading.

DIVISION 7. ADMINISTRATION OF ESTATES OF DECEDENTS

PART 1. GENERAL PROVISIONS

CHAPTER 1. PASSAGE OF DECEDENT'S PROPERTY

Comment. This chapter supersedes Chapter 1 of Part 1 (commencing with Section 7000) of Division 7 of the repealed Probate Code. The superseded chapter was enacted upon recommendation of the California Law Revision Commission. See *Recommendation Relating to Rules of Procedure in Probate,* 19 Cal. L. Revision Comm'n Reports 917 (1988).

§ 7000. Passage of decedent's property

Comment. Section 7000 continues Section 7000 of the repealed Probate Code without change. The decedent's heirs are determined as provided in Part 2 (commencing with Section 6400) of Division 6 (intestate succession). The rule stated in Section 7000 is subject to limitations. See Section 7001 and the Comment thereto.

Background on Section 7000 of Repealed Code

Section 7000 was added by 1988 Cal. Stat. ch. 1199 § 80.5. The section restated the first part of former Probate Code Section 300 (repealed by 1988 Cal. Stat. ch. 1199 § 40) without substantive change. For background on the provisions of this chapter, see the Comment to this chapter under the chapter heading.

§ 7001. Limitations on passage of decedent's property

Comment. Section 7001 continues Section 7001 of the repealed Probate Code without change. Administration of the decedent's estate includes possession by the personal representative, control by the court, sale and other disposition of the property, charges of administration, and payment of debts and family allowance. The requirement of administration is subject to exceptions. See, e.g., Sections 5000 (contract rights), 5100-5407 (multiple party accounts), 13000-13660 (disposition without administration), 15000-18201 (trusts), and the law governing joint tenancy. For provisions relating to the rights of beneficiaries, creditors, and others, see, e.g., Sections 100-105 (effect of death of married person on community and quasi-community property), 260-295

(disclaimers), 6146-6147 (lapsed gifts), 6510-6511 (exempt property), 6520-6528 (probate homestead), 6540-6545 (family allowance), 6560-6573 (omitted spouse and children), 6600-6615 (small estate set-aside), 21400-21406 (abatement).

Background on Section 7001 of Repealed Code

Section 7001 was added by 1988 Cal. Stat. ch. 1199 § 80.5. The section restated the last part of former Probate Code Section 300 (repealed by 1988 Cal. Stat. ch. 1199 § 40) without substantive change. For background on the provisions of this chapter, see the Comment to this chapter under the chapter heading.

CHAPTER 2. JURISDICTION AND COURTS

Comment. This chapter supersedes Chapter 2 of Part 1 (commencing with Section 7050) of Division 7 of the repealed Probate Code. The superseded chapter was enacted upon recommendation of the California Law Revision Commission. See *Recommendation Relating to Rules of Procedure in Probate,* 19 Cal. L. Revision Comm'n Reports 917 (1988). See also *Communication from the California Law Revision Commission Concerning Assembly Bill 2841,* 19 Cal. L. Revision Comm'n Reports 1201, 1229-30 (1988).

Article 1. Jurisdiction and Venue

§ 7050. Jurisdiction and authority of court or judge

Comment. Section 7050 continues Section 7050 of the repealed Probate Code without change. Subdivision (a) is comparable to Section 2200 (jurisdiction of guardianship and conservatorship proceedings). Proceedings concerning administration of a decedent's estate include the probate of wills (Sections 8200-8272), appointment of personal representatives (Sections 8400-8577), and estate management (Sections 9600-10382). Where appropriate, the reference to the superior court in subdivision (a) means the department or judge of the court that deals with probate matters.

Subdivision (b) makes clear that the probate court, when considering cases brought before it under this division, has all the powers of the superior court exercising its general jurisdiction. Hence, while preserving the division of business among different departments of the superior court, this section rejects the limitation on the powers of the probate court that has been cited in appellate decisions. See, e.g., Copley v. Copley, 80 Cal. App. 3d 97, 106-08, 145 Cal. Rptr. 437 (1978). See also Section 17001 (full-power court under Trust Law). For general provisions, see Sections 1000-1004 (rules of practice), 1020-1023 (petitions and other papers), 1040-1050 (hearings and orders).

Background on Section 7050 of Repealed Code

Section 7050 was added by 1988 Cal. Stat. ch. 1199 § 80.5. Subdivision (a) restated a provision of former Probate Code Section 300 and the introductory part of former Probate Code Section 301 (provisions repealed by 1988 Cal. Stat. ch. 1199 § 40) without substantive change. Subdivision (b) expanded a provision of former Probate Code Section 321 ("judge may make and issue all necessary orders and writs to enforce production of wills and attendance of witnesses") (repealed by 1988 Cal. Stat. ch. 1199 § 40) and abandoned the former rule that the superior court sitting in probate was a court of limited jurisdiction. See 7 B. Witkin, Summary of California Law *Wills and Probate* §§ 233-34, at 5741-43 (8th ed. 1974). Subdivision (b) was revised by 1989 Cal. Stat. ch. 21 § 13 to make clear that the subdivision applies in estate administration proceedings throughout the code, whether pursuant to this division or any other division of the code. See *Communication from the California Law Revision Commission Concerning Assembly Bill 156*, 20 Cal. L. Revision Comm'n Reports 227, 230 (1990). For background on the provisions of this chapter, see the Comment to this chapter under the chapter heading.

§ 7051. Venue where decedent domiciled in this state

Comment. Section 7051 continues Section 7051 of the repealed Probate Code without change.

Background on Section 7051 of Repealed Code

Section 7051 was added by 1988 Cal. Stat. ch. 1199 § 80.5. The section restated without substantive change the venue provisions of former Probate Code Section 301 (repealed by 1988 Cal. Stat. ch. 1199 § 40) applicable to domiciliaries. The substitution of "domicile" for "residence" codified case law. See, e.g., Estate of Phillips, 269 Cal. App. 2d 656, 659, 75 Cal. Rptr. 301 (1969); Estate of Brace, 180 Cal. App. 2d 797, 802, 4 Cal. Rptr. 683 (1960); Estate of Glassford, 114 Cal. App. 2d 181, 186, 249 P.2d 908 (1952). For background on the provisions of this chapter, see the Comment to this chapter under the chapter heading.

§ 7052. Venue where decedent not domiciled in this state

Comment. Section 7052 continues Section 7052 of the repealed Probate Code without substantive change. See also Section 12511 (ancillary administration).

Background on Section 7052 of Repealed Code

Section 7052 was added by 1988 Cal. Stat. ch. 1199 § 80.5. The section restated the nondomiciliary venue provisions of former Probate Code Section 301 (repealed by 1988 Cal. Stat. ch. 1199 § 40) without substantive change. The substitution of "domicile" for "residence" codified case law. See the Background portion of the Comment to Section 7051. For background on the provisions of this chapter, see the Comment to this chapter under the chapter heading.

Article 2. Disqualification of Judge

§ 7060. Disqualification of judge

Comment. Section 7060 continues Section 7060 of the repealed Probate Code without change. For general provisions on disqualification, see Code Civ. Proc. §§ 170-170.8.

Background on Section 7060 of Repealed Code

Section 7060 was added by 1988 Cal. Stat. ch. 1199 § 80.5. Subdivisions (a) and (b) restated subdivision (a) of former Probate Code Section 303 (repealed by 1988 Cal. Stat. ch. 1199 § 40) without substantive change. Subdivision (c) restated subdivision (c) of former Section 303 (repealed by 1988 Cal. Stat. ch. 1199 § 40) without substantive change. See *Communication from the California Law Revision Commission Concerning Assembly Bill 2841*, 19 Cal. L. Revision Comm'n Reports, 1201, 1230 (1988). Subdivision (a) was revised by 1989 Cal. Stat. ch. 21 § 14 to make clear that the subdivision applies in estate administration proceedings throughout the code, whether pursuant to this division or any other division of the code. See *Communication from the California Law Revision Commission Concerning Assembly Bill 156*, 20 Cal. L. Revision Comm'n Reports 227, 230 (1990). For background on the provisions of this chapter, see the Comment to this chapter under the chapter heading.

Article 3. Transfer of Proceedings

§ 7070. Grounds for transfer

Comment. Section 7070 continues Section 7070 of the repealed Probate Code with a revision to make clear that the section applies in estate administration proceedings throughout the code, whether pursuant to this division or any other division of the code.. Transfer of a proceeding under this article is in the same manner and with the same effect as transfer of actions and proceedings under the Code of Civil Procedure. See Section 1000 (general rules of practice govern); Code Civ. Proc. § 399 (transmittal of papers; jurisdiction of receiving court).

Background on Section 7070 of Repealed Code

Section 7070 was added by 1988 Cal. Stat. ch. 1199 § 80.5. The section restated part of subdivision (b) of former Probate Code Section 303 (repealed by 1988 Cal. Stat. ch. 1199 § 40) without substantive change. For background on the provisions of this chapter, see the Comment to this chapter under the chapter heading.

§ 7071. Place of transfer

Comment. Section 7071 continues Section 7071 of the repealed Probate Code without change.

Background on Section 7071 of Repealed Code

Section 7071 was a new provision added by 1988 Cal. Stat. ch. 1199 § 80.5. The provision for transfer to an adjoining county continued a provision of subdivision (b) of former Probate Code Section 303 (repealed by 1988 Cal. Stat. ch. 1199 § 40). For background on the provisions of this chapter, see the Comment to this chapter under the chapter heading.

§ 7072. Retransfer

Comment. Section 7072 continues Section 7072 of the repealed Probate Code with the substitution of "before entry of the order for final distribution of the estate" for "before the administration of the estate is closed.". For general provisions, see Sections 1000-1004 (rules of practice), 1020-1023 (petitions and other papers), 1040-1050 (hearings

and orders). For general provisions relating to notice of hearing, see Sections 1200-1221. See also Sections 1250-1252 (request for special notice), 1260-1265 (proof of giving notice).

Background on Section 7072 of Repealed Code

Section 7072 was added by 1988 Cal. Stat. ch. 1199 § 80.5. The section restated part of former Probate Code Section 305 (repealed by 1988 Cal. Stat. ch. 1199 § 40) but made retransfer permissive rather than mandatory. For background on the provisions of this chapter, see the Comment to this chapter under the chapter heading.

CHAPTER 3. RULES OF PROCEDURE

Comment. This chapter supersedes Chapter 3 of Part 1 (commencing with Section 7200) of Division 7 of the repealed Probate Code. The superseded chapter was enacted upon recommendation of the California Law Revision Commission. See *Recommendation Relating to Rules of Procedure in Probate,* 19 Cal. L. Revision Comm'n Reports 917 (1988). See also *Communication from the California Law Revision Commission Concerning Assembly Bill 2841,* 19 Cal. L. Revision Comm'n Reports 1201, 1230-31 (1988); *Recommendation Relating to Notice in Probate Proceedings,* 19 Cal. L. Revision Comm'n Reports 357, 383-90 (1988).

Article 1. Trial by Jury

§ 7200. Trial by jury

Comment. Section 7200 continues Section 7200 of the repealed Probate Code without change. For comparable provisions, see Sections 1452 (Guardianship-Conservatorship Law) and 17006 (Trust Law).

Background on Section 7200 of Repealed Code

Section 7200 was added by 1988 Cal. Stat. ch. 1199 § 80.5. The section continued the general rule under prior law that there is no right to a jury in probate proceedings unless that right is granted by statute. Estate of Beach, 15 Cal. 3d 623, 642, 542 P.2d 994, 125 Cal. Rptr. 570 (1975) cert. denied 434 U.S. 1046 (1978); Heiser v. Superior Court, 88 Cal. App. 3d 276, 278-80, 151 Cal. Rptr. 745 (1979). The section superseded the third and fourth sentences of former Probate Code Section 1280 (repealed by 1988 Cal. Stat. ch. 1199 § 64.5) as applicable to estate administration proceedings. Former Section 1280 restated former Section 1230 (repealed by 1987 Cal. Stat. ch. 923 § 59) without substantive change. The reference to Title 9 (commencing with Section 680.010) of Part 2 of the Code of Civil Procedure was substituted in former Section 1280 for the former reference in former Section 1230 to "enforced by execution or otherwise . . . as in civil actions." This was a nonsubstantive change. Section 7200 was revised by 1989 Cal. Stat. ch. 21 § 15 to make clear that the section applies in estate administration proceedings throughout the code, whether pursuant to this division or any other division of the code. See *Communication from the California Law Revision Commission Concerning Assembly Bill 156,* 20 Cal. L. Revision Comm'n Reports 227, 230 (1990). For background on the provisions of this chapter, see the Comment to this chapter under the chapter heading.

Article 2. New Trials

§ 7220. New trial

Comment. Section 7220 continues Section 7220 of the repealed Probate Code without substantive change. There is no right to a jury trial unless expressly provided by statute. See Section 7200 (trial by jury).

Background on Section 7220 of Repealed Code

Section 7220 was added by 1988 Cal. Stat. ch. 1199 § 80.5. The section restated former Probate Code Section 1281 (repealed by 1988 Cal. Stat. ch. 1199 § 64.5) without substantive change. Former Section 1281 continued former Probate Code Section 1231 (repealed by 1987 Cal. Stat. ch. 923 § 59) without change. For background on the provisions of this chapter, see the Comment to this chapter under the chapter heading.

Article 3. Appeals

§ 7240. Appealable orders and refusals to make orders

Comment. Section 7240 continues Section 7240 of the repealed Probate Code without substantive change. See Section 52 (defining "letters"). See also Section 11956 (proceedings leading to partition, allotment, or other division may be reviewed on appeal from the order for distribution), 20123 (order or refusal to make order relating to proration of estate taxes), 20223 (order or refusal to make order relating to proration of taxes on generation-skipping transfer).

Background on Section 7240 of Repealed Code

Section 7240 was added by 1988 Cal. Stat. ch. 1199 § 80.5. The section restated former Probate Code Section 1297 (repealed by 1988 Cal. Stat. ch. 1199 § 64.5) without substantive change, except as follows:

(1) Subdivision (a) codified the former rules that orders granting or revoking letters of administration with the will annexed are appealable, but that letters of special administration or letters of special administration with general powers are not. See Estate of Smith, 175 Cal. App. 2d 803, 805, 1 Cal. Rptr. 46 (1959) (appeal of order appointing public administrator as administrator with the will annexed); Estate of Hughes, 77 Cal. App. 3d 899, 901-02, 143 Cal. Rptr. 858 (1978) (order refusing to revoke letters of special administration not appealable); former Probate Code Sections 461, 465 (provisions repealed by 1988 Cal. Stat. ch. 1199 § 46) (order of appointment not appealable; order granting general administrator powers not appealable).

(2) Language in subdivision (e) permitting appeal of an order terminating a family allowance was new.

(3) Subdivision (g) relating to options was not limited to real property options as was subdivision (g) of former Section 1297.

(4) The right to appeal from an order relating to determination of heirship (subdivision (m) of former Section 1297) was omitted because this procedure was not continued. See also Section 7242 (transitional provision).

(5) Subdivision (p) of former Section 1297 relating to appeals concerning inheritance tax was replaced by Section 7242 (transitional provision).

Former Section 1297 restated former Probate Code Section 1240 (repealed by 1987 Cal. Stat. ch. 923 § 59) without substantive change and revised cross-references.

For background on the provisions of this chapter, see the Comment to this chapter under the chapter heading.

§ 7241. Stay on appeal

Comment. Section 7241 continues Section 7241 of the repealed Probate Code without change. This section is comparable to Section 2751 (stay on appeal in guardianship and conservatorship law). Subdivision (a) is consistent with the case-law rule under former law that the appeal of an order appointing a personal representative suspends the powers of the personal representative and stays proceedings in the probate court. See Estate of Hultin, 29 Cal. 2d 825, 833, 178 P.2d 756 (1947); Estate of Gibson, 233 Cal. App. 2d 125, 127-30, 43 Cal. Rptr. 302 (1965). However, the powers of a personal representative that are not the subject of an appeal are not affected by the appeal and may be exercised as appropriate. See also Code Civ. Proc. § 917.9 (discretion to require undertaking in case of automatic stay); Prob. Code § 7250 (effect of final order).

Background on Section 7241 of Repealed Code

Section 7241 was a new provision added by 1988 Cal. Stat. ch. 1199 § 80.5. For background on the provisions of this chapter, see the Comment to this chapter under the chapter heading.

§ 7242. Transitional provision

Comment. Section 7242 continues Section 7242 of the repealed Probate Code without substantive change. This section provides a rule governing appeals from procedures that are not continued. See the Comment to Section 7240.

Background on Section 7242 of Repealed Code

Section 7242 was added by 1988 Cal. Stat. ch. 1199 § 80.5. The section restated subdivisions (m) and (p) of former Probate Code Section 1297 (repealed by 1988 Cal. Stat. ch. 1199 § 64.5). For background on the provisions of this chapter, see the Comment to this chapter under the chapter heading.

Article 3.5. Judgments and Orders

§ 7250. Effect of court authorization or approval

Comment. Subdivision (a) of Section 7250 continues Section 9612 of the repealed Probate Code without substantive change. Subdivision (b) is new but continues the substance of subdivision (b) and paragraph (3) of subdivision (c) of Section 9645 of the repealed Probate Code insofar as those provisions applied to Section 9612 of the repealed Probate Code.

Section 7250 is comparable to subdivision (a) of Section 2103 (Guardianship-Conservatorship Law). The section is subject to case law exceptions relating to extrinsic fraud. See, e.g., Bank of America v. Superior Court, 181 Cal. App. 3d 705, 226 Cal. Rptr. 685 (1986);

Lazzarone v. Bank of America, 181 Cal. App. 3d 581, 226 Cal. Rptr. 855 (1986); 8 B. Witkin, California Procedure *Attack on Judgment in Trial Court* § 198, at 596-97, §§ 204-07, at 602-07 (3d ed. 1985). See also Section 8007 (effect of order admitting will to probate or appointing a personal representative), 8272 (effect of revocation of probate of will on acts of personal representative before the revocation), 8406 (effect of reversal of order appointing personal representative on acts of personal representative before reversal), 8525 (acts before a vacancy occurs), 9805 (liability on note and security instrument), 9806 (effectiveness of encumbrance), 9838 (effectiveness of order authorizing a compromise or settlement that requires the transfer of real property of estate), 9868 (order for execution of conveyance or transfer of property claimed to belong to decedent or other person), 9923 (order for exchange of property), 9948 (order for lease), 9966 (order authorizing granting of option to purchase property), 9983 (order that property be transferred pursuant to option to purchase given in will), 10264 (order for sale of personal property), 10316 (order for sale of real property), 11705 (order determining persons entitled to distribution of decedent's estate and their shares), 12250 (order discharging personal representative).

Background on Section 7250 of the new Probate Code

Section 7250 continues the substance of Section 9612 of the repealed Probate Code. Section 9612 was a new provision added by 1987 Cal. Stat. ch. 923 § 93. The section generalized provisions such as the last sentence of former Probate Code Section 718.5 (repealed by 1987 Cal. Stat. ch. 923 § 37). For background, see *Recommendation Relating to Supervised Administration of Decedent's Estate,* 19 Cal. L. Revision Comm'n Reports 5 (1988). The section was amended by 1989 Cal. Stat. ch. 21 § 23 to make clear that the section applies in estate administration proceedings throughout the code, whether pursuant to this division or any other division of the code.

Article 4. Orders and Transactions Affecting Property

§ 7260. "Transaction" defined

Comment. Section 7260 continues Section 7260 of the repealed Probate Code without change. This section is comparable to Section 2111(a) (Guardianship-Conservatorship Law).

Background on Section 7260 of Repealed Code

Section 7260 was a new provision added by 1988 Cal. Stat. ch. 1199 § 80.5. For background on the provisions of this chapter, see the Comment to this chapter under the chapter heading.

§ 7261. Court-ordered real property transaction; statement in instrument

Comment. Section 7261 continues Section 7261 of the repealed Probate Code without change. This section is comparable to Section 2111(c) (Guardianship-Conservatorship Law) and is consistent with

several provisions in other parts of the code. See Sections 9805 (execution of encumbrance), 9838 (compromise or settlement), 9948 (execution of lease), 10314 (conveyance or assignment after confirmation). See also Section 7250 (effect of court authorization or approval).

Background on Section 7261 of Repealed Code

Section 7261 was a new provision added by 1988 Cal. Stat. ch. 1199 § 80.5. For background on the provisions of this chapter, see the Comment to this chapter under the chapter heading.

§ 7262. Effect of court-ordered transaction

Comment. Section 7262 continues Section 7262 of the repealed Probate Code without change. This section is comparable to Section 2111(d) (Guardianship-Conservatorship Law) and is consistent with several provisions in other parts of the code. See also Sections 7250 (effect of court authorization or approval), 9805 (liability on note or security instrument), 9806 (effectiveness of encumbrance), 9838 (compromise or settlement), 9868 (effectiveness of order in proceedings involving property claimed by another), 9948 (effectiveness of lease), 10314 (conveyance or assignment after confirmation). See also Section 8007 (effect of order admitting will to probate or appointing a personal representative), 8272 (effect of revocation of probate of will on acts of personal representative before the revocation), 8406 (effect of reversal of order appointing personal representative on acts of personal representative before reversal), 9868 (effect of order for execution of conveyance or transfer of property claimed to belong to decedent or other person), 9923 (effect of order for exchange of property), 9948 (effect of order for lease), 9966 (effect of order authorizing granting of option to purchase property), 9983 (effect of order that property be transferred pursuant to option to purchase given in will), 10264 (effect of order for sale of personal property), 10314 (effect of conveyance or assignment made in connection with order for sale of real property), 10316 (effect of order for sale of real property), 11605 (effect of order for distribution), 11705 (order determining persons entitled to distribution of decedent's estate and their shares), 12408 (order for final distribution of estate of missing person), 13657 (order determining that property is property passing to surviving spouse or confirming the ownership of the surviving spouse of property belonging to the surviving spouse).

Whether or not after-acquired title is passed by an instrument executed by the personal representative depends on the terms of the instrument. See generally 4 B. Witkin, Summary of California Law *Real Property* § 136, at 351-52, § 212, at 417-18 (9th ed. 1987). But see Section 9838 (compromise or settlement).

Background on Section 7262 of Repealed Code

Section 7262 was a new provision added by 1988 Cal. Stat. ch. 1199 § 80.5. For background on the provisions of this chapter, see the Comment to this chapter under the chapter heading.

§ 7263. Recording of order affecting title to real property

Comment. Section 7263 continues Section 7263 of the repealed Probate Code without substantive change. Recordation of an order for distribution of real property has the effect of a receipt by the distributee. See Section 11751. See also Sections 9838 (compromise or settlement), 11902 (recording order for distribution of property to state).

Background on Section 7263 of Repealed Code

Section 7263 was added by 1988 Cal. Stat. ch. 1199 § 80.5. The section restated all but the last clause of former Probate Code Section 1292 (repealed by 1988 Cal. Stat. ch. 1199 § 64.5) (recordation of order affecting real property) without substantive change. Former Section 1292 continued former Probate Code Section 1222 (repealed by 1987 Cal. Stat. ch. 923 § 59) without substantive change. For background on the provisions of this chapter, see the Comment to this chapter under the chapter heading.

Article 5. United States as Interested Person

§ 7280. Rights of United States where federal allowance made to decedent's estate

Comment. Section 7280 restates Section 7280 of the repealed Probate Code without substantive change. See Section 58 ("personal representative" defined).

Background on Section 7280 of Repealed Code

Section 7280 was added by 1988 Cal. Stat. ch. 1199 § 80.5. The section restated former Probate Code Section 1288 (repealed by 1988 Cal. Stat. ch. 1199 § 64.5) without substantive change. Former Section 1288 restated former Probate Code Section 1203 (repealed by 1987 Cal. Stat. ch. 923 § 59) without substantive change. For background on the provisions of this chapter, see the Comment to this chapter under the chapter heading.

CHAPTER 4. PUBLIC ADMINISTRATORS

Comment. This chapter supersedes Chapter 4 of Part 1 (commencing with Section 7600) of Division 7 of the repealed Probate Code. The superseded chapter was enacted upon recommendation of the California Law Revision Commission. See *Recommendation Relating to Public Guardians and Administrators,* 19 Cal. L. Revision Comm'n Reports 707 (1988).

Article 1. Taking Temporary Possession or Control of Property

§ 7600. Report of public employee to inform public administrator

Comment. Section 7600 continues Section 7600 of the repealed Probate Code without change.

Background on Section 7600 of Repealed Code

Section 7600 was added by 1988 Cal. Stat. ch. 1199 § 80.5. The section restated former Probate Code Section 1146 (repealed by 1988 Cal. Stat. ch. 1199 § 57.5) without substantive change. For background on the provisions of this chapter, see the Comment to this chapter under the chapter heading.

§ 7600.5. Giving notice of death of patient to public administrator

Comment. Section 7600.5 continues Section 7600.5 of the repealed Probate Code without change.

Background on Section 7600.5 of Repealed Code

Section 7600.5 was added by 1988 Cal. Stat. ch. 1199 § 80.5. The section superseded former Probate Code Section 1145 (repealed by 1988 Cal. Stat. ch. 1199 § 57.5). For background on the provisions of this chapter, see the Comment to this chapter under the chapter heading.

§ 7601. Duty of public administrator to take control of property

Comment. Section 7601 continues Section 7601 of the repealed Probate Code without change. The public administrator may also be appointed special administrator for the property. See Sections 8540-8541 (special administrators).

Background on Section 7601 of Repealed Code

Section 7601 was added by 1988 Cal. Stat. ch. 1199 § 80.5. The section restated the first sentence of subdivision (a) of former Probate Code Section 1140 (repealed by 1988 Cal. Stat. ch. 1199 § 57.5), with the addition of (1) misappropriation as a ground for taking possession or control, (2) express provisions relating to notice and hearing, and (3) an express immunity in the case of property that is beyond the control of the public administrator. For background on the provisions of this chapter, see the Comment to this chapter under the chapter heading.

§ 7602. Search for property, will, and instructions for disposition of remains

Comment. Section 7602 continues Section 7602 of the repealed Probate Code without change.

Background on Section 7602 of Repealed Code

Section 7602 was added by 1988 Cal. Stat. ch. 1199 § 80.5. The section restated the first portion of subdivision (a) and subdivision (b) of former Probate Code Section 1141 (repealed by 1988 Cal. Stat. ch. 1199 § 57.5) but eliminated the requirement that there be reasonable grounds to believe that the public administrator may be appointed personal representative. For background on the provisions of this chapter, see the Comment to this chapter under the chapter heading.

§ 7603. Providing information and access to public administrator

Comment. Section 7603 restates Section 7603 of the repealed Probate Code without substantive change. The reference to the county recorder has been omitted from subdivision (d)(2) as unnecessary since the county recorder's only involvement is to record the written certification of the public administrator in the county real property records. Other

nonsubstantive changes have been made. This section is comparable to Section 2901 (providing information and access to public guardian).

Background on Section 7603 of Repealed Code

Section 7603 was added by 1988 Cal. Stat. ch. 1199 § 80.5. The section restated the last portion of subdivision (a) and subdivision (c) of former Probate Code Section 1141 (repealed by 1988 Cal. Stat. ch. 1199 § 57.5) with the elimination of the requirement that there be reasonable grounds to believe the public administrator may be appointed personal representative and with the addition of subdivisions (b) and (c)(3) and the imposition of a five-day effective period for the written certification. For background on the provisions of this chapter, see the Comment to this chapter under the chapter heading.

§ 7604. Subsequent appointment of another as personal representative; public administrator's expenses and fees

Comment. Section 7604 continues Section 7604 of the repealed Probate Code without substantive change. The public administrator's compensation and expenses under this section are an expense of administration and thus subject to court order for payment. See Section 11422 (payment of debts on court order). For a comparable provision relating to the public guardian, see Section 2902.

Background on Section 7604 of Repealed Code

Section 7604 was added by 1988 Cal. Stat. ch. 1199 § 80.5. The section restated former Probate Code Section 1144.5 (repealed by 1988 Cal. Stat. ch. 1199 § 57.5). For background on the provisions of this chapter, see the Comment to this chapter under the chapter heading.

Article 2. Appointment as Personal Representative

§ 7620. Petition for appointment; court-ordered appointment

Comment. Section 7620 continues Section 7620 of the repealed Probate Code without change. For priority for appointment as personal representative, see Section 8461. See also Sections 7050-7051 (jurisdiction and venue of probate proceedings). For general provisions, see Sections 1000-1004 (rules of practice), 1020-1023 (petitions and other papers), 1040-1050 (hearings and orders). As to the surviving spouse's waiver of rights at death, see Sections 140-147.

Background on Section 7620 of Repealed Code

Section 7620 was added by 1988 Cal. Stat. ch. 1199 § 80.5. Subdivisions (a) and (b) of Section 7620 restated the second sentence of subdivision (a) of former Probate Code Section 1140 (repealed by 1988 Cal. Stat. ch. 1199 § 57.5) without substantive change. Subdivision (c) was new. For background on the provisions of this chapter, see the Comment to this chapter under the chapter heading.

§ 7621. Procedure for appointment; bond fee

Comment. Section 7621 continues Section 7621 of the repealed Probate Code without substantive change. Letters issued to "the public administrator" under subdivision (c) are sufficient to enable a successor

public administrator to act without issuance of new letters. See Gov't Code § 27444 (expiration of term of office). Subdivision (d) is comparable to Section 2942(c) (public guardian). The amount allowed under subdivision (d) is half the amount allowed for the bond of a personal representative generally under former Section 541.5 (repealed by 1988 Cal. Stat. ch. 1199, § 48). Removal of the public administrator is subject to the same procedures as removal of administrators generally, including removal at the request of a person having a higher priority for appointment. See Section 8503.

Background on Section 7621 of Repealed Code

Section 7621 was added by 1988 Cal. Stat. ch. 1199 § 80.5. The section restated subdivision (b) of former Probate Code Section 1140 (repealed by 1988 Cal. Stat. ch. 1199 § 57.5), with the addition in Section 7621 of subdivisions (b) and (c) and the provision of subdivision (d) allowing the county to recoup a bond fee. For background on the provisions of this chapter, see the Comment to this chapter under the chapter heading.

§ 7622. Manner of administration; compensation of public administrator

Comment. Section 7622 continues Section 7622 of the repealed Probate Code without substantive change, except that the reference to the compensation of the public administrator's attorney in the first sentence of subdivision (b) is omitted because this division no longer determines compensation of the personal representative's attorney. See Section 9681 (compensation determined by agreement). The public administrator must file an inventory, commence actions for the recovery or protection of property, render accounts, and deliver the property of the estate in the same manner as personal representatives generally. See also Sections 7621(d) (bond fee), 7623 (additional compensation), 7666 (compensation when summary disposition procedure used).

Background on Section 7622 of Repealed Code

Section 7622 was added by 1988 Cal. Stat. ch. 1199 § 80.5. The section restated former Probate Code Section 1142 (repealed by 1988 Cal. Stat. ch. 1199 § 57.5) without substantive change. The section was amended by 1989 Cal. Stat. ch. 21 § 16 to make clear that the section applies in estate administration proceedings throughout the code, whether pursuant to this division or any other division of the code, and to incorporate provisions added by Chapter 280 of the Statutes of 1988. See *Communication from the California Law Revision Commission Concerning Assembly Bill 156*, 20 Cal. L. Revision Comm'n Reports 227, 230 (1990). For background on the provisions of this chapter, see the Comment to this chapter under the chapter heading.

§ 7623. Additional compensation

Comment. Section 7623 continues Section 7623 of the repealed Probate Code without change. This section does not apply in any proceeding for administration of a decedent's estate commenced before

January 1, 1991. See Section 900. As to the law applicable to proceedings commenced before January 1, 1991, see Section 900. As to the application of any amendments made after that date, see Section 3.

Background on Section 7623 of Repealed Code

Section 7623 was added by 1988 Cal. Stat. ch. 1199 § 80.5. The section restated former Probate Code Section 1142.3 (repealed by 1988 Cal. Stat. ch. 1199 § 57.5) without substantive change. Section 7623 was amended by 1990 Cal. Stat. [AB 831] to substitute a reference to the chapter that replaced repealed Sections 901 and 902 and to make other nonsubstantive, clarifying revisions. See also *Recommendations Relating to Probate Law: Hiring and Paying Attorneys, Advisors, and Others; Compensation of Personal Representative*, 20 Cal. L. Revision Comm'n Reports 31 (1990), and *Communication from the California Law Revision Commission Concerning Assembly Bill 831*, 20 Cal. L. Revision Comm'n Reports ___ (1990). For background on the provisions of this chapter, see the Comment to this chapter under the chapter heading.

§ 7624. Money remaining after final distribution of estate

Comment. Section 7624 continues Section 7624 of the repealed Probate Code without change.

Background on Section 7624 of Repealed Code

Section 7624 was added by 1988 Cal. Stat. ch. 1199 § 80.5. The section restated former Probate Code Section 1154 (repealed by 1988 Cal. Stat. ch. 1199 § 57.5), referring to the general provisions for deposit of funds in the county treasury instead of to "unclaimed" property and allowing 60 instead of 10 days for payment to be made. For background on the provisions of this chapter, see the Comment to this chapter under the chapter heading.

Article 3. Deposit of Money of Estate

§ 7640. Deposit with financial institution or county treasurer

Comment. Section 7640 continues Section 7640 of the repealed Probate Code without change.

Background on Section 7640 of Repealed Code

Section 7640 was added by 1988 Cal. Stat. ch. 1199 § 80.5. The section restated the first sentence of former Probate Code Section 1147 (repealed by 1988 Cal. Stat. ch. 1199 § 57.5) without substantive change. For background on the provisions of this chapter, see the Comment to this chapter under the chapter heading.

§ 7641. Withdrawals

Comment. Section 7641 continues Section 7641 of the repealed Probate Code without change.

Background on Section 7641 of Repealed Code

Section 7641 was added by 1988 Cal. Stat. ch. 1199 § 80.5. The section restated the second sentence of former Probate Code Section 1147 (repealed by 1988 Cal. Stat. ch. 1199 § 57.5) without substantive change. For background on the provisions of this chapter, see the Comment to this chapter under the chapter heading.

§ 7642. Interest or dividends

Comment. Section 7642 continues Section 7642 of the repealed Probate Code without change.

Background on Section 7642 of Repealed Code

Section 7642 was added by 1988 Cal. Stat. ch. 1199 § 80.5. The section restated the second paragraph of former Probate Code Section 1147 (repealed by 1988 Cal. Stat. ch. 1199 § 57.5) without substantive change. For background on the provisions of this chapter, see the Comment to this chapter under the chapter heading.

§ 7643. County treasurer's duties with reference to deposit

Comment. Section 7643 continues Section 7643 of the repealed Probate Code without change.

Background on Section 7643 of Repealed Code

Section 7643 was added by 1988 Cal. Stat. ch. 1199 § 80.5. The section restated former Probate Code Section 1148 (repealed by 1988 Cal. Stat. ch. 1199 § 57.5) without substantive change. For background on the provisions of this chapter, see the Comment to this chapter under the chapter heading.

§ 7644. Abandoned deposit in financial institution

Comment. Section 7644 continues Section 7644 of the repealed Probate Code without change. For general provisions, see Sections 1000-1004 (rules of practice), 1020-1023 (petitions and other papers), 1040-1050 (hearings and orders). For general provisions relating to notice of hearing, see Sections 1200-1221. See also Sections 1250-1252 (request for special notice), 1260-1265 (proof of giving notice).

Background on Section 7644 of Repealed Code

Section 7644 was added by 1988 Cal. Stat. ch. 1199 § 80.5. The section restated former Probate Code Section 1147.5 (repealed by 1988 Cal. Stat. ch. 1199 § 57.5) without substantive change. For background on the provisions of this chapter, see the Comment to this chapter under the chapter heading.

Article 4. Summary Disposition of Small Estates

§ 7660. Estates subject to summary disposition

Comment. Section 7660 continues Section 7660 of the repealed Probate Code without substantive change. Petitions under other provisions of this code include petitions for interpretation of a will or determination of persons entitled to distribution. See, e.g., Sections 9611 (petition for instructions), 11700-11705 (determination of persons entitled to distribution). For general provisions, see Sections 1000-1004 (rules of practice), 1020-1023 (petitions and other papers), 1040-1050 (hearings and orders).

Background on Section 7660 of Repealed Code

Section 7660 was added by 1988 Cal. Stat. ch. 1199 § 80.5. Subdivisions (a) and (b) superseded portions of subdivisions (a) and (b) of former Probate Code Section 1143 (repealed by 1988 Cal. Stat. ch. 1199 § 57.5). Subdivision (c) restated subdivision (d) of former Probate Code Section 1143 (repealed by 1988 Cal. Stat. ch. 1199 § 57.5). For background on the provisions of this chapter, see the Comment to this chapter under the chapter heading.

§ 7661. Collection and sale of property

Comment. Section 7661 continues Section 7661 of the repealed Probate Code without change.

Background on Section 7661 of Repealed Code

Section 7661 was added by 1988 Cal. Stat. ch. 1199 § 80.5. The section restated portions of former Probate Code Sections 1143 and 1144 (provisions repealed by 1988 Cal. Stat. ch. 1199 § 57.5), expanding the ability to withdraw funds to include other financial institutions besides banks. For background on the provisions of this chapter, see the Comment to this chapter under the chapter heading.

§ 7662. Priority for payments from estate

Comment. Section 7662 continues Section 7662 of the repealed Probate Code without change. This section does not apply in any proceeding for administration of a decedent's estate commenced before January 1, 1991. See Section 900. As to the law applicable to proceedings commenced before January 1, 1991, see Section 900. As to the application of any amendments made after that date, see Section 3.

Tax and other claims of public entities are entitled to priority under Section 11420. Because no notice to creditors is given pursuant to this article, the time for making claims is extended to the time of distribution of the decedent's property, and recipients of the property remain liable for creditor claims. See Section 7664 (liability for decedent's unsecured debts). Distribution may not be made until at least four months after commencement of administration. See Section 7663 (distribution of property).

Background on Section 7662 of Repealed Code

Section 7662 was added by 1988 Cal. Stat. ch. 1199 § 80.5. The section restated the second sentence of subdivision (a) of former Probate Code Section 1143 and a portion of subdivision (b) of former Probate Code Section 1143 (provisions repealed by 1988 Cal. Stat. ch. 1199 § 57.5), with the addition of specific references to fees and costs of administration. Section 7662 was amended by 1990 Cal. Stat. [AB 831] to incorporate the order of payment prescribed by Section 11420. See also *Recommendations Relating to Probate Law: Hiring and Paying Attorneys, Advisors, and Others; Compensation of Personal Representative*, 20 Cal. L. Revision Comm'n Reports 31 (1990) and *Communication from the California Law Revision Commission Concerning Assembly Bill 831*, 20 Cal. L. Revision Comm'n Reports ___ (1990). For background on the provisions of this chapter, see the Comment to this chapter under the chapter heading.

§ 7663. Distribution of property

Comment. Section 7663 continues Section 7663 of the repealed Probate Code without substantive change. The California Veterans' Home is considered a beneficiary for the purpose of application of this section. See Mil. & Vet. Code § 1035.05.

Background on Section 7663 of Repealed Code

Section 7663 was added by 1988 Cal. Stat. ch. 1199 § 80.5. The section restated a portion of subdivision (b) of former Probate Code Section 1143 and superseded the second sentence of the second paragraph of, and the third paragraph of, former Probate Code Section 1144 (provisions repealed by 1988 Cal. Stat. ch. 1199 § 57.5). Section 7663 made clear that distribution may not be made until at least four months after commencement of administration, and required that all unclaimed summary disposition funds go to the county (as opposed to only those from the smallest estates as was the case under the prior law). For background on the provisions of this chapter, see the Comment to this chapter under the chapter heading.

§ 7664. Liability for decedent's unsecured debts

Comment. Section 7664 continues Section 7664 of the repealed Probate Code without substantive change. This section was drawn from Sections 13109 and 13112 (affidavit procedure for collection or transfer of personal property).

Background on Section 7664 of Repealed Code

Section 7664 was a new provision added by 1988 Cal. Stat. ch. 1199 § 80.5. For background on the provisions of this chapter, see the Comment to this chapter under the chapter heading.

§ 7665. Statement showing property and disposition; receipts and records of expenditures

Comment. Section 7665 continues Section 7665 of the repealed Probate Code without change.

Background on Section 7665 of Repealed Code

Section 7665 was added by 1988 Cal. Stat. ch. 1199 § 80.5. Subdivision (a) of Section 7665 restated the substance of the first sentence of the second paragraph of former Probate Code Section 1144 (repealed by 1988 Cal. Stat. ch. 1199 § 57.5). Receipts and records for expenditures are preserved in the public administrator's files for three years pursuant to subdivision (b). For background on the provisions of this chapter, see the Comment to this chapter under the chapter heading.

§ 7666. Compensation of public administrator

Comment. Section 7666 continues Section 7666 of the repealed Probate Code without change. See 43 Ops. Cal. Att'y Gen. 192 (1964). This section does not apply in any proceeding for administration of a decedent's estate commenced before January 1, 1991. See Section 900. As to the law applicable to proceedings commenced before January 1, 1991, see Section 900. As to the application of any amendments made after that date, see Section 3.

Background on Section 7666 of Repealed Code

Section 7666 was added by 1988 Cal. Stat. ch. 1199 § 80.5. The section superseded subdivision (c) of former Probate Code Section 1143 and the second sentence of former Probate Code Section 1144 (provisions repealed by 1988 Cal. Stat. ch. 1199 § 57.5). Section 7666 was amended by 1990 Cal. Stat. [AB 831] to delete the reference to compensation of the attorney for the personal representative (this matter being

covered by Section 9681), to change "commission" to "compensation", consistent with the terminology used in Part 7 (commencing with Section 10800) (compensation of personal representative), and to substitute a reference to that part which superseded the former provisions for determining compensation of the personal representative. The introductory language of subdivision (a) was also revised to clarify the relationship between this section and Section 7623. See also *Recommendations Relating to Probate Law: Hiring and Paying Attorneys, Advisors, and Others; Compensation of Personal Representative*, 20 Cal. L. Revision Comm'n Reports 31 (1990); *Communication from the California Law Revision Commission Concerning Assembly Bill 831*, 20 Cal. L. Revision Comm'n Reports ___ (1990). For background on the provisions of this chapter, see the Comment to this chapter under the chapter heading.

PART 2. OPENING ESTATE ADMINISTRATION

Comment. This part supersedes Part 2 (commencing with Section 8000) of Division 7 of the repealed Probate Code. The superseded part was enacted upon recommendation of the California Law Revision Commission. See *Recommendation Relating to Opening Estate Administration*, 19 Cal. L. Revision Comm'n Reports 787 (1988). See also *Communication from the California Law Revision Commission Concerning Assembly Bill 2841*, 19 Cal. L. Revision Comm'n Reports 1201, 1231-35 (1988); *Communication from the California Law Revision Commission Concerning Assembly Bill 158*, 20 Cal. L. Revision Comm'n Reports 235, 236 (1990).

CHAPTER 1. COMMENCEMENT OF PROCEEDINGS

§ 8000. Petition

Comment. Section 8000 continues Section 8000 of the repealed Probate Code without change. The court having jurisdiction is the superior court of the proper county. See Sections 7050 (jurisdiction in superior court), 7051-7052 (venue), 7070-7072 (transfer of proceedings).

Background on Section 8000 of Repealed Code

Section 8000 was added by 1988 Cal. Stat. ch. 1199 § 81.5. The section restated former law without substantive change. See, e.g., former Probate Code Section 323 (petition for probate of will) (repealed by 1988 Cal. Stat. ch. 1199 § 40). For background on the provisions of this part, see the Comment to this part under the part heading.

§ 8001. Failure of person named executor to petition

Comment. Section 8001 continues Section 8001 of the repealed Probate Code without change. It is within the discretion of the court whether to hold the person named as executor to have waived the right to appointment. If the court so holds, the court may appoint another competent person as personal representative. See Section 8440 (administrators with the will annexed).

Background on Section 8001 of Repealed Code

Section 8001 was added by 1988 Cal. Stat. ch. 1199 § 81.5. The section restated former Probate Code Section 324 (repealed by 1988 Cal. Stat. ch. 1199 § 40) without substantive change. For background on the provisions of this part, see the Comment to this part under the part heading.

§ 8002. Contents of petition

Comment. Section 8002 continues Section 8002 of the repealed Probate Code without substantive change. For general provisions relating to petitions, see Sections 1020-1023.

Background on Section 8002 of Repealed Code

Section 8002 was added by 1988 Cal. Stat. ch. 1199 § 81.5. The section superseded portions of former Probate Code Sections 326 (petition for probate of will) (repealed by 1988 Cal. Stat. ch. 1199 § 40), 332 (admission of will to probate) (repealed by 1988 Cal. Stat. ch. 1199 § 40), and 440 (petition for letters of administration) (repealed by 1988 Cal. Stat. ch. 1199 § 45). It substituted the "address" for the "residences" of heirs and devisees, added an express requirement that a copy of the will be attached, required that a typed copy of a holographic or handwritten will be attached to the petition, and provided for notice to heirs and devisees reasonably ascertainable by the petitioner. For background on the provisions of this part, see the Comment to this part under the part heading.

§ 8003. Setting and notice of hearing

Comment. Section 8003 continues Section 8003 of the repealed Probate Code with the addition of the last sentence of subdivision (a). The added sentence continues without substantive change a portion of subdivision (b) of Section 1203 of the repealed Probate Code.

Background on Section 8003 of Repealed Code

Section 8003 was added by 1988 Cal. Stat. ch. 1199 § 81.5. The section restated former Probate Code Section 327 (probate of will) (repealed by 1988 Cal. Stat. ch. 1199 § 40) and a portion of former Probate Code Section 441 (application for letters) (repealed by 1988 Cal. Stat. ch. 1199 § 45), except that the petitioner rather than the clerk has the duty of giving notice. For background on the provisions of this part, see the Comment to this part under the part heading.

§ 8004. Opposition

Comment. Section 8004 continues Section 8004 of the repealed Probate Code without change. See also Sections 1043 (response or objection), 1045 (continuance or postponement).

Background on Section 8004 of Repealed Code

Section 8004 was added by 1988 Cal. Stat. ch. 1199 § 81.5. Subdivision (a) restated portions of former Probate Code Sections 370 (repealed by 1988 Cal. Stat. ch. 1199 § 42), 407 (repealed by 1988 Cal. Stat. ch. 1199 § 43), and 442 (repealed by 1988 Cal. Stat. ch. 1199 § 45) without substantive change. Subdivision (b) was a new provision. For background on the provisions of this part, see the Comment to this part under the part heading.

§ 8005. Hearing; examination and compelling attendance of witnesses; matters to be established

Comment. Section 8005 continues Section 8005 of the repealed Probate Code without change. For general provisions, see Sections 1040-1048(hearings and orders), 1260-1265 (proof of giving notice).

Background on Section 8005 of Repealed Code

Section 8005 was added by 1988 Cal. Stat. ch. 1199 § 81.5. The section restated former Probate Code Section 443 (repealed by 1988 Cal. Stat. ch. 1199 § 45) and a portion of the first sentence of former Probate Code Section 407 (repealed by 1988 Cal. Stat. ch. 1199 § 43), with the addition of the references to notice. For background on the provisions of this part, see the Comment to this part under the part heading.

§ 8006. Court order

Comment. Section 8006 continues Section 8006 of the repealed Probate Code without change. For the minute order admitting a will to probate, see Section 8225.

Background on Section 8006 of Repealed Code

Section 8006 was added by 1988 Cal. Stat. ch. 1199 § 81.5. Subdivision (a) was a new provision. Subdivision (b) restated the last paragraph of former Probate Code Sections 326 (repealed by 1988 Cal. Stat. ch. 1199 § 40) and 440 (repealed by 1988 Cal. Stat. ch. 1199 § 45) without substantive change. For background on the provisions of this part, see the Comment to this part under the part heading.

§ 8007. Determination of jurisdiction conclusive

Comment. Section 8007 continues Section 8007 of the repealed Probate Code without change, except that subdivision (b)(1) is revised to make clear that the fraud referred to is extrinsic fraud. This is consistent with case law. See Estate of Robinson, 19 Cal. 2d 534, 121 P.2d 734 (1942); Estate of Crisler, 83 Cal. App. 2d 431, 188 P.2d 772 (1948).

Background on Section 8007 of Repealed Code

Section 8007 was added by 1988 Cal. Stat. ch. 1199 § 81.5. The section restated former Probate Code Section 302 (repealed by 1988 Cal. Stat. ch. 1199 § 40) without substantive change and extended it to cover probate of a will as well as appointment of a personal representative. This had the effect of codifying the rule in Estate of Sanders, 40 Cal. 3d 607, 710 P.2d 232, 221 Cal. Rptr. 432 (1985). For background on the provisions of this part, see the Comment to this part under the part heading.

CHAPTER 2. NOTICE OF HEARING

Article 1. Contents

§ 8100. Form of notice of hearing

Comment. Section 8100 continues Section 8100 of the repealed Probate Code without change.

Background on Section 8100 of Repealed Code

Section 8100 was added by 1988 Cal. Stat. ch. 1199 § 81.5. The section restated the second sentence of former Probate Code Section 328 and subdivision (b) of former Probate Code Section 333 and continued the substance of subdivision (e) of former

Section 333 (provisions repealed by 1988 Cal. Stat. ch. 1199 § 40), except that reference to notice of the decedent's death was eliminated from the caption, the type size was not specified (but see Section 8123 concerning type size), and a reference to the decedent's will was added. Section 8100 also restated the last sentence of former Probate Code Section 441 (repealed by 1988 Cal. Stat. ch. 1199 § 45) without substantive change and incorporated the substance of subdivision (c) of Probate Code Section 10451. Section 8100 consolidated the published notice with the general notice served on heirs or beneficiaries, so that there is a single form of notice. For background on the provisions of this part, see the Comment to this part under the part heading.

Article 2. Service of Notice of Hearing

§ 8110. Time for service; manner; persons to be served

Comment. Section 8110 continues Section 8110 of the repealed Probate Code without change. For general provisions relating to notice, see Sections 1200-1221. See also Sections 1260-1265 (proof of giving of notice). Cf. Section 9050 (notice to creditors).

Background on Section 8110 of Repealed Code

Section 8110 was added by 1988 Cal. Stat. ch. 1199 § 81.5. The section restated the first part of the first sentence of former Probate Code Section 328 (repealed by 1988 Cal. Stat. ch. 1199 § 40) and a portion of the second sentence of former Probate Code Section 441 (repealed by 1988 Cal. Stat. ch. 1199 § 45), but limits service on heirs to known heirs. For background on the provisions of this part, see the Comment to this part under the part heading.

§ 8111. Service on Attorney General

Comment. Section 8111 continues Section 8111 of the repealed Probate Code without substantive change.

Background on Section 8111 of Repealed Code

Section 8111 was added by 1988 Cal. Stat. ch. 1199 § 81.5. The section restated the second paragraph of former Probate Code Section 328 (repealed by 1988 Cal. Stat. ch. 1199 § 40) without substantive change. For background on the provisions of this part, see the Comment to this part under the part heading.

§ 8112. Notice to creditors and public entity claimants

Comment. Section 8112 continues Section 8112 of the repealed Probate Code without change.

Background on Section 8112 of Repealed Code

Section 8112 was a new provision added by 1988 Cal. Stat. ch. 1199 § 81.5. For background on the provisions of this part, see the Comment to this part under the part heading.

§ 8113. Notice involving foreign citizen

Comment. Section 8113 continues Section 8113 of the repealed Probate Code without change. This section applies only if there is a recognized diplomatic or consular official of the particular foreign country maintaining an office in the United States. Whether a country

has recognized diplomatic or consular representation in the United States may be ascertained from the United States Department of State.

Background on Section 8113 of Repealed Code

Section 8113 was a new provision added by 1988 Cal. Stat. ch. 1199 § 81.5. The section was drawn from Section 7.06 of the Los Angeles County Probate Policy Memorandum in California Local Probate Rules (10th ed. Cal. Cont. Ed. Bar 1989). For background on the provisions of this part, see the Comment to this part under the part heading.

Article 3. Publication

§ 8120. Publication required

Comment. Section 8120 continues Section 8120 of the repealed Probate Code without change.

Background on Section 8120 of Repealed Code

Section 8120 was a new provision added by 1988 Cal. Stat. ch. 1199 § 81.5. For background on the provisions of this part, see the Comment to this part under the part heading.

§ 8121. Time and manner of publication

Comment. Section 8121 continues Section 8121 of the repealed Probate Code without substantive change.

Background on Section 8121 of Repealed Code

Section 8121 was added by 1988 Cal. Stat. ch. 1199 § 81.5. The section restated subdivision (a) of former Probate Code Section 333 (repealed by 1988 Cal. Stat. ch. 1199 § 40) but omitted the posting provision, which was no longer necessary. The reference to the first publication date clarified the former provision that publication of notice "pursuant to this section shall be for at least 15 days." The former reference to the "community" where the decedent resided was replaced by a reference to the "area of the county," since some decedents do not reside in communities. For background on the provisions of this part, see the Comment to this part under the part heading.

§ 8122. Good faith compliance with publication requirement

Comment. Section 8122 continues Section 8122 of the repealed Probate Code without change.

Background on Section 8122 of Repealed Code

Section 8122 was added by 1988 Cal. Stat. ch. 1199 § 81.5. The section restated former Probate Code Section 334 (repealed by 1988 Cal. Stat. ch. 1199 § 40) without substantive change. For background on the provisions of this part, see the Comment to this part under the part heading.

§ 8123. Type size

Comment. Section 8123 continues Section 8123 of the repealed Probate Code without change. See also Code Civ. Proc. § 1019 (type size variations).

Background on Section 8123 of Repealed Code

Section 8123 was added by 1988 Cal. Stat. ch. 1199 § 81.5. The section restated the introductory portion of subdivision (b) of former Probate Code Section 333 (repealed

by 1988 Cal. Stat. ch. 1199 § 40) without substantive change. For background on the provisions of this part, see the Comment to this part under the part heading.

§ 8124. Affidavit of publication

Comment. Section 8124 continues Section 8124 of the repealed Probate Code without change. See also Sections 1260-1265 (proof of giving of notice).

Background on Section 8124 of Repealed Code

Section 8124 was added by 1988 Cal. Stat. ch. 1199 § 81.5. The section restated subdivision (c) of former Probate Code Section 333 (repealed by 1988 Cal. Stat. ch. 1199 § 40) without substantive change. For background on the provisions of this part, see the Comment to this part under the part heading.

§ 8125. Contents of subsequent published notice

Comment. Section 8125 continues Section 8125 of the repealed Probate Code without change.

Background on Section 8125 of Repealed Code

Section 8125 was added by 1988 Cal. Stat. ch. 1199 § 81.5. The section restated subdivision (d) of former Probate Code Section 333 (repealed by 1988 Cal. Stat. ch. 1199 § 40) without substantive change. For background on the provisions of this part, see the Comment to this part under the part heading.

CHAPTER 3. PROBATE OF WILL

Article 1. Production of Will

§ 8200. Delivery of will

Comment. Section 8200 continues Section 8200 of the repealed Probate Code without change.

Background on Section 8200 of Repealed Code

Section 8200 was added by 1988 Cal. Stat. ch. 1199 § 81.5. The section superseded former Probate Code Section 320 (repealed by 1988 Cal. Stat. ch. 1199 § 40). Section 8200 required delivery of the original will in all cases, precluded charging a filing fee, and added a procedure for production of the delivered will. For background on the provisions of this part, see the Comment to this part under the part heading.

§ 8201. Order to produce will

Comment. Section 8201 continues Section 8201 of the repealed Probate Code without change. The court or judge has general authority to enforce the production of wills and the attendance of witnesses. See Section 7050 (authority of court or judge).

Background on Section 8201 of Repealed Code

Section 8201 was added by 1988 Cal. Stat. ch. 1199 § 81.5. The section restated a portion of former Probate Code Section 321 (repealed by 1988 Cal. Stat. ch. 1199 § 40). For background on the provisions of this part, see the Comment to this part under the part heading.

§ 8202. Will detained outside California

Comment. Section 8202 continues Section 8202 of the repealed Probate Code without change. Proof of a certified copy may be made in the same manner as proof of an original will. Thus the court may authorize a copy to be presented to the witnesses and the witnesses may be asked the same questions with respect to the copy as if the original will were present. See Article 2 (commencing with Section 8220) (proof of will). Proof may also be made by an affidavit in the will that incorporates an attestation clause. Section 8220(b) (evidence of subscribing witness).

Background on Section 8202 of Repealed Code

Section 8202 was added by 1988 Cal. Stat. ch. 1199 § 81.5. The section restated former Probate Code Section 330 (repealed by 1988 Cal. Stat. ch. 1199 § 40) with clarifications that domicile, rather than residence, is the determining factor and that a certified, rather than authenticated, copy of the will is necessary. For background on the provisions of this part, see the Comment to this part under the part heading.

Article 2. Proof of Will

§ 8220. Evidence of subscribing witness

Comment. Section 8220 continues Section 8220 of the repealed Probate Code without change. See also Section 6221.5 (California Statutory Will).

Background on Section 8220 of Repealed Code

Section 8220 was added by 1988 Cal. Stat. ch. 1199 § 81.5. The section restated the first two sentences of former Probate Code Section 329 (repealed by 1988 Cal. Stat. ch. 1199 § 40) and the last sentence of former Probate Code Section 1283 (enacted by 1987 Cal. Stat. ch. 923 § 60.5 and repealed by 1988 Cal. Stat. ch. 1199 § 64.5) without substantive change. Former Section 1283 continued former Probate Code Section 1233 (repealed by 1987 Cal. Stat. ch. 923 § 59) without change. For background on the provisions of this part, see the Comment to this part under the part heading.

§ 8221. Proof where no subscribing witness available

Comment. Section 8221 continues Section 8221 of the repealed Probate Code without change. If the subscribing witnesses are competent at the time of attesting the execution, their subsequent incompetency, from whatever cause, will not prevent the probate of the will if it is otherwise satisfactorily proved. Cf. Evid. Code § 240 ("unavailable as a witness").

Background on Section 8221 of Repealed Code

Section 8221 was added by 1988 Cal. Stat. ch. 1199 § 81.5. The section restated the fourth sentence of former Probate Code Section 329 (repealed by 1988 Cal. Stat. ch. 1199 § 40), except that the writing need not appear "at the end" of the will. The signatures of subscribing witnesses no longer must appear at the end. See Section 6110 (execution) and Comment thereto. For background on the provisions of this part, see the Comment to this part under the part heading.

§ 8222. Holographic will

Comment. Section 8222 continues Section 8222 of the repealed Probate Code without change. See Evid. Code §§ 1400-1454 (authentication and proof of writings). See also Section 6111 (requirements for valid holographic will).

Background on Section 8222 of Repealed Code

Section 8222 was added by 1988 Cal. Stat. ch. 1199 § 81.5. The section restated former Probate Code Section 331 (repealed by 1988 Cal. Stat. ch. 1199 § 40) without substantive change. For background on the provisions of this part, see the Comment to this part under the part heading.

§ 8223. Lost or destroyed will

Comment. Section 8223 continues Section 8223 of the repealed Probate Code without change. See also Section 6124 (presumption that will that cannot be found after the testator's death was destroyed with intent to revoke it).

Background on Section 8223 of Repealed Code

Section 8223 was added by 1988 Cal. Stat. ch. 1199 § 81.5. The section restated the first two sentences of former Probate Code Section 351 (repealed by 1988 Cal. Stat. ch. 1199 § 40), except that the requirement that the order admitting the will to probate be "entered at length in the minutes" was omitted. For background on the provisions of this part, see the Comment to this part under the part heading.

§ 8224. Preserving testimony; admissibility in subsequent proceeding

Comment. Section 8224 continues Section 8224 of the repealed Probate Code without change. See also Section 8220 (evidence of subscribing witness).

Background on Section 8224 of Repealed Code

Section 8224 was added by 1988 Cal. Stat. ch. 1199 § 81.5. The section restated and broadened former Probate Code Section 374 (will contests) (repealed by 1988 Cal. Stat. ch. 1199 § 42) and the last sentence of former Probate Code Section 351 (proof of lost or destroyed will) (repealed by 1988 Cal. Stat. ch. 1199 § 40). The former provisions were treated as permissive rather than mandatory in practice and by case law. For background on the provisions of this part, see the Comment to this part under the part heading.

§ 8225. Admission of will to probate

Comment. Section 8225 continues Section 8225 of the repealed Probate Code without change. See also Section 8002(b) (contents of petition).

Background on Section 8225 of Repealed Code

Section 8225 was added by 1988 Cal. Stat. ch. 1199 § 81.5. The section superseded the first sentence of former Probate Code Section 332 (repealed by 1988 Cal. Stat. ch. 1199 § 40). For background on the provisions of this part, see the Comment to this part under the part heading.

§ 8226. Effect of admission of will to probate

Comment. Section 8226 continues Section 8226 of the repealed Probate Code without change. The conclusive effect under subdivision (a) of admission of a will to probate does not apply in case of extrinsic fraud or other jurisdictional defects. See Section 8007. See also, e.g., Estate of Sanders, 40 Cal. 3d 607, 710 P.2d 232, 221 Cal. Rptr. 432 (1985) (extrinsic fraud). The time within which a contest must be made is before or at the hearing (Section 1043), and the time within which revocation of probate may be sought is 120 days after the will is admitted or, in the case of a minor or incompetent person, before the close of estate administration (Section 8270).

Subdivision (b) is consistent with Estate of Moore, 180 Cal. 570, 182 P. 285 (1919) (admission of will does not preclude probate of another will). If more than one will is admitted to probate, the court should resolve any conflicts in provisions, including what provisions control nomination of an executor. Admission of a will to probate may not affect property previously distributed, but the court may order adjustments of gifts in light of a will later admitted to probate. The court may not, however, rescind a distribution once made as a result of a later discovery of a will.

One effect of subdivision (b) is to preclude probate of a will after close of administration as a general rule. In the case of after-discovered property, however, a later will would be admissible under subdivision (b) to govern distribution of the after-discovered property, notwithstanding Section 11642 (after-acquired or after-discovered property).

Background on Section 8226 of Repealed Code

Section 8226 was added by 1988 Cal. Stat. ch. 1199 § 81.5. Subdivision (a) restated the first portion of former Probate Code Section 384 (repealed by 1988 Cal. Stat. ch. 1199 § 42) without substantive change. Subdivision (b) superseded former Probate Code Section 385 (repealed by 1988 Cal. Stat. ch. 1199 § 42). For background on the provisions of this part, see the Comment to this part under the part heading.

Article 3. Contest of Will

§ 8250. Summons; persons to be served; time for responsive pleading; executor's duty to defend will

Comment. Section 8250 continues Section 8250 of the repealed Probate Code without substantive change. Subdivision (a) is revised to make clear that a will contest is initiated by filing an objection to probate of the will. Service of the summons must be made in the manner provided by law for service of summons in a civil action. Section 1000 (general rules of practice). Section 8250 does not limit the persons to be notified, and thus requires notice to all affected persons wherever

residing, including minors and incompetents. Failure of a person to respond precludes the person from further participating in the contest but does not otherwise affect the person's interest. Section 8251 (responsive pleading).

Background on Section 8250 of Repealed Code

Section 8250 was added by 1988 Cal. Stat. ch. 1199 § 81.5. The section restated the last portion of the first sentence of former Probate Code Section 370 (repealed by 1988 Cal. Stat. ch. 1199 § 42), but replaced the citation with a summons. For background on the provisions of this part, see the Comment to this part under the part heading.

§ 8251. Responsive pleading

Comment. Section 8251 continues Section 8251 of the repealed Probate Code without substantive change. Subdivision (c)(2) is revised to make clear that failure to respond by the petitioner for probate of a will does not preclude the petitioner from further participation. Relief from a failure timely to respond or from a judgment in the will contest may be available under Code of Civil Procedure Section 473. See Section 1000 (general rules of practice).

Background on Section 8251 of Repealed Code

Section 8251 was added by 1988 Cal. Stat. ch. 1199 § 81.5. Subdivisions (a) and (b) restated the second, third, and fourth sentences of former Probate Code Section 370 (repealed by 1988 Cal. Stat. ch. 1199 § 42), but did not make receipt of written notice a condition for time to answer after a demurrer is overruled. Subdivision (c) was a new provision. For background on the provisions of this part, see the Comment to this part under the part heading.

§ 8252. Trial

Comment. Section 8252 continues Section 8252 of the repealed Probate Code without change. Subdivision (a) is drawn from Uniform Probate Code Section 3-407 (1987). As to the construction of provisions drawn from uniform acts, see Section 2. Nothing in subdivision (a) precludes consolidation for trial of two wills offered for probate. Subdivision (b) eliminates jury trial in will contests. See also Section 7200 (right to trial by jury).

Background on Section 8252 of Repealed Code

Section 8252 was added by 1988 Cal. Stat. ch. 1199 § 81.5. The section superseded former Probate Code Section 371 (repealed by 1988 Cal. Stat. ch. 1199 § 42). Section 8252 eliminated the jury trial in will contests. A jury trial is not constitutionally required. Under former law, there was a high percentage of reversals on appeal of jury verdicts, with the net result that the whole jury and appeal process served mainly to postpone enjoyment of the estate, enabling contestants as a practical matter to force compromise settlements to which they would not otherwise be entitled. See *Recommendation Relating to Opening Estate Administration*, 19 Cal. L. Revision Comm'n Reports 787, 793-94 (1988). For background on the provisions of this part, see the Comment to this part under the part heading.

§ 8253. Evidence of execution

Comment. Section 8253 continues Section 8253 of the repealed Probate Code without change. The court may admit proof of the handwriting of the testator and of any of the subscribing witnesses as evidence of the due execution of the will where no witness is available. See Section 8221 (proof where no subscribing witness available).

Background on Section 8253 of Repealed Code

Section 8253 was added by 1988 Cal. Stat. ch. 1199 § 81.5. The section restated former Probate Code Section 372 (repealed by 1988 Cal. Stat. ch. 1199 § 42) but did not continue the former limitation on production of witnesses outside the county. See Section 1000 (general rules of practice); Code Civ. Proc. § 1989 (compelling attendance of witnesses). For background on the provisions of this part, see the Comment to this part under the part heading.

§ 8254. Judgment

Comment. Section 8254 continues Section 8254 of the repealed Probate Code without change.

Background on Section 8254 of Repealed Code

Section 8254 was added by 1988 Cal. Stat. ch. 1199 § 81.5. The section superseded former Probate Code Section 373 (repealed by 1988 Cal. Stat. ch. 1199 § 42). For background on the provisions of this part, see the Comment to this part under the part heading.

Article 4. Revocation of Probate

§ 8270. Time to petition for revocation; eligible petitioners; contents of petition

Comment. Section 8270 continues Section 8270 of the repealed Probate Code without change. A will is admitted to probate when it is recorded in the minutes by the clerk. Section 8225 (admission of will to probate).

Background on Section 8270 of Repealed Code

Section 8270 was added by 1988 Cal. Stat. ch. 1199 § 81.5. Subdivision (a) restated former Probate Code Section 380 (repealed by 1988 Cal. Stat. ch. 1199 § 42) but omitted reference to some of the specific grounds of opposition. Subdivision (b) superseded the last portion of former Probate Code Section 384 (repealed by 1988 Cal. Stat. ch. 1199 § 42). Subdivision (b) limited the previously indefinite right of minors and incompetents to petition for revocation. For background on the provisions of this part, see the Comment to this part under the part heading.

§ 8271. Summons; service; time for responsive pleading; failure timely to respond

Comment. Section 8271 continues Section 8271 of the repealed Probate Code without change. The summons must be directed to the devisees mentioned in the will as to which revocation of probate is sought, as well as to heirs and any personal representative appointed by the court. The summons may be directed to minors or incompetent

persons, or to the personal representative of a deceased person. For the burden of proof on proponents and contestants of the will, see Section 8252 (trial). Relief from a failure timely to respond or from a judgment in the will contest may be available under Code of Civil Procedure Section 473. See Section 1000 (general rules of practice).

Background on Section 8271 of Repealed Code

Section 8271 was added by 1988 Cal. Stat. ch. 1199 § 81.5. Subdivision (a) superseded former Probate Code Section 381 (repealed by 1988 Cal. Stat. ch. 1199 § 42), substituting a summons for the citation. The former requirement that the summons be issued within the time allowed for filing the petition was not continued. Subdivision (b) restated the first sentence of former Section 382 (repealed by 1988 Cal. Stat. ch. 1199 § 42), except that the provision for a jury trial was not continued. See Section 7200 (trial by jury). Subdivision (c) was a new provision. For background on the provisions of this part, see the Comment to this part under the part heading.

§ 8272. Revocation; effect of revocation

Comment. Section 8272 continues Section 8272 of the repealed Probate Code without change. Subdivision (b) is consistent with Section 8406 (reversal of order appointing personal representative).

Background on Section 8272 of Repealed Code

Section 8272 was added by 1988 Cal. Stat. ch. 1199 § 81.5. The section restated the second, third, and fourth sentences of former Probate Code Section 382 (repealed by 1988 Cal. Stat. ch. 1199 § 42), except that the references to jury trial and invalidity of the will were not continued. See Section 7200 (trial by jury). Section 8272 also added protection for bona fide purchasers and encumbrancers for value. For background on the provisions of this part, see the Comment to this part under the part heading.

CHAPTER 4. APPOINTMENT OF PERSONAL REPRESENTATIVE

Article 1. General Provisions

§ 8400. Appointment necessary

Comment. Section 8400 continues Section 8400 of the repealed Probate Code without change. Letters may not be issued until the person appointed takes the oath of office and gives any required bond. See Section 8403 (oath) and Article 5 (commencing with Section 8480) (bond). It should be noted that a petitioner for appointment as personal representative may deliver or deposit property of the decedent in the petitioner's possession in a controlled account. See Section 8401. A person named executor in the will is under no duty to defend a contest of the will until appointment as executor. See Section 8250 (summons). See also Sections 300-301 (trust company as personal representative), 9605 (appointment does not discharge any claim the decedent has against personal representative).

Background on Section 8400 of Repealed Code

Section 8400 was added by 1988 Cal. Stat. ch. 1199 § 81.5. The section restated former Probate Code Section 400 (repealed by 1988 Cal. Stat. ch. 1199 § 43) without substantive change. For background on the provisions of this part, see the Comment to this part under the part heading.

§ 8401. Deposit of money or other property subject to withdrawal by court order only

Comment. Section 8401 continues Section 8401 of the repealed Probate Code without change. See also Section 8483 (reduction of bond by deposit of assets).

Background on Section 8401 of Repealed Code

Section 8401 was added by 1988 Cal. Stat. ch. 1199 § 81.5. The section restated subdivision (b) of former Probate Code Section 541.1 (repealed by 1988 Cal. Stat. ch. 1199 § 48) and extended the coverage of the section to include "personal property" in addition to "money" and "securities." Section 8401 was amended by 1989 Cal. Stat. ch. 544 § 6 to refer to the procedures in Sections 9700-9705 for depositing money in an insured account in a financial institution and depositing personal property with a trust company. This continued a provision of former Section 541.1(b). For background on the provisions of this part, see the Comment to this part under the part heading.

§ 8402. Persons ineligible for appointment

Comment. Section 8402 continues Section 8402 of the repealed Probate Code without change. Paragraph (3) of subdivision (a) enables the court to deny appointment of a personal representative if the personal representative would be subject to removal, for example, for a conflict of interest that is sufficient to require removal. This would reverse the result in cases such as Estate of Backer, 164 Cal. App. 3d 1159, 211 Cal. Rptr. 163 (1985). For contest of appointment, see Section 8004.

Background on Section 8402 of Repealed Code

Section 8402 was added by 1988 Cal. Stat. ch. 1199 § 81.5. Paragraph (a)(1) restated a provision of former Probate Code Section 401 (repealed by 1988 Cal. Stat. ch. 1199 § 43) without substantive change. Paragraph (a)(2) superseded the remainder of former Section 401. Paragraph (a)(3) was a new provision. Paragraph (a)(4) and subdivision (b) restated former Probate Code Section 420 (repealed by 1988 Cal. Stat. ch. 1199 § 45) without substantive change. Paragraph (a)(5) and subdivision (b) restated former Probate Code Section 421 (repealed by 1988 Cal. Stat. ch. 1199 § 45) without substantive change. For background on the provisions of this part, see the Comment to this part under the part heading.

§ 8403. Oath

Comment. Section 8403 continues Section 8403 of the repealed Probate Code without change. The requirement of an oath may be satisfied by a written affirmation. See Code Civ. Proc. § 2015.6. See also Adams v. Sharp, 61 Cal. 2d 775, 394 P.2d 943, 40 Cal. Rptr. 255 (1964) (oath taken out of state).

Background on Section 8403 of Repealed Code

Section 8403 was added by 1988 Cal. Stat. ch. 1199 § 81.5. The section restated former Probate Code Section 540 (repealed by 1988 Cal. Stat. ch. 1199 § 48) but permitted the oath to be signed at the time the petition is signed. For background on the provisions of this part, see the Comment to this part under the part heading.

§ 8404. Statement of duties and liabilities

Comment. Section 8404 continues Section 8404 of the repealed Probate Code with the following revisions:

(1) Subdivision (a) has been revised to except the public administrator from the requirement of filing an acknowledgment of receipt of the statement of duties and liabilities.

(2) The language now in subdivision (b) has been revised to eliminate the reference to the form provided in former subdivision (c).

(3) The form stating the personal representative's duties and liabilities in former subdivision (c) has been omitted because the form was superseded by the Judicial Council Form DE 147 (July 1, 1989).

Although the statement of duties and liabilities must be in the form prescribed by the Judicial Council, the attorney for the personal representative may supplement, explain, or otherwise address the subject matter separately, where appropriate.

Background on Section 8404 of Repealed Code

Section 8404 was added by 1988 Cal. Stat. ch. 1199 § 81.5. The section was a new provision drawn from general instructions given to personal representatives by a number of courts. Section 8404 was amended by 1989 Cal. Stat. ch. 21 § 17 to amend item 4 in subdivision (c) to conform with Section 8800. See *Communication from the California Law Revision Commission Concerning Assembly Bill 156*, 20 Cal. L. Revision Comm'n Reports 227, 230 (1990). Section 8404 was also amended by 1990 Cal. Stat. [AB 831] to delete the reference to payment of attorney fees on court order from item 3 and from the last paragraph in the statement of duties and liabilities of a personal representative in subdivision (c), consistent with Section 9681 (compensation determined by agreement), and to conform item 4 with Section 8800 (inventory and appraisal required). For background on the provisions of this part, see the Comment to this part under the part heading. See also *Recommendation Relating to Probate Law: Hiring and Paying Attorneys, Advisors, and Others; Compensation of Personal Representative*, 20 Cal. L. Revision Comm'n Reports 31 (1990).

§ 8405. Form of letters

Comment. Section 8405 continues Section 8405 of the repealed Probate Code with the addition of the requirement in subdivision (c) that the letters include a notation whether the independent administration authority includes or excludes the power to borrow money with the loan secured by an encumbrance upon real property. This is consistent with subdivision (c) of Section 10452 of the repealed Probate Code, which is superseded by subdivision (c) of Section 8405, and with subdivision (b) of Section 10501. The Judicial Council may prescribe the form of letters.

See Section 1001 (Judicial Council and local court rules). See also Section 10454 (new letters to be issued when court orders limits or revokes independent administration authority).

Background on Section 8405 of Repealed Code

Section 8405 was added by 1988 Cal. Stat. ch. 1199 § 81.5. The section superseded former Probate Code Sections 500, 501, and 502 (provisions repealed by 1988 Cal. Stat. ch. 1199 § 47). The section was amended by 1989 Cal. Stat. ch. 21 § 18 to conform with Sections 10403 (limited authority) and 10452 (endorsement on letters) of the repealed Probate Code. See *Communication from the California Law Revision Commission Concerning Assembly Bill 156*, 20 Cal. L. Revision Comm'n Reports 227, 230 (1990). For background on the provisions of this part, see the Comment to this part under the part heading.

§ 8406. Effect of reversal of appointment of personal representative

Comment. Section 8406 continues Section 8406 of the repealed Probate Code without change. This section parallels Section 8272 (revocation of probate). This section does not apply where the appointment of the personal representative is reversed for lack of jurisdiction. See Estate of Schwartz, 87 Cal. App. 2d 569, 573, 197 P.2d 223 (1948).

Background on Section 8406 of Repealed Code

Section 8406 was added by 1988 Cal. Stat. ch. 1199 § 81.5. The section replaced former Probate Code Section 1298 (enacted by 1987 Cal. Stat. ch. 923 § 60.5 and repealed by 1988 Cal. Stat. ch. 1199 § 64.5) and revised the former section by making clear that it was intended to protect third persons. See Estate of Gibson, 233 Cal. App. 2d 125, 130, 43 Cal. Rptr. 302 (1965) (interpreting the predecessor of former Section 1298). The reference in former Section 1298 to the time of qualification of the personal representative was replaced by the reference to the time letters are issued. See Section 8400(a) (appointment of personal representative effective on issuance of letters). Former Section 1298 restated former Probate Code Section 1241 (repealed by 1987 Cal. Stat. ch. 923 § 59) without substantive change. Section 8406 was amended by 1989 Cal. Stat. ch. 544 § 7 for clarity and to conform to Section 8272 (revocation of probate). For background on the provisions of this part, see the Comment to this part under the part heading.

Article 2. Executors

§ 8420. Person named in will as executor

Comment. Section 8420 continues Section 8420 of the repealed Probate Code without change. This section is an express statement of the concept that the named executor has first priority for appointment as personal representative. The section does not apply if the person named is not qualified for appointment under Section 8402 (qualifications) or has waived the right to appointment. See also Section 9605 (appointment does not discharge any claim the decedent has against personal representative).

Background on Section 8420 of Repealed Code

Section 8420 was a new provision added by 1988 Cal. Stat. ch. 1199 § 81.5. Cf. former Probate Code Section 407 (repealed by 1988 Cal. Stat. ch. 1199 § 43). For background on the provisions of this part, see the Comment to this part under the part heading.

§ 8421. Person not named in will but apparently intended by will to be executor

Comment. Section 8421 continues Section 8421 of the repealed Probate Code without change.

Background on Section 8421 of Repealed Code

Section 8421 was added by 1988 Cal. Stat. ch. 1199 § 81.5. The section restated former Probate Code Section 402 (repealed by 1988 Cal. Stat. ch. 1199 § 43) without substantive change. For background on the provisions of this part, see the Comment to this part under the part heading.

§ 8422. Power conferred by will to designate executor

Comment. Section 8422 continues Section 8422 of the repealed Probate Code without change. An executor designated under this section must be appointed by the court. See Section 8400 (appointment necessary).

Background on Section 8422 of Repealed Code

Section 8422 was added by 1988 Cal. Stat. ch. 1199 § 81.5. The section restated former Probate Code Section 403 (repealed by 1988 Cal. Stat. ch. 1199 § 43) without substantive change. For background on the provisions of this part, see the Comment to this part under the part heading.

§ 8423. Successor trust company as executor

Comment. Section 8423 continues Section 8423 of the repealed Probate Code without change. A trust company is an entity that has qualified to engage in and conduct a trust business in this state. A trust company may act as an executor. See Sections 83, 300; Fin. Code § 1580.

Background on Section 8423 of Repealed Code

Section 8423 was added by 1988 Cal. Stat. ch. 1199 § 81.5. The section restated former Probate Code Section 404 (repealed by 1988 Cal. Stat. ch. 1199 § 43) without substantive change. For background on the provisions of this part, see the Comment to this part under the part heading.

§ 8424. Minor named as executor

Comment. Section 8424 continues Section 8424 of the repealed Probate Code without change. The court may exercise its discretion under this section.

Background on Section 8424 of Repealed Code

Section 8424 was added by 1988 Cal. Stat. ch. 1199 § 81.5. The section restated without substantive change the portion of former Probate Code Section 405 (repealed by 1988 Cal. Stat. ch. 1199 § 43) that related to a minor named as executor. For

background on the provisions of this part, see the Comment to this part under the part heading.

§ 8425. Court appointment of fewer than all persons named in will as executors

Comment. Section 8425 continues Section 8425 of the repealed Probate Code without change.

Background on Section 8425 of Repealed Code

Section 8425 was added by 1988 Cal. Stat. ch. 1199 § 81.5. The section restated former Probate Code Section 408 (repealed by 1988 Cal. Stat. ch. 1199 § 43) without substantive change. For background on the provisions of this part, see the Comment to this part under the part heading.

Article 3. Administrators With the Will Annexed

§ 8440. When appointment required

Comment. Section 8440 continues Section 8440 of the repealed Probate Code without change. A person named as an executor may be unwilling or unable to act because the person is dead or incompetent, renounces or fails to petition for appointment, fails to appear and qualify, or dies or is removed from office after appointment and before the completion of administration.

No executor of a deceased executor is, as such, authorized to administer the estate of the first testator. Section 8522 (vacancy where no personal representatives remain). However, the deceased executor may have the power to designate a successor executor. See Section 8422 (power to designate executor). And the executor of the deceased executor may qualify independently for appointment as an administrator with the will annexed under this section. See also Sections 300-301 (trust company as personal representative), 9605 (appointment does not discharge any claim the decedent has against personal representative).

Background on Section 8440 of Repealed Code

Section 8440 was added by 1988 Cal. Stat. ch. 1199 § 81.5. The section superseded former Probate Code Section 406 (repealed by 1988 Cal. Stat. ch. 1199 § 43). For background on the provisions of this part, see the Comment to this part under the part heading.

§ 8441. Priority for appointment

Comment. Section 8441 continues Section 8441 of the repealed Probate Code without change. For priority for appointment of an administrator, see Section 8461. Subdivision (b) gives priority to devisees, who need not be entitled to succeed to all or part of the estate under the law of succession in order to have priority. However, subdivision (b) also gives the court discretion to disregard the priority of a devisee in an appropriate case where another person would take a

substantial statutory intestate or omitted heir share. See also Sections 140-147 (surviving spouse's waiver of rights at death), 9605 (appointment does not discharge claim decedent has against personal representative).

Background on Section 8441 of Repealed Code

Section 8441 was added by 1988 Cal. Stat. ch. 1199 § 81.5. The section superseded the second and third sentences of former Probate Code Section 409 (repealed by 1988 Cal. Stat. ch. 1199 § 43). The express references to nominees were new. For background on the provisions of this part, see the Comment to this part under the part heading.

§ 8442. Authority of administrator with the will annexed

Comment. Section 8442 continues Section 8442 of the repealed Probate Code without change. The acts of the administrator with the will annexed are as effectual for all purposes as the acts of an executor would be.

Background on Section 8442 of Repealed Code

Section 8442 was added by 1988 Cal. Stat. ch. 1199 § 81.5. The section restated the first sentence of former Probate Code Section 409 (repealed by 1988 Cal. Stat. ch. 1199 § 43), with the addition of court discretion to permit exercise of a discretionary power or authority. For background on the provisions of this part, see the Comment to this part under the part heading.

Article 4. Administrators

§ 8460. Appointment of administrator

Comment. Section 8460 continues Section 8460 of the repealed Probate Code without change. See also Section 9605 (appointment does not discharge any claim decedent has against personal representative).

Background on Section 8460 of Repealed Code

Section 8460 was added by 1988 Cal. Stat. ch. 1199 § 81.5. The section restated the introductory portion of subdivision (a) of former Probate Code Section 422 (repealed by 1988 Cal. Stat. ch. 1199 § 45) without substantive change. For background on the provisions of this part, see the Comment to this part under the part heading.

§ 8461. Priority for appointment

Comment. Section 8461 continues Section 8461 of the repealed Probate Code without change. The general order of priority prescribed in Section 8461 is subject to limitation in the succeeding sections of this article. See, e.g., Sections 8462 (priority of relatives), 8463 (surviving spouse). A person appointed must be legally competent. See Section 8402 (qualifications). See also Sections 140-147 (surviving spouse's waiver of rights at death), 300-301 (trust company as personal representative), 12252 (appointment where subsequent administration necessary after personal representative has been discharged), 12513 (priority of sister state personal representative).

Background on Section 8461 of Repealed Code

Section 8461 was added by 1988 Cal. Stat. ch. 1199 § 81.5. The section restated a portion of subdivision (a) of former Probate Code Section 422 (repealed by 1988 Cal. Stat. ch. 1199 § 45), with the addition of subdivisions (d), (g), (h), and (i) to reflect changes in the law governing intestate succession. See Section 6402 (intestate share of heirs other than surviving spouse). Section 8461 was amended by 1989 Cal. Stat. ch. 544 § 8 to conform the priorities for appointment as administrator more closely to the priorities to take from the decedent by intestate succession. See Section 6402. For background on the provisions of this part, see the Comment to this part under the part heading.

§ 8462. Priority of relatives

Comment. Section 8462 continues Section 8462 of the repealed Probate Code without change. See also Sections 140-147 (surviving spouse's waiver of rights at death).

Background on Section 8462 of Repealed Code

Section 8462 was added by 1988 Cal. Stat. ch. 1199 § 81.5. The section restated subdivision (b) of former Probate Code Section 422 (repealed by 1988 Cal. Stat. ch. 1199 § 45) with the addition of language recognizing the priority of relatives of a predeceased spouse and the expansion of subdivision (b) to include any relative of the decedent who satisfies the prescribed conditions. For background on the provisions of this part, see the Comment to this part under the part heading.

§ 8463. Surviving spouse

Comment. Section 8463 continues Section 8463 of the repealed Probate Code without change. There is an inherent conflict of interest between the surviving spouse and other heirs of the decedent in the situation described in this section. As to the surviving spouse's waiver of rights at death, see Sections 140-147.

Background on Section 8463 of Repealed Code

Section 8463 was added by 1988 Cal. Stat. ch. 1199 § 81.5. The section superseded subdivision (a)(6) and the second paragraph of subdivision (a)(1) of former Probate Code Section 422 (repealed by 1988 Cal. Stat. ch. 1199 § 45). For background on the provisions of this part, see the Comment to this part under the part heading.

§ 8464. Minors and incompetent persons

Comment. Section 8464 continues Section 8464 of the repealed Probate Code without change.

Background on Section 8464 of Repealed Code

Section 8464 was added by 1988 Cal. Stat. ch. 1199 § 81.5. The section restated former Probate Code Section 426 (repealed by 1988 Cal. Stat. ch. 1199 § 45) without substantive change. For background on the provisions of this part, see the Comment to this part under the part heading.

§ 8465. Nominee of person entitled to appointment

Comment. Section 8465 continues Section 8465 of the repealed Probate Code without change. The nominee is not entitled to appointment unless legally competent. See Section 8402 (qualifications).

Background on Section 8465 of Repealed Code

Section 8465 was added by 1988 Cal. Stat. ch. 1199 § 81.5. The section restated without substantive change provisions found in former Probate Code Section 423 (repealed by 1988 Cal. Stat. ch. 1199 § 45). "Grandparent" and "issue" were added to subdivision (b) consistent with Section 8461 (priority for appointment). For background on the provisions of this part, see the Comment to this part under the part heading.

§ 8466. Priority of creditor

Comment. Section 8466 continues Section 8466 of the repealed Probate Code without change. Any person appointed under this section must be legally competent. See Section 8402 (qualifications). See also Section 9605 (appointment of person as personal representative does not discharge any claim the decedent has against the person).

Background on Section 8466 of Repealed Code

Section 8466 was added by 1988 Cal. Stat. ch. 1199 § 81.5. The section restated the last portion of former Probate Code Section 425 (repealed by 1988 Cal. Stat. ch. 1199 § 45) but omitted the requirement that there be a request of another creditor before the court may appoint another person. For background on the provisions of this part, see the Comment to this part under the part heading.

§ 8467. Equal priority

Comment. Section 8467 continues Section 8467 of the repealed Probate Code without change.

Background on Section 8467 of Repealed Code

Section 8467 was added by 1988 Cal. Stat. ch. 1199 § 81.5. The section restated the first portion of former Probate Code Section 425 (repealed by 1988 Cal. Stat. ch. 1199 § 45), with the addition of authority to appoint the public administrator or a disinterested person where there is a conflict between persons of equal priority. For background on the provisions of this part, see the Comment to this part under the part heading.

§ 8468. Failure of persons having priority to claim appointment

Comment. Section 8468 continues Section 8468 of the repealed Probate Code without change. A person appointed under this section must be legally competent. See Section 8402 (qualifications).

Background on Section 8468 of Repealed Code

Section 8468 was added by 1988 Cal. Stat. ch. 1199 § 81.5. The section restated former Probate Code Section 427 (repealed by 1988 Cal. Stat. ch. 1199 § 45) without substantive change. For background on the provisions of this part, see the Comment to this part under the part heading.

Article 5. Bond

§ 8480. Bond required

Comment. Section 8480 continues Section 8480 of the repealed Probate Code without change. Subdivision (c) is a specific application of Code of Civil Procedure Section 996.010. For statutory exceptions to the

bond requirement, see Sections 301 (trust company), 8481 (waiver of bond). See also Code Civ. Proc. §§ 995.310 (sureties on bond), 995.320 (contents of bond), 995.840 (court approval of bond).

Background on Section 8480 of Repealed Code

Section 8480 was added by 1988 Cal. Stat. ch. 1199 § 81.5. Subdivisions (a) and (b) restated without substantive change former Probate Code Section 410 (repealed by 1988 Cal. Stat. ch. 1199 § 43), the first sentence of subdivision (a) of former Probate Code Section 541 (repealed by 1988 Cal. Stat. ch. 1199 § 48), and former Probate Code Section 544 (repealed by 1988 Cal. Stat. ch. 1199 § 48). Subdivision (c) continued the effect of a portion of former Probate Code Section 549 (repealed by 1988 Cal. Stat. ch. 1199 § 48). For background on the provisions of this part, see the Comment to this part under the part heading.

§ 8481. Waiver of bond

Comment. Section 8481 continues Section 8481 of the repealed Probate Code without change. Unless the will requires a bond, the court must dispense with the bond if the bond is properly waived unless good cause is shown under subdivision (b) to require a bond. For provisions on reduction or increase of the amount of the bond, see Code Civ. Proc. §§ 996.010-996.030 (insufficient and excessive bonds).

Background on Section 8481 of Repealed Code

Section 8481 was added by 1988 Cal. Stat. ch. 1199 § 81.5. Subdivision (a)(1) restated without substantive change portions of subdivision (c) of former Probate Code Section 462 (repealed by 1988 Cal. Stat. ch. 1199 § 46) and subdivision (a) of former Probate Code Section 541 (repealed by 1988 Cal. Stat. ch. 1199 § 48). Subdivision (a)(2) restated subdivision (b) of former Section 541 (repealed by 1988 Cal. Stat. ch. 1199 § 48) without substantive change. Subdivision (b) restated the substance of the first sentence of former Probate Code Section 543 (repealed by 1988 Cal. Stat. ch. 1199 § 48) but did not continue the substance of the second sentence of the former section. For background on the provisions of this part, see the Comment to this part under the part heading.

§ 8482. Amount of bond

Comment. Section 8482 continues Section 8482 of the repealed Probate Code without change. See also Section 301 (trust company as personal representative).

Background on Section 8482 of Repealed Code

Section 8482 was added by 1988 Cal. Stat. ch. 1199 § 81.5. Subdivisions (a) and (b) superseded the last sentence of subdivision (a) of former Probate Code Section 541 (repealed by 1988 Cal. Stat. ch. 1199 § 48), making explicit the authority of the court to impose a fixed minimum bond. Subdivision (c) superseded former Probate Code Section 542 (repealed by 1988 Cal. Stat. ch. 1199 § 48). The section was amended by 1989 Cal. Stat. ch. 21 § 19 to make clear that the fixed minimum bond may exceed the maximum established by subdivision (a). See *Communication from the California Law Revision Commission Concerning Assembly Bill 156*, 20 Cal. L. Revision Comm'n Reports 227, 230 (1990). For background on the provisions of this part, see the Comment to this part under the part heading.

§ 8483. Reduction of bond by deposit of assets

Comment. Section 8483 continues Section 8483 of the repealed Probate Code without substantive change. For a comparable provision, see Section 2328 (Guardianship-Conservatorship Law). For the authority of a petitioner for appointment as personal representative to make a deposit described in this section, see Section 8401 (deposit in controlled account).

Background on Section 8483 of Repealed Code

Section 8483 was added by 1988 Cal. Stat. ch. 1199 § 81.5. The section restated subdivision (a) of former Probate Code Section 541.1 (repealed by 1988 Cal. Stat. ch. 1199 § 48) and extended the coverage of the provision to include "personal property" in addition to "money" and "securities." Section 8483 was amended by 1989 Cal. Stat. ch. 544 § 9 to refer to the procedures in Sections 9700-9705 for depositing money in an insured account in a financial institution and depositing personal property with a trust company. This continued a provision of former Section 541.1(a). For background on the provisions of this part, see the Comment to this part under the part heading.

§ 8484. Petition to reduce amount of bond

Comment. Section 8484 continues Section 8484 of the repealed Probate Code without change. For general provisions, see Sections 1020-1023 (petitions), 1200-1221 (notice of hearing), 1250-1252 (request for special notice), 1260-1265 (proof of giving of notice).

Background on Section 8484 of Repealed Code

Section 8484 was added by 1988 Cal. Stat. ch. 1199 § 81.5. The section restated former Probate Code Section 553.3 (repealed by 1988 Cal. Stat. ch. 1199 § 48) without substantive change. For background on the provisions of this part, see the Comment to this part under the part heading.

§ 8485. Substitution or release of sureties

Comment. Section 8485 continues Section 8485 of the repealed Probate Code without change. A copy of the petition and a notice of hearing must be served on the surety. Code Civ. Proc. § 996.110(c). For general provisions, see Sections 1020-1023 (petitions), 1200-1221 (notice of hearing), 1250-1252 (request for special notice), 1260-1265 (proof of giving of notice).

Background on Section 8485 of Repealed Code

Section 8485 was added by 1988 Cal. Stat. ch. 1199 § 81.5. The section restated former Probate Code Section 553.5 (repealed by 1988 Cal. Stat. ch. 1199 § 48) without substantive change. For background on the provisions of this part, see the Comment to this part under the part heading.

§ 8486. Cost of bond

Comment. Section 8486 continues Section 8486 of the repealed Probate Code without change.

Background on Section 8486 of Repealed Code

Section 8486 was added by 1988 Cal. Stat. ch. 1199 § 81.5. The section superseded former Probate Code Section 541.5 (repealed by 1988 Cal. Stat. ch. 1199 § 48). Unlike

the former provision, Section 8486 did not prescribe a fixed or maximum amount, but left the reasonableness of the amount to be determined by market forces. For background on the provisions of this part, see the Comment to this part under the part heading.

§ 8487. Law governing bond

Comment. Section 8487 continues Section 8487 of the repealed Probate Code without substantive change. The Bond and Undertaking Law permits the beneficiary to enforce liability on the bond either by motion in the probate court or by separate civil action. Code Civ. Proc. §§ 996.430, 996.440. Ordinarily, liability on the bond may not be enforced until the personal representative has made a final accounting, the probate court has made an order surcharging the personal representative, and the order has become final. Alexandrou v. Alexander, 37 Cal. App. 3d 306, 311, 112 Cal Rptr. 307 (1974). However, this is not necessary where the personal representative dies or is removed before final accounting, or where the amount of liability is ascertainable without accounting. Id. See also Section 8488 (limitation period for action against sureties on personal representative's bond is four years after discharge).

Background on Section 8487 of Repealed Code

Section 8487 was a new provision added by 1988 Cal. Stat. ch. 1199 § 81.5. The section was a specific application of previously existing law. See Code Civ. Proc. § 995.020 (application of Bond and Undertaking Law). For background on the provisions of this part, see the Comment to this part under the part heading.

§ 8488. Statute of limitation for action against sureties on bond

Comment. Section 8488 continues Section 8488 of the repealed Probate Code without change. This section is comparable to Section 2333 (Guardianship-Conservatorship Law).

Background on Section 8488 of Repealed Code

Section 8488 was a new provision added by 1988 Cal. Stat. ch. 1199 § 81.5. For background on the provisions of this part, see the Comment to this part under the part heading.

Article 6. Removal from Office

§ 8500. Procedure for removal

Comment. Section 8500 continues Section 8500 of the repealed Probate Code without change. The court may enforce its orders by any proper means, including contempt. See Section 7050 (jurisdiction and authority of court or judge). For general provisions, see Sections 1020-1023 (petitions), 1040-1050 (hearings and orders), 1200-1221 (notice of hearing), 1240-1242 (citations), 1250-1252 (request for special notice), 1260-1265 (proof of giving of notice). See also Section 10952 (unless

the court extends the time, the personal representative must file account not later than 60 days after removal).

Background on Section 8500 of Repealed Code

Section 8500 was added by 1988 Cal. Stat. ch. 1199 § 81.5. The section superseded portions of former Probate Code Section 451 (repealed by 1988 Cal. Stat. ch. 1199 § 45). Subdivision (b) restated portions of the first sentence of former Probate Code Section 521 (repealed by 1988 Cal. Stat. ch. 1199 § 47) without substantive change. Subdivision (c) restated former Probate Code Sections 522 and 523 (provisions repealed by 1988 Cal. Stat. ch. 1199 § 47) without substantive change. For background on the provisions of this part, see the Comment to this part under the part heading.

§ 8501. Revocation of letters

Comment. Section 8501 continues Section 8501 of the repealed Probate Code without change. See also Sections 10952 (unless the court extends the time, the personal representative must file account not later than 60 days after removal), 10953 (filing account for incapacitated personal representative).

Background on Section 8501 of Repealed Code

Section 8501 was a new provision added by 1988 Cal. Stat. ch. 1199 § 81.5. The section generalized a provision found in former Probate Code Section 549 (repealed by 1988 Cal. Stat. ch. 1199 § 48). For background on the provisions of this part, see the Comment to this part under the part heading.

§ 8502. Grounds for removal

Comment. Section 8502 continues Section 8502 of the repealed Probate Code without change. A conflict of interest may be ground for removal under subdivision (d); it should be noted, however, that not every conflict necessarily requires removal for protection of the estate, depending on the circumstances of the particular case. Other causes for removal are provided in this article and elsewhere by statute. See, e.g., Section 8500 (failure to attend and answer). For removal provisions elsewhere in statute, see, e.g., Sections 8480 (failure to give required bond), 8577 (failure of nonresident personal representative to file statement of address or statement of change of address), 8804 (failure to file inventory and appraisal within time allowed), 8941 (failure to comply with court order that information necessary to complete appraisal be delivered to probate referee), 10592 (failure to comply with Independent Administration of Estates Act), 11051 (purposeful evasion of personal service of citation), 11052 (failure, after having been cited, to appear and file a required account), 12204 (failure to comply with order concerning closing estate administration). See also Section 10953 (filing account for incapacitated personal representative).

Background on Section 8502 of Repealed Code

Section 8502 was added by 1988 Cal. Stat. ch. 1199 § 81.5. The section restated former Probate Code Section 524 and portions of the first sentence of former Probate

Code Section 521 (provisions repealed by 1988 Cal. Stat. ch. 1199 § 47), except that permanent removal from the state is not continued as a ground for dismissal. See Article 9 (commencing with Section 8570) (nonresident personal representative). For background on the provisions of this part, see the Comment to this part under the part heading.

§ 8503. Removal at request of person with higher priority

Comment. Section 8503 continues Section 8503 of the repealed Probate Code without change. A petition under this section should be accompanied by a petition for appointment of a successor who has higher priority than the existing personal representative. Subdivision (b)(2) is intended to cover the situation, for example, where administration is nearly complete or has otherwise progressed to a point where replacement of the administrator would be inappropriate.

Background on Section 8503 of Repealed Code

Section 8503 was added by 1988 Cal. Stat. ch. 1199 § 81.5. Subdivision (a) superseded former Probate Code Sections 450 and 452 (provisions repealed by 1988 Cal. Stat. ch. 1199 § 45). Subdivision (b)(1) restated former Probate Code Section 453 (repealed by 1988 Cal. Stat. ch. 1199 § 45) without substantive change. Subdivision (b)(2) was a new provision. For background on the provisions of this part, see the Comment to this part under the part heading.

§ 8504. Subsequent probate of will

Comment. Section 8504 continues Section 8504 of the repealed Probate Code without change. See also Section 8226 (effect of admission of will to probate).

Background on Section 8504 of Repealed Code

Section 8504 was added by 1988 Cal. Stat. ch. 1199 § 81.5. The section restated the first portion of the first sentence of former Probate Code Section 510 (repealed by 1988 Cal. Stat. ch. 1199 § 47) without substantive change. For background on the provisions of this part, see the Comment to this part under the part heading.

§ 8505. Contempt for disobeying court order

Comment. Section 8505 continues Section 8505 of the repealed Probate Code without change. See also Sections 8501 (revocation of letters), 8524 (successor personal representative).

Background on Section 8505 of Repealed Code

Section 8505 was added by 1988 Cal. Stat. ch. 1199 § 81.5. The section restated former Probate Code Section 526 (repealed by 1988 Cal. Stat. ch. 1199 § 47), omitting the requirement of 30 days custody. For background on the provisions of this part, see the Comment to this part under the part heading.

Article 7. Changes in Administration

§ 8520. Vacancy in office of personal representative

Comment. Section 8520 continues Section 8520 of the repealed Probate Code without change. A personal representative who resigns is

not excused from liability until accounts are settled and property is delivered to the successor. See Section 8525(b) (effect of vacancy). See also Sections 10952 (unless the court extends the time, the personal representative must file account not later than 60 days after resignation), 10953 (filing account for dead or incapacitated personal representative).

Background on Section 8520 of Repealed Code

Section 8520 was a new provision added by 1988 Cal. Stat. ch. 1199 § 81.5. Section 8520 generalized provisions found in various parts of former law. For background on the provisions of this part, see the Comment to this part under the part heading.

§ 8521. Vacancy where other personal representatives remain

Comment. Section 8521 continues Section 8521 of the repealed Probate Code without change. See also Section 9630 (effect of death, removal, or resignation of one of several joint personal representatives).

Background on Section 8521 of Repealed Code

Section 8521 was added by 1988 Cal. Stat. ch. 1199 § 81.5. The section restated former Probate Code Section 511 (repealed by 1988 Cal. Stat. ch. 1199 § 47) without substantive change. For background on the provisions of this part, see the Comment to this part under the part heading.

§ 8522. Vacancy where no personal representatives remain

Comment. Section 8522 continues Section 8522 of the repealed Probate Code without change.

Background on Section 8522 of Repealed Code

Section 8522 was added by 1988 Cal. Stat. ch. 1199 § 81.5. The section restated former Probate Code Section 512 (repealed by 1988 Cal. Stat. ch. 1199 § 47) and a portion of former Probate Code Section 451 (repealed by 1988 Cal. Stat. ch. 1199 § 45) without substantive change, and generalized the first sentence of former Probate Code Section 406 (repealed by 1988 Cal. Stat. ch. 1199 § 43). For background on the provisions of this part, see the Comment to this part under the part heading.

§ 8523. Interim protection of estate

Comment. Section 8523 continues Section 8523 of the repealed Probate Code without substantive change. See also Sections 10952 (unless the court extends the time, the personal representative must file account not later than 60 days after termination of authority), 10953 (filing account for dead or incapacitated personal representative).

Background on Section 8523 of Repealed Code

Section 8523 was added by 1988 Cal. Stat. ch. 1199 § 81.5. The section superseded the second sentence of former Probate Code Section 520 (repealed by 1988 Cal. Stat. ch. 1199 § 47). For background on the provisions of this part, see the Comment to this part under the part heading.

§ 8524. Powers and duties of successor personal representative

Comment. Section 8524 continues Section 8524 of the repealed Probate Code without substantive change. Subdivisions (b) and (c) are

drawn from Section 3-613 of the Uniform Probate Code (1987). As to the construction of provisions drawn from uniform acts, see Section 2.

Background on Section 8524 of Repealed Code

Section 8524 was added by 1988 Cal. Stat. ch. 1199 § 81.5. Subdivision (a) restated and broadened the application of a portion of former Probate Code Section 466 (repealed by 1988 Cal. Stat. ch. 1199 § 46) and the second sentence of former Probate Code Section 510 (repealed by 1988 Cal. Stat. ch. 1199 § 47). Subdivisions (b) and (c) were new provisions. For background on the provisions of this part, see the Comment to this part under the part heading.

§ 8525. Effect of vacancy

Comment. Section 8525 continues Section 8525 of the repealed Probate Code without substantive change See also Sections 10952 (unless the court extends the time, the personal representative must file account not later than 60 days after termination of authority), 10953 (filing account for dead or incapacitated personal representative).

Background on Section 8525 of Repealed Code

Section 8525 was added by 1988 Cal. Stat. ch. 1199 § 81.5. Subdivision (a) restated former Probate Code Section 525 (repealed by 1988 Cal. Stat. ch. 1199 § 47) without substantive change. The first sentence of subdivision (b) restated the third sentence of former Probate Code Section 520 (repealed by 1988 Cal. Stat. ch. 1199 § 47) without substantive change. The second sentence of subdivision (b) restated the last portion of the first sentence of former Probate Code Section 510 (repealed by 1988 Cal. Stat. ch. 1199 § 47) without substantive change. For background on the provisions of this part, see the Comment to this part under the part heading.

Article 8. Special Administrators

§ 8540. Grounds for appointment; term of office

Comment. Section 8540 continues Section 8540 of the repealed Probate Code without substantive change. Under subdivision (a), grounds for appointment of a special administrator would include situations where (1) no application is made for appointment of a personal representative, (2) there is delay in appointment of a personal representative, (3) a sufficient bond is not given as required by statute or letters are otherwise granted irregularly, (4) the personal representative dies, resigns, or is suspended or removed from office, (5) an appeal is taken from an order revoking probate of a will, (6) there is a will contest pending, (7) appointment is necessary to maintain a lawsuit on the decedent's cause of action, or where (8) for any other cause the personal representative is unable to act. Appointment may be made on the court's own motion or on petition of an interested person.

Subdivision (b) is drawn from Section 3-617 of the Uniform Probate Code (1987). As to the construction of provisions drawn from uniform acts, see Section 2. See also Section 8544 (special powers, duties, and obligations).

A judge may appoint a special administrator in chambers. See Code Civ. Proc. § 166 (actions in chambers). The public administrator may serve as special administrator. See Section 8541.

Background on Section 8540 of Repealed Code

Section 8540 was added by 1988 Cal. Stat. ch. 1199 § 81.5. Subdivision (a) superseded the first clause of former Probate Code Section 460 (repealed by 1988 Cal. Stat. ch. 1199 § 46) and generalized provisions of former Probate Code Sections 465 (repealed by 1988 Cal. Stat. ch. 1199 § 46) and 520 (repealed by 1988 Cal. Stat. ch. 1199 § 47). Subdivision (b) was a new provision. For background on the provisions of this part, see the Comment to this part under the part heading.

§ 8541. Procedure for appointment

Comment. Section 8541 continues Section 8541 of the repealed Probate Code without change. The appointment of, or refusal to appoint, a person as special administrator is not appealable. See Section 7240 (appealable orders and refusals to make orders). The public administrator may no longer be directed by the court to "take charge" of the estate (as under former law) but may be appointed as special administrator. Appointment of a special administrator may be made by the judge in chambers. See Code Civ. Proc. § 166 (actions in chambers).

Background on Section 8541 of Repealed Code

Section 8541 was added by 1988 Cal. Stat. ch. 1199 § 81.5. The section restated former Probate Code Section 461 and the last clause of former Probate Code Section 460 (provisions repealed by 1988 Cal. Stat. ch. 1199 § 46), with the addition of subdivisions (c) and (d). For background on the provisions of this part, see the Comment to this part under the part heading.

§ 8542. Issuance of letters

Comment. Section 8542 continues Section 8542 of the repealed Probate Code without substantive change.

Subdivision (a)(2) is revised to permit the oath to be "attached to" the letters. This revision conforms the provision to Section 8403(b) (general requirement of oath).

The bond must be conditioned that the special administrator will faithfully execute the duties of the office according to law. See Section 8480 (bond required). The judge may approve the bond in chambers. See Code Civ. Proc. § 166 (actions in chambers).

Background on Section 8542 of Repealed Code

Section 8542 was added by 1988 Cal. Stat. ch. 1199 § 81.5. Subdivisions (a) and (b) restated subdivisions (a) and (b) of former Probate Code Section 462 (repealed by 1988 Cal. Stat. ch. 1199 § 46) without substantive change. Subdivision (c) was a new provision. For background on the provisions of this part, see the Comment to this part under the part heading.

§ 8543. Waiver of bond

Comment. Section 8543 continues the substance of Section 8543 of the repealed Probate Code with the addition of the provision relating to waiver of bond by all the beneficiaries. This addition conforms Section 8543 to Section 8481 (waiver of bond of personal representative). Notwithstanding waiver of bond in the will or by all the beneficiaries, the court, on petition of an interested person or on its own motion, may for good cause require that a bond be given, either before or after issuance of letters. See Section 8481(b).

Background on Section 8543 of Repealed Code

Section 8543 was added by 1988 Cal. Stat. ch. 1199 § 81.5. The section restated a portion of subdivision (c) of former Probate Code Section 462 (repealed by 1988 Cal. Stat. ch. 1199 § 46) without substantive change. For background on the provisions of this part, see the Comment to this part under the part heading.

§ 8544. Special powers, duties, and obligations

Comment. Section 8544 continues Section 8544 of the repealed Probate Code without substantive change. Subdivision (c) is revised to eliminate any implication that a general personal representative is personally liable on a creditor's claim. Among the other powers that the court may grant the special administrator is the power to disclaim. See Section 277(b) (disclaimer on behalf of decedent to be made by personal representative of decedent). See also Section 58 ("personal representative" includes a special administrator).

Background on Section 8544 of Repealed Code

Section 8544 was added by 1988 Cal. Stat. ch. 1199 § 81.5. Subdivisions (a), (b), and (c) restated former Probate Code Section 463 (repealed by 1988 Cal. Stat. ch. 1199 § 46) without substantive change and superseded a portion of former Probate Code Section 460 (repealed by 1988 Cal. Stat. ch. 1199 § 46). Subdivision (b)(2) restated former Probate Code Section 464 (repealed by 1988 Cal. Stat. ch. 1199 § 46), with the addition of a provision that the order remains in effect until appointment of a successor. Subdivision (d) was a new provision. For background on the provisions of this part, see the Comment to this part under the part heading.

§ 8545. Special administrator with powers and duties of a general personal representative

Comment. Section 8545 continues Section 8545 of the repealed Probate Code with the addition of the introductory clause of subdivision (b) which makes clear that the provisions relating to waiver of the bond requirement apply to subdivision (b). Instances where it might be proper to grant general powers, duties, and obligations include situations where:

(1) The special administrator is appointed pending determination of a will contest or pending an appeal from an order appointing or removing the personal representative.

(2) After appointment of the special administrator a will contest is instituted.

(3) An appeal is taken from an order revoking probate of a will.

A special administrator with general powers has the power to make distributions to the same extent as any other general administrator, unless limited by the court. See, e.g., Estate of Buchman, 132 Cal. App. 2d 81, 281 P.2d 608 (1955) cert. denied 350 U.S. 873 (1955).

Background on Section 8545 of Repealed Code

Section 8545 was added by 1988 Cal. Stat. ch. 1199 § 81.5. The section superseded former Probate Code Section 465 (repealed by 1988 Cal. Stat. ch. 1199 § 46). For background on the provisions of this part, see the Comment to this part under the part heading.

§ 8546. Termination of authority

Comment. Section 8546 continues Section 8546 of the repealed Probate Code without substantive change. The requirement that the account be verified has been omitted as unnecessary in view of Section 1021(b)(2). The personal representative may prosecute to final judgment any suit commenced by the special administrator. See Section 8524 (successor personal representative).

Background on Section 8546 of Repealed Code

Section 8546 was added by 1988 Cal. Stat. ch. 1199 § 81.5. Subdivisions (a) and (b) restated former Probate Code Section 466 (repealed by 1988 Cal. Stat. ch. 1199 § 46), with the addition of language expressly permitting court authorization of the special administrator to complete ongoing transactions. Subdivision (c) restated the first sentence of former Probate Code Section 467 (repealed by 1988 Cal. Stat. ch. 1199 § 46), with the addition of language permitting a consolidated account where the special administrator and general personal representative are the same person. For background on the provisions of this part, see the Comment to this part under the part heading.

§ 8547. Compensation of special administrator

Comment. Section 8547 continues Section 8547 of the repealed Probate Code without change. This section does not apply in any proceeding for administration of a decedent's estate commenced before January 1, 1991. See Section 900. As to the law applicable in a proceeding commenced before January 1, 1991, see Section 900. As to the application of any amendments made after that date, see Section 3.

Background on Section 8547 of Repealed Code

Section 8547 was added by 1988 Cal. Stat. ch. 1199 § 81.5. Subdivisions (a)-(c) of Section 8547 of the repealed Probate Code restated former Probate Code Sections 467-468 (repealed by 1988 Cal. Stat. ch. 1199 § 46), with the addition of provisions limiting payment of the special administrator until close of administration (except for extra allowances) and recognizing agreements of the special administrator, personal representative, and attorneys as to division of fees and commissions. Subdivision (d) of Section 8547 of the repealed Probate Code superseded former Probate Code Section

469 (repealed by 1988 Cal. Stat. ch. 1199 § 46), and was amended by 1989 Cal. Stat. ch. 21 § 20 to incorporate material omitted in the recodification of former Section 469. See *Communication from the California Law Revision Commission Concerning Assembly Bill 156*, 20 Cal. L. Revision Comm'n Reports 227, 230 (1990). Section 8547 was amended by 1990 Cal. Stat. [AB 831] to change "commission and allowances" to "compensation", consistent with the terminology used in Part 7 (commencing with Section 10800) (compensation of personal representative), and to delete subdivisions (c) and (d) which concerned attorneys' compensation. Attorneys' compensation is governed by Sections 9681-9686. For background on the provisions of this part, see the Comment to this part under the part heading. See also *Recommendations Relating to Probate Law: Hiring and Paying Attorneys, Advisors, and Others; Compensation of Personal Representative*, 20 Cal. L. Revision Comm'n Reports 31 (1990).

Article 9. Nonresident Personal Representative

§ 8570. "Nonresident personal representative" defined

Comment. Section 8570 continues Section 8570 of the repealed Probate Code without change.

Background on Section 8570 of Repealed Code

Section 8570 was a new provision added by 1988 Cal. Stat. ch. 1199 § 81.5. For background on the provisions of this part, see the Comment to this part under the part heading.

§ 8571. Bond of nonresident personal representative

Comment. Section 8571 continues Section 8571 of the repealed Probate Code without change. This section is a specific application of subdivision (b) of Section 8481 (waiver of bond).

Background on Section 8571 of Repealed Code

Section 8571 was a new provision added by 1988 Cal. Stat. ch. 1199 § 81.5. For background on the provisions of this part, see the Comment to this part under the part heading.

§ 8572. Secretary of State as attorney for service

Comment. Section 8572 continues Section 8572 of the repealed Probate Code without substantive change.

Background on Section 8572 of Repealed Code

Section 8572 was added by 1988 Cal. Stat. ch. 1199 § 81.5. The section restated former Probate Code Section 405.1 (repealed by 1988 Cal. Stat. ch. 1199 § 43) without substantive change. For background on the provisions of this part, see the Comment to this part under the part heading.

§ 8573. Statement of address

Comment. Section 8573 continues Section 8573 of the repealed Probate Code without change. Failure to comply with this section is cause for removal from office. See Section 8577.

Background on Section 8573 of Repealed Code

Section 8573 was added by 1988 Cal. Stat. ch. 1199 § 81.5. The section restated former Probate Code Section 405.2 (repealed by 1988 Cal. Stat. ch. 1199 § 43), with

the omission of the acknowledgment requirement. For background on the provisions of this part, see the Comment to this part under the part heading.

§ 8574. Manner of service

Comment. Section 8574 continues Section 8574 of the repealed Probate Code without change. As to the time limits for an answer or for hearing on a motion, see Section 8576.

Background on Section 8574 of Repealed Code

Section 8574 was added by 1988 Cal. Stat. ch. 1199 § 81.5. The section restated former Probate Code Section 405.3 (repealed by 1988 Cal. Stat. ch. 1199 § 43) without substantive change. For background on the provisions of this part, see the Comment to this part under the part heading.

§ 8575. Proof of service

Comment. Section 8575 continues Section 8575 of the repealed Probate Code without change.

Background on Section 8575 of Repealed Code

Section 8575 was added by 1988 Cal. Stat. ch. 1199 § 81.5. The section restated former Probate Code Section 405.4 (repealed by 1988 Cal. Stat. ch. 1199 § 43) without substantive change. For background on the provisions of this part, see the Comment to this part under the part heading.

§ 8576. Effect of service; time limits for answer or hearing of motion

Comment. Section 8576 continues Section 8576 of the repealed Probate Code without change.

Background on Section 8576 of Repealed Code

Section 8576 was added by 1988 Cal. Stat. ch. 1199 § 81.5. The section restated former Probate Code Section 405.5 (repealed by 1988 Cal. Stat. ch. 1199 § 43) without substantive change. For background on the provisions of this part, see the Comment to this part under the part heading.

§ 8577. Removal from office for failure to file statement of address

Comment. Section 8577 continues Section 8577 of the repealed Probate Code without change.

Background on Section 8577 of Repealed Code

Section 8577 was added by 1988 Cal. Stat. ch. 1199 § 81.5. Subdivision (a) restated former Probate Code Section 405.6 (repealed by 1988 Cal. Stat. ch. 1199 § 43) without substantive change. Subdivision (b) was a new provision. For background on the provisions of this part, see the Comment to this part under the part heading.

PART 3. INVENTORY AND APPRAISAL

Comment. This part supersedes Part 3 (commencing with Section 8800) of Division 7 of the repealed Probate Code. The superseded part was enacted upon recommendation of the California Law Revision Commission. See *Recommendation Relating to Inventory and Appraisal,* 19 Cal. L. Revision Comm'n Reports 741 (1988). See also *Communication from the California Law Revision Commission*

Concerning Assembly Bill 2841, 19 Cal. L. Revision Comm'n Reports 1201, 1235-38 (1988).

The inventory and appraisal procedure provided in this part applies to valuation in administration of decedents' estates, but may be incorporated in other proceedings. For example, in a small estate set-aside proceeding under Chapter 6 (commencing with Section 6600) of Part 3 of Division 6, an inventory and appraisal of the decedent's estate is required as provided in Section 6608. No inventory and appraisal of the decedent's estate is required where it is disposed of without administration under Division 8 (commencing with Section 13000) except to the extent an inventory and appraisal is required pursuant to Section 13103 (affidavit procedure for collection or transfer of personal property), subdivision (b) of Section 13152 (court order determining succession to real property), subdivision (c) of Section 13200 (affidavit procedure for real property of small value), or Section 13658 (property passing or belonging to surviving spouse).

CHAPTER 1. GENERAL PROVISIONS

§ 8800. Inventory and appraisal required

Comment. Section 8800 continues Section 8800 of the repealed Probate Code without change. The four-month period may be extended by the court either on prior authorization or by subsequent excuse. A further time might be reasonable, for example, in an estate for which a federal estate tax return is necessary and additional time is required in order to ensure that the property is valued consistently. See also Code Civ. Proc. § 166 (actions in chambers).

Background on Section 8800 of Repealed Code

Section 8800 was added by 1988 Cal. Stat. ch. 1199 § 82.5. The section superseded the first portion of the first sentence of former Probate Code Section 600 (repealed by 1988 Cal. Stat. ch. 1199 § 51). It extended the time for filing the inventory and appraisal from three to four months. For background on the provisions of this part, see the Comment to this part under the part heading.

§ 8801. Supplemental inventory and appraisal

Comment. Section 8801 continues Section 8801 of the repealed Probate Code without change. For enforcement of this requirement, see Section 8804 (failure to timely file inventory and appraisal).

Background on Section 8801 of Repealed Code

Section 8801 was added by 1988 Cal. Stat. ch. 1199 § 82.5. The section superseded former Probate Code Section 611 (repealed by 1988 Cal. Stat. ch. 1199 § 51), extending the two-month time for filing to four months, parallel to Section 8800 (inventory and appraisal required). For background on the provisions of this part, see the Comment to this part under the part heading.

§ 8802. Form of inventory and appraisal

Comment. Section 8802 continues Section 8802 of the repealed Probate Code without change.

Background on Section 8802 of Repealed Code

Section 8802 was added by 1988 Cal. Stat. ch. 1199 § 82.5. The section restated the fifth sentence of former Probate Code Section 600 (repealed by 1988 Cal. Stat. ch. 1199 § 51). For background on the provisions of this part, see the Comment to this part under the part heading.

§ 8803. Notice of filing of inventory and appraisal

Comment. Section 8803 continues Section 8803 of the repealed Probate Code without change.

Background on Section 8803 of Repealed Code

Section 8803 was a new provision added by 1988 Cal. Stat. ch. 1199 § 82.5. For background on the provisions of this part, see the Comment to this part under the part heading.

§ 8804. Failure to timely file inventory and appraisal

Comment. Section 8804 continues Section 8804 of the repealed Probate Code without change. The time allowed under this chapter for filing an inventory and appraisal includes any court extension of the statutory times under Sections 8800 (inventory and appraisal required) and 8801 (supplemental inventory and appraisal). Section 8804 is limited to negligent or willful noncompliance by the personal representative and does not apply where the personal representative is unable to file the inventory and appraisal due to the probate referee's delay, or where the personal representative made a good faith effort to file but was unable to do so due to circumstances beyond the personal representative's control. For delay caused by the probate referee, see Article 3 (commencing with Section 8940) of Chapter 3.

Subdivision (a) incorporates the procedure for compelling an account. Subdivision (b) provides for removal as an independent sanction. For the removal procedure, see Article 6 (commencing with Section 8500) of Chapter 4 of Part 2 of Division 7. This supplements the removal sanction that is part of the procedure under subdivision (a) to compel a filing.

Under subdivision (c), liability for injury arising from the refusal or failure of the personal representative to timely file the inventory and appraisal may include attorney's fees incurred in proceedings to compel the filing. Liability of the personal representative and of the sureties on the bond is joint and several. See Code Civ. Proc. § 996.460. See generally Code Civ. Proc. § 996.410 et seq.

Background on Section 8804 of Repealed Code

Section 8804 was added by 1988 Cal. Stat. ch. 1199 § 82.5. The section restated former Probate Code Section 610 and a portion of former Probate Code Section 611

(provisions repealed by 1988 Cal. Stat. ch. 1199 § 51) without substantive change. Subdivision (a) was a new provision. For background on the provisions of this part, see the Comment to this part under the part heading.

CHAPTER 2. INVENTORY

Article 1. General Provisions

§ 8850. Contents of inventory

Comment. Section 8850 continues Section 8850 of the repealed Probate Code without change. Subdivision (b)(1) includes a requirement of precise identification of real property security in order to achieve an accurate inventory for appraisal of the underlying obligation.

Background on Section 8850 of Repealed Code

Section 8850 was added by 1988 Cal. Stat. ch. 1199 § 82.5. Subdivisions (a) and (b) restated the third and fourth sentences of former Probate Code Section 600 (repealed by 1988 Cal. Stat. ch. 1199 § 51) without substantive change. Subdivision (c) restated former Probate Code Section 601 (repealed by 1988 Cal. Stat. ch. 1199 § 51), with the addition of the reference to quasi-community property. For background on the provisions of this part, see the Comment to this part under the part heading.

§ 8851. Discharge or devise of claims

Comment. Section 8851 continues Section 8851 of the repealed Probate Code without change.

Background on Section 8851 of Repealed Code

Section 8851 was added by 1988 Cal. Stat. ch. 1199 § 82.5. The section restated former Probate Code Section 603 (repealed by 1988 Cal. Stat. ch. 1199 § 51) without substantive change. For background on the provisions of this part, see the Comment to this part under the part heading.

§ 8852. Oath of personal representative

Comment. Section 8852 continues Section 8852 of the repealed Probate Code without change. The requirement of an oath may be satisfied by a written affirmation. See Code Civ. Proc. § 2015.6. Subdivision (b) is an exception to the rule of Section 9630 (where there is more than one personal representative, a majority may act).

Background on Section 8852 of Repealed Code

Section 8852 was added by 1988 Cal. Stat. ch. 1199 § 82.5. Subdivision (a) restated former Probate Code Section 604 (repealed by 1988 Cal. Stat. ch. 1199 § 51) without substantive change. Subdivision (b) was a new provision. For background on the provisions of this part, see the Comment to this part under the part heading.

Article 2. Discovery of Property of Decedent

§ 8870. Citation to appear and be examined concerning decedent's property

Comment. Section 8870 continues Section 8870 of the repealed Probate Code without substantive change. See also Code Civ. Proc.

§ 166 (actions in chambers). For general provisions, see Sections 1020-1023 (petitions and other papers), 1240-1242 (citations).

Background on Section 8870 of Repealed Code

Section 8870 was added by 1988 Cal. Stat. ch. 1199 § 82.5. Subdivisions (a) and (b) restated the first two sentences of former Probate Code Section 613 (repealed by 1988 Cal. Stat. ch. 1199 § 51). Subdivision (c) superseded the first sentence of former Probate Code Section 614 (repealed by 1988 Cal. Stat. ch. 1199 § 51). For background on the provisions of this part, see the Comment to this part under the part heading.

§ 8871. Interrogatories

Comment. Section 8871 continues Section 8871 of the repealed Probate Code without change.

Background on Section 8871 of Repealed Code

Section 8871 was added by 1988 Cal. Stat. ch. 1199 § 82.5. The section restated the third sentence and a portion of the first sentence of former Probate Code Section 614 (repealed by 1988 Cal. Stat. ch. 1199 § 51) without substantive change. For background on the provisions of this part, see the Comment to this part under the part heading.

§ 8872. Examination

Comment. Section 8872 continues Section 8872 of the repealed Probate Code without change. The court order of disclosure is enforceable in the same manner as other court orders. See, e.g., Code Civ. Proc. § 1209 (contempt). See also Section 1000 (general rules of practice).

Background on Section 8872 of Repealed Code

Section 8872 was added by 1988 Cal. Stat. ch. 1199 § 82.5. Subdivisions (a) and (b) restated the second and fourth sentences of former Probate Code Section 614 (repealed by 1988 Cal. Stat. ch. 1199 § 51). Subdivision (c) superseded the third sentence of former Probate Code Section 613 (repealed by 1988 Cal. Stat. ch. 1199 § 51). For background on the provisions of this part, see the Comment to this part under the part heading.

§ 8873. Citation to appear and account

Comment. Section 8873 continues Section 8873 of the repealed Probate Code without change. The duty to account under this section includes both property entrusted to a person and property that comes into the person's possession, including money, accounts, and other property and papers. For general provisions governing issuance and enforcement of citations, see Sections 1240-1242. See also Code Civ. Proc. § 166 (actions in chambers).

Background on Section 8873 of Repealed Code

Section 8873 was added by 1988 Cal. Stat. ch. 1199 § 82.5. The section restated former Probate Code Section 615 (repealed by 1988 Cal. Stat. ch. 1199 § 51) without substantive change. For background on the provisions of this part, see the Comment to this part under the part heading.

§ 8874. Wrongful taking, concealment, or disposition of property in estate

Comment. Section 8874 continues Section 8874 of the repealed Probate Code without change.

Background on Section 8874 of Repealed Code

Section 8874 was added by 1988 Cal. Stat. ch. 1199 § 82.5. The section restated former Probate Code Section 612 (repealed by 1988 Cal. Stat. ch. 1199 § 51) with the addition of a bad faith limitation. For background on the provisions of this part, see the Comment to this part under the part heading.

CHAPTER 3. APPRAISAL

Article 1. Procedure

§ 8900. Appraisal by personal representative, probate referee, and independent expert

Comment. Section 8900 continues Section 8900 of the repealed Probate Code without change. Designation of a probate referee is made pursuant to Article 2 (commencing with Section 8920). The appraisal is made of the fair market value of the property at the time of the decedent's death. See Section 8802 (form of inventory and appraisal). See also Section 8904 (appraisal by independent expert).

Background on Section 8900 of Repealed Code

Section 8900 was added by 1988 Cal. Stat. ch. 1199 § 82.5. The section restated the introductory clause of subdivision (a) of former Probate Code Section 605 (repealed by 1988 Cal. Stat. ch. 1199 § 51) with the addition of the reference to an independent expert. For background on the provisions of this part, see the Comment to this part under the part heading.

§ 8901. Appraisal by personal representative

Comment. Section 8901 continues Section 8901 of the repealed Probate Code without change. The personal representative may appraise an item listed in subdivision (b) or (d), as well as items listed in subdivisions (a), (c), and (e), only if its fair market value can be determined solely from its face without calculation or reference to other sources. See introductory clause of Section 8901.

Background on Section 8901 of Repealed Code

Section 8901 was added by 1988 Cal. Stat. ch. 1199 § 82.5. Subdivisions (a), (c), and (e) restated paragraph (1) of subdivision (a) of former Section 605 (repealed by 1988 Cal. Stat. ch. 1199 § 51) with the addition of annuities in subdivision (e). The definition of "cash item" in subdivision (a) was consistent with existing practice. California Probate Referees' Ass'n, Probate Referees' Procedures Guide 9 (1985). Subdivisions (b) and (d) were new provisions. For background on the provisions of this part, see the Comment to this part under the part heading.

§ 8902. Appraisal by probate referee

Comment. Section 8902 continues Section 8902 of the repealed Probate Code without change. A statutory exception to the duty to deliver an inventory to the probate referee occurs in the case of a waiver of appraisal by the probate referee. See Section 8903. The personal representative must furnish the referee such information as the referee requires concerning the assets appraised by the personal representative or to be appraised by the probate referee. See Sections 450-453 (powers of probate referee). Designation of a probate referee is made pursuant to Article 2 (commencing with Section 8920).

The probate referee may serve an appraisal function in areas outside of decedent estate administration. For example, in a small estate set-aside proceeding under Chapter 6 (commencing with Section 6600) of Part 3 of Division 6, an inventory and appraisal of the decedent's estate is required as provided in Section 6608. No inventory and appraisal of the decedent's estate is required where it is disposed of without administration under Division 8 (commencing with Section 13000) except to the extent an inventory and appraisal is required pursuant to Section 13103 (affidavit procedure for collection or transfer of personal property), subdivision (b) of Section 13152 (court order determining succession to real property), subdivision (c) of Section 13200 (affidavit procedure for real property of small value), or Section 13658 (property passing or belonging to surviving spouse).

There are statutory exceptions to appraisal by the probate referee. See, e.g., Section 2610 (inventory and appraisal of conservatorship under Lanterman-Petris-Short Act). For waiver of the probate referee, see Section 8903. For appraisal by an independent expert, see Section 8904.

Background on Section 8902 of Repealed Code

Section 8902 was added by 1988 Cal. Stat. ch. 1199 § 82.5. Subdivision (a) codified the previously existing practice. Subdivision (b) restated a portion of paragraph (2) of subdivision (a) of former Probate Code Section 605 (repealed by 1988 Cal. Stat. ch. 1199 § 51). For background on the provisions of this part, see the Comment to this part under the part heading.

§ 8903. Waiver of appraisal by probate referee

Comment. Section 8903 restates Section 8903 of the repealed Probate Code without substantive change. If a probate referee opposes a waiver petition without substantial justification, the court must award litigation expenses against the referee. Moreover, a probate referee who opposes the petition ordinarily should not appraise the property in the estate. Neither the probate referee who opposed the petition, nor any other probate referee in the same office or with whom the referee has a

financial arrangement, should appraise, share in the commission, or in any other manner benefit from the appraisal of property in the estate as a result of the opposition. However, the court in an unusual case may allow an appraisal by the opposing referee. For example, in a small county with only one referee where it is a problem to obtain a referee from another county, the court might designate the opposing referee if in the court's judgment the situation is such that it is satisfactory to allow the opposing referee to appraise the property.

A waiver petition may be made under Section 8903 at any time before an inventory is delivered to the probate referee, including a combined waiver and petition to open administration or a combined waiver and petition for final distribution.

For general provisions, see Sections 1000-1004 (rules of practice), 1020-1023 (petitions and other papers), 1040-1050 (hearings and orders), 1200-1230 (notice of hearing), 1250-1252 (request for special notice), 1260-1265 (proof of giving of notice).

Background on Section 8903 of Repealed Code

Section 8903 was added by 1988 Cal. Stat. ch. 1199 § 82.5. The section restated paragraphs (2) and (3) of subdivision (a) of former Probate Code Section 605 (repealed by 1988 Cal. Stat. ch. 1199 § 51), with the following revisions:

(1) A provision was added to make clear that the application for waiver is made by petition and to specify the time within which the petition must be made.

(2) A provision was added that the inventory and appraisal attached to the petition is to be filed pursuant to Section 8800 (inventory and appraisal required).

(3) The court was required to award litigation expenses against a probate referee who opposes a waiver petition without substantial justification.

(4) The court was given authority to appoint another referee to appraise the property in the estate if the opposition succeeds.

For background on the provisions of this part, see the Comment to this part under the part heading.

§ 8904. Appraisal by independent expert

Comment. Section 8904 continues Section 8904 of the repealed Probate Code without change. If the Judicial Council adopts a form for the inventory and appraisal filed with the court, the independent expert appraisal must be filed in that form or otherwise comply with Judicial Council rules for completing the form. See Section 1001 (Judicial Council and local court rules). See also Section 8802 (form of inventory and appraisal).

Background on Section 8904 of Repealed Code

Section 8904 was a new provision added by 1988 Cal. Stat. ch. 1199 § 82.5. For background on the provisions of this part, see the Comment to this part under the part heading.

§ 8905. Verification of appraisal

Comment. Section 8905 continues Section 8905 of the repealed Probate Code without change. The requirement of subscription of an oath may be satisfied by a written affirmation or a declaration under penalty of perjury. See Code Civ. Proc. §§ 2015.5-2015.6.

Background on Section 8905 of Repealed Code

Section 8905 was added by 1988 Cal. Stat. ch. 1199 § 82.5. The section restated former Probate Code Section 608 (repealed by 1988 Cal. Stat. ch. 1199 § 51), with the inclusion of an independent appraisal expert. See Section 8904. For background on the provisions of this part, see the Comment to this part under the part heading.

§ 8906. Objection to appraisal

Comment. Section 8906 continues Section 8906 of the repealed Probate Code without substantive change. See also Section 8908 (appraisal report, backup data, and justification of appraisal). For objection to the inventory, other procedures are available. See, e.g., Chapter 11 (commencing with Section 9860) of Part 5 (conveyance or transfer of property claimed to belong to decedent or other person).

For general provisions, see Sections 1000-1004 (rules of practice), 1020-1023 (petitions and other papers), 1040-1050 (hearings and orders), 1200-1230 (notice of hearing), 1250-1252 (request for special notice), 1260-1265 (proof of giving of notice).

Background on Section 8906 of Repealed Code

Section 8906 was added by 1988 Cal. Stat. ch. 1199 § 82.5. The section restated former Probate Code Section 608.5 (repealed by 1988 Cal. Stat. ch. 1199 § 51), but added provision for an award of fees and costs in the event of a frivolous objection. It was drawn from former Probate Code Section 927 (repealed by 1988 Cal. Stat. ch. 1199 § 54.5) and from former Revenue and Taxation Code Sections 14510-14513 (provisions repealed by 1982 Cal. Stat. ch. 1535 § 14). For background on the provisions of this part, see the Comment to this part under the part heading.

§ 8907. Fee for appraisal by personal representative

Comment. Section 8907 continues Section 8907 of the repealed Probate Code with the omission of the reference to the personal representative's attorney. The omitted reference is no longer needed since the compensation of the attorney is fixed by agreement and the court no longer awards the attorney extra compensation for extraordinary services. See Sections 9680-9686. It should be noted that the limitation in this section applies only to appraisal of property; it does not affect estate tax work performed by the attorney.

Background on Section 8907 of Repealed Code

Section 8907 was added by 1988 Cal. Stat. ch. 1199 § 82.5. The section restated subdivision (c) of former Probate Code Section 605 (repealed by 1988 Cal. Stat. ch. 1199 § 51) and expanded it to preclude extra compensation not only for appraising cash items but also for appraising other property in the estate. For background on the provisions of this part, see the Comment to this part under the part heading.

§ 8908. Appraisal report, backup data, and justification of appraisal

Comment. Section 8908 continues Section 8908 of the repealed Probate Code without change. Backup data required pursuant to subdivision (a) might include, for example, a listing of comparable sales used in the appraisal. Confidential information that may not be disclosed includes tax assessor information obtained by the probate referee pursuant to Section 408 of the Revenue and Taxation Code. The determination of an appropriate fee under subdivision (b) will depend in part upon the quality of the appraisal and whether the contest of the appraisal is reasonable.

Background on Section 8908 of Repealed Code

Section 8908 was a new provision added by 1988 Cal. Stat. ch. 1199 § 82.5. For background on the provisions of this part, see the Comment to this part under the part heading.

§ 8909. Retention of records by probate referee

Comment. Section 8909 continues Section 8909 of the repealed Probate Code without change.

Background on Section 8909 of Repealed Code

Section 8909 was a new provision added by 1988 Cal. Stat. ch. 1199 § 82.5. For background on the provisions of this part, see the Comment to this part under the part heading.

Article 2. Designation and Removal of Probate Referee

§ 8920. Designation by court

Comment. Section 8920 continues Section 8920 of the repealed Probate Code without change. Where there is no person able to act, whether because all are disqualified or removed or because there are an insufficient number appointed or because the court elects not to designate a particular probate referee or otherwise, the court may designate a probate referee from another county. For designation of a probate referee for sale of real property, see Section 10309 (minimum price for private sale of real property). The designation of a probate referee may be made by the judge in chambers. See Code Civ. Proc. § 166 (actions in chambers).

Background on Section 8920 of Repealed Code

Section 8920 was added by 1988 Cal. Stat. ch. 1199 § 82.5. The section restated a portion of paragraph (2) of subdivision (a) of former Probate Code Section 605 (repealed by 1988 Cal. Stat. ch. 1199 § 51) and made clear that the probate referee is designated from the panel appointed for the county by the State Controller. See Section 400 (appointment by Controller). The provision that the court may appoint a probate referee from another county under specified circumstances codified the previously existing practice. For background on the provisions of this part, see the Comment to this part under the part heading.

§ 8921. Designation at request of personal representative

Comment. Section 8921 continues Section 8921 of the repealed Probate Code without change.

Background on Section 8921 of Repealed Code

Section 8921 was a new provision added by 1988 Cal. Stat. ch. 1199 § 82.5. For background on the provisions of this part, see the Comment to this part under the part heading.

§ 8922. Discretion not to designate person as probate referee

Comment. Section 8922 continues Section 8922 of the repealed Probate Code without change. The court may, but is not required to, designate probate referees in rotation from the panel for the county, or may use any other system of designation. The court may refuse to designate a particular person as probate referee if experience with that person is unsatisfactory, if experience with that person's office or staff (including office or staff shared with other probate referees) is generally unsatisfactory, or for other proper reasons in the court's discretion. Among the proper reasons for refusal to designate a particular person as probate referee is that the person is habitually unduly slow in making appraisals, due to overwork or otherwise. This example is given by way of illustration and is not intended as a comprehensive listing of reasons. Where there is no satisfactory probate referee for the county, or a sufficient number of satisfactory probate referees for the county is lacking, the court may designate a probate referee from the panel appointed for another county. See Section 8920 (designation by court).

Background on Section 8922 of Repealed Code

Section 8922 was a new provision added by 1988 Cal. Stat. ch. 1199 § 82.5. For background on the provisions of this part, see the Comment to this part under the part heading.

§ 8923. Disqualification of probate referee

Comment. Section 8923 continues Section 8923 of the repealed Probate Code without change. The prohibition in subdivision (a) includes deputy clerks as well. See Gov't Code § 24100.

Background on Section 8923 of Repealed Code

Section 8923 was added by 1988 Cal. Stat. ch. 1199 § 82.5. The section restated former Probate Code Section 606 (repealed by 1988 Cal. Stat. ch. 1199 § 51) with the addition of references to a commissioner. For background on the provisions of this part, see the Comment to this part under the part heading.

§ 8924. Removal of probate referee

Comment. Section 8924 continues Section 8924 of the repealed Probate Code without substantive change. Other causes provided by statute for removal of a probate referee include failure to make a timely

appraisal or report. See Section 8941 (hearing and order). If experience with all the probate referees in a particular office is unsatisfactory, a referee from that office can be removed pursuant to Section 8924 or designation of a referee from that office can be avoided pursuant to Section 8922 (discretion not to designate a person as probate referee).

For general provisions, see Sections 1000-1004 (rules of practice), 1020-1023 (petitions and other papers), 1040-1050 (hearings and orders), 1200-1230 (notice of hearing), 1250-1252 (request for special notice), 1260-1265 (proof of giving of notice).

Background on Section 8924 of Repealed Code

Section 8924 was a new provision added by 1988 Cal. Stat. ch. 1199 § 82.5. For background on the provisions of this part, see the Comment to this part under the part heading.

Article 3. Time for Probate Referee Appraisal

§ 8940. Time required for appraisal or status report

Comment. Section 8940 continues Section 8940 of the repealed Probate Code without change. The personal representative must deliver an inventory together with supporting data to the probate referee. Section 8902 (appraisal by probate referee). Subdivision (a) of Section 8940 requires the probate referee to act promptly and diligently in making the appraisal, which in the ordinary case should occur well before the 60-day period provided in subdivision (b) has run. The 60-day period provided in subdivision (b) should be viewed as an unusually long period and not as the norm for accomplishing the appraisal.

Background on Section 8940 of Repealed Code

Section 8940 was a new provision added by 1988 Cal. Stat. ch. 1199 § 82.5. The section was drawn from a portion of former Probate Code Section 1025.5 (time for closing estate) (repealed by 1988 Cal. Stat. ch. 1199 § 55.5). For background on the provisions of this part, see the Comment to this part under the part heading.

§ 8941. Hearing and order

Comment. Section 8941 continues Section 8941 of the repealed Probate Code without change. Reduction of the probate referee's commission under subdivision (c)(3) may be appropriate if the time taken was within the control of the referee and was not in the best interest of the estate or interested persons. In making such a determination, the court should take into account any previous action taken under this article as a result of the delay. Removal of the personal representative under subdivision (c)(4) may be appropriate where the personal representative's failure to supply necessary information is hindering completion of the appraisal.

For general provisions, see Sections 1000-1004 (rules of practice), 1020-1023 (petitions and other papers), 1040-1050 (hearings and orders), 1200-1230 (notice of hearing), 1240-1242 (citations), 1250-1252 (request for special notice), 1260-1265 (proof of giving of notice).

Background on Section 8941 of Repealed Code

Section 8941 was a new provision added by 1988 Cal. Stat. ch. 1199 § 82.5. The section was drawn from a portion of former Probate Code Section 1025.5 (time for closing estate) (repealed by 1988 Cal. Stat. ch. 1199 § 55.5). For background on the provisions of this part, see the Comment to this part under the part heading.

Article 4. Commission and Expenses of Probate Referee

§ 8960. Payment of commission and expenses

Comment. Section 8960 continues Section 8960 of the repealed Probate Code without change. Section 11420 provides the highest priority for payment of expenses of administration, which take precedence over all other debts.

Background on Section 8960 of Repealed Code

Section 8960 was added by 1988 Cal. Stat. ch. 1199 § 82.5. Subdivision (a) restated a portion of the first sentence of the first paragraph of former Probate Code Section 609 (repealed by 1988 Cal. Stat. ch. 1199 § 51) without substantive change. Subdivisions (b) and (c) were new provisions. For background on the provisions of this part, see the Comment to this part under the part heading.

§ 8961. Amount of commission and expenses

Comment. Section 8961 continues Section 8961 of the repealed Probate Code without change. The commission provided by this section is subject to a maximum and minimum limitation pursuant to Section 8963.

Background on Section 8961 of Repealed Code

Section 8961 was added by 1988 Cal. Stat. ch. 1199 § 82.5. The section restated a portion of the first sentence and the second sentence of the first paragraph, and the second paragraph, of former Probate Code Section 609 (repealed by 1988 Cal. Stat. ch. 1199 § 51) without substantive change. For background on the provisions of this part, see the Comment to this part under the part heading.

§ 8963. Maximum and minimum commissions

Comment. Section 8963 restates Section 8963 of the repealed Probate Code without substantive change. For general provisions, see Sections 1000-1004 (rules of practice), 1020-1023 (petitions and other papers), 1040-1050 (hearings and orders), 1200-1230 (notice of hearing), 1250-1252 (request for special notice), 1260-1265 (proof of giving of notice).

Background on Section 8963 of Repealed Code

Section 8963 was added by 1988 Cal. Stat. ch. 1199 § 82.5. The section restated a portion of the first sentence of the first paragraph and the third paragraph of former Probate Code Section 609 (repealed by 1988 Cal. Stat. ch. 1199 § 51) with the addition

of the provision for notice in the case of an increase in commission. For background on the provisions of this part, see the Comment to this part under the part heading.

§ 8964. Division of commission between referees

Comment. Section 8964 continues Section 8964 of the repealed Probate Code without change. Each referee is entitled to actual and necessary expenses allowed by the court, regardless of the amount of the commission. The amount of the commission split by the referees may exceed the statutory maximum in a case where the court determines that the reasonable value of the services in the case exceeds the statutory amount. See Section 8963(b).

Background on Section 8964 of Repealed Code

Section 8964 was added by 1988 Cal. Stat. ch. 1199 § 82.5. The section restated former Probate Code Section 609.5 (repealed by 1988 Cal. Stat. ch. 1199 § 51) without substantive change. Reference to division of expenses was omitted, since each referee is entitled to actual and necessary expenses allowed by the court, regardless of the amount of the commission. For background on the provisions of this part, see the Comment to this part under the part heading.

Article 5. Transitional Provision

§ 8980. Transitional provision

Comment. Section 8980 continues Section 8980 of the repealed Probate Code without change. This section is an exception to the general rule that all provisions of this part applied immediately on its operative date (July 1, 1989) to pending proceedings. See Section 3.

Background on Section 8980 of Repealed Code

Section 8980 was a new provision added by 1988 Cal. Stat. ch. 1199 § 82.5. For background on the provisions of this part, see the Comment to this part under the part heading.

PART 4. CREDITOR CLAIMS

Comment. This part supersedes Part 4 (commencing with Section 9000) of Division 7 of the repealed Probate Code. The superseded part was enacted upon recommendation of the California Law Revision Commission. See *Recommendation Relating to Creditor Claims Against Decedent's Estate,* 19 Cal. L. Revision Comm'n Reports 299 (1988); *Communication from California Law Revision Commission Concerning Assembly Bill 708,* 19 Cal. L. Revision Comm'n Reports 545, 562-66 (1988).

CHAPTER 1. GENERAL PROVISIONS

§ 9000. "Claim" defined

Comment. Section 9000 continues Section 9000 of the repealed Probate Code without change. A claim not filed as provided in this part is barred. See Section 9002 (claim requirement).

Subdivision (a)(1) uses language drawn from a portion of Section 1-201(4) of the Uniform Probate Code (1987). As to the construction of provisions drawn from uniform acts, see Section 2.

A claim for a tax liability is required only as to liabilities incurred by the decedent up until the time of death, regardless whether the actual assessment for the tax liability was made before or after the time of death. See subdivision (a)(2) of Section 9000 and Chapter 5 (commencing with Section 9200) (claims by public entities). Liabilities for estate and gift taxes are not subject to claim requirements, these liabilities being liabilities arising after death. Secured property taxes and assessments, whether incurred before or after death, are not subject to claim requirements. See subdivision (a)(2).

While the term "claim" does not include administration expenses such as compensation of the personal representative and the estate attorney, it does include funeral expenses under subdivision (a)(3).

A claim need not be filed in the case of foreclosure of a lien on property in the decedent's estate. See Section 9391 (enforcement of security interest). With regard to title to property, see Sections 9860-9868 (conveyance or transfer of property claimed to belong to decedent or other person).

This part does not apply to any proceeding for the administration of a decedent's estate commenced before July 1, 1988. See Section 9004. As to the application of any amendments made after that date, see Section 3.

Background on Section 9000 of Repealed Code

Section 9000 was a new provision added by 1987 Cal. Stat. ch. 923 § 93. The section was drawn from former Probate Code Section 707 (repealed by 1988 Cal. Stat. ch. 1199 § 53) and Section 1-201(4) of the Uniform Probate Code (1987). As to the construction of provisions drawn from uniform acts, see Section 2. For background on the provisions of this part, see the Comment to this part under the part heading.

Subdivision (a)(1) of Section 9000 defined "claim" broadly to include all claims against the decedent whether in "contract, tort, or otherwise." The phrase "tort, or otherwise" included but was broader than the scope of the following language of former Section 707: "all claims for damages for injuries to, or death of, a person or injury to property and all claims against the executor or administrator of any testator or intestate who in his or her lifetime has wasted, destroyed, taken or carried away or converted to his or her own use, the property of another person or committed any trespass on the real property of another person."

Subdivision (a)(2) restated subdivision (c) of former Probate Code Section 707.5 (repealed by 1987 Cal. Stat. ch. 923 § 37), with clarifying changes relating to tax liability of the decedent.

Subdivision (a)(3) restated a provision of subdivision (a) of former Section 707 (repealed by 1988 Cal. Stat. ch. 1199 § 53) without substantive change.

§ 9001. Notice to creditors

Comment. Section 9001 continues Section 9001 of the repealed Probate Code without change. This part does not apply to any

proceeding for the administration of a decedent's estate commenced before July 1, 1988. See Section 9004. As to the application of any amendments made after that date, see Section 3.

Background on Section 9001 of Repealed Code

Section 9001 was added by 1987 Cal. Stat. ch. 923 § 93. Subdivision (a) restated the first portion of former Probate Code Section 700 (repealed by 1987 Cal. Stat. ch. 923 § 37), with the addition of the reference to notice to creditors under Chapter 2 (commencing with Section 9050). Subdivision (b) was new. For background on the provisions of this part, see the Comment to this part under the part heading. The section was amended by 1988 Cal. Stat. ch. 1199 § 83. The 1988 amendment corrected a section reference. See *Comments to Conforming Revisions and Repeals*, 19 Cal. L. Revision Comm'n Reports 1031, 1091 (1988).

§ 9002. Claim requirement

Comment. Section 9002 continues Section 9002 of the repealed Probate Code without change. This section applies to all claims, whether due, not due, or contingent, and whether liquidated or unliquidated, and whether in contract, tort, or otherwise, including claims for funeral expenses. See Section 9000 ("claim" defined) and the Comment thereto. The requirement that a claim be filed as provided in this part is subject to exception under other provisions. See Section 9154 (waiver of formal defects). See also Sections 9390 (claim covered by insurance), 9391 (enforcement of security interest). This part does not apply to any proceeding for the administration of a decedent's estate commenced before July 1, 1988. See Section 9004. As to the application of any amendments made after that date, see Section 3.

Background on Section 9002 of Repealed Code

Section 9002 was added by 1987 Cal. Stat. ch. 923 § 93. Subdivision (a) restated a portion of the first sentence of subdivision (a) of former Probate Code Section 707 (repealed by 1987 Cal. Stat. ch. 923 § 37) without substantive change. Subdivision (b) restated a portion of the second sentence of subdivision (a) of former Section 707 without substantive change. Subdivision (c) restated subdivision (a) of former Probate Code Section 716 (repealed by 1988 Cal. Stat. ch. 1199 § 53) without substantive change. For background on the provisions of this part, see the Comment to this part under the part heading. The section was amended by 1988 Cal. Stat. ch. 1199 § 83.5 to delete subdivision (c) which was superseded by Chapter 8 (commencing with Section 9350) (claims in litigation). See *Comments to Conforming Revisions and Repeals*, 19 Cal. L. Revision Comm'n Reports 1031, 1091 (1988).

§ 9003. Payment of claims

Comment. Section 9003 continues Section 9003 of the repealed Probate Code without change. For payment of debts, see Part 9 (commencing with Section 11400). See also Section 11421 (immediate payment of priority debts). This part does not apply to any proceeding for the administration of a decedent's estate commenced before July 1,

1988. See Section 9004. As to the application of any amendments made after that date, see Section 3.

Background on Section 9003 of Repealed Code

Section 9003 was added by 1987 Cal. Stat. ch. 923 § 93. The section restated the first portion of the first sentence of former Probate Code Section 713 (repealed by 1987 Cal. Stat. ch. 923 § 37) without substantive change. For background on the provisions of this part, see the Comment to this part under the part heading.

§ 9004. Application of part

Comment. Section 9004 continues Section 9004 of the repealed Probate Code without substantive change.

Background on Section 9004 of Repealed Code

Section 9004 was a new provision added by 1987 Cal. Stat. ch. 923 § 93. For background on the provisions of this part, see the Comment to this part under the part heading.

CHAPTER 2. NOTICE TO CREDITORS

§ 9050. Notice required

Comment. Section 9050 continues Section 9050 of the repealed Probate Code without substantive change. This section is designed to satisfy due process requirements by ensuring reasonable notice to creditors within the practicalities of administration of the estate of a decedent. Notice may be given either by mail or personal delivery. See Sections 1215-1216. See also Sections 52 ("letters" defined), 58 (meaning of "general personal representative").

The personal representative is not required to make a search for possible creditors under this section. See Section 9053(d). The personal representative is required only to notify creditors who are actually known to the personal representative either because information comes to the attention of the personal representative in the course of administration or because the creditor has demanded payment during administration. Information received by the personal representative may be written or oral; but actual, as opposed to constructive, knowledge is required before a duty to give notice is imposed on the personal representative. The personal representative is protected by statute from a failure to give notice unless the failure is in bad faith. See Section 9053(b). However, the personal representative may not willfully ignore information that would likely impart knowledge of a creditor. For example, the personal representative may not refuse to inspect a file of the decedent marked "unpaid bills" of which the personal representative is aware. Inferences and presumptions may be available to demonstrate the personal representative's knowledge.

The personal representative is not required to notify persons who are potentially creditors because of possible liability of the decedent, but only creditors who have made their claims known. In a case where there is doubt whether notice to a particular person is required under this standard, the personal representative should give notice. The personal representative is protected from liability in this event. See Section 9053(a).

The purpose of the notice is to alert creditors to the need to file a formal claim. For this reason, the personal representative need not give notice to a creditor who has already filed a formal claim or to a creditor whose demand for payment the personal representative elects to allow as a claim notwithstanding the creditor's failure to comply with formal claim requirements. See Section 9054 (when notice not required).

This part does not apply to any proceeding for the administration of a decedent's estate commenced before July 1, 1988. See Section 9004. As to the application of any amendments made after that date, see Section 3.

Background on Section 9050 of Repealed Code

Section 9050 was a new provision added by 1987 Cal. Stat. ch. 923 § 93. For background on the provisions of this part, see the Comment to this part under the part heading. The section was amended by 1988 Cal. Stat. ch. 1199 § 84 to correct a section reference. See *Comments to Conforming Revisions and Repeals*, 19 Cal. L. Revision Comm'n Reports 1031, 1091 (1988).

§ 9051. Time of notice

Comment. Section 9051 continues Section 9051 of the repealed Probate Code without substantive change. Failure of the personal representative to give notice within the time required by Section 9051 does not preclude a creditor from filing a claim within the time provided in Section 9100 (claim period). This part does not apply to any proceeding for the administration of a decedent's estate commenced before July 1, 1988. See Section 9004. As to the application of any amendments made after that date, see Section 3. See also Sections 52 ("letters" defined), 58 (meaning of "general personal representative").

Background on Section 9051 of Repealed Code

Section 9051 was a new provision added by 1987 Cal. Stat. ch. 923 § 93. For background on the provisions of this part, see the Comment to this part under the part heading.

§ 9052. Form of notice

Comment. Section 9052 continues Section 9052 of the repealed Probate Code without substantive change. This section prescribes the form of notice given to creditors. The Judicial Council may adopt a different form. See Section 1001. This part does not apply to any proceeding for the administration of a decedent's estate commenced

before July 1, 1988. See Section 9004. As to the application of any amendments made after that date, see Section 3.

Background on Section 9052 of Repealed Code

Section 9052 was a new provision added by 1987 Cal. Stat. ch. 923 § 93. For background on the provisions of this part, see the Comment to this part under the part heading. The section was amended by 1988 Cal. Stat. ch. 113 § 15. The 1988 amendment revised the section for clarity.

§ 9053. Immunity of personal representative

Comment. Section 9053 continues Section 9053 of the repealed Probate Code without change. Subdivision (a) is intended to encourage full and adequate notice in cases where it is a close question whether a personal representative has actual knowledge of a creditor within the meaning of Section 9050. If, for example, the personal representative believes that notice may be required and if the notice given generates claims or litigation that would not otherwise have arisen, Section 9053 immunizes the personal representative from liability even though notice turns out not to have been legally required.

Subdivision (b) protects the personal representative from liability for a failure to give notice to a creditor, unless the creditor establishes that the failure was in bad faith and satisfies the other requirements of the subdivision. As provided in subdivision (c), the remedy, if any, of a creditor who suffers loss as a result of a good-faith or inadvertent failure to give notice is against the estate and not against the personal representative.

Subdivision (d) implements the principle that the personal representative need not make a special search for creditors, but must only notify those who come to the attention of the personal representative during the course of administration. See Section 9050 (notice required). However, subdivision (d) does not authorize the personal representative willfully to ignore information that would likely impart knowledge of a creditor. Evidentiary inferences and presumptions may be available to prove knowledge of the personal representative in a disputed case.

This part does not apply to any proceeding for the administration of a decedent's estate commenced before July 1, 1988. See Section 9004. As to the application of any amendments made after that date, see Section 3.

Background on Section 9053 of Repealed Code

Section 9053 was a new provision added by 1987 Cal. Stat. ch. 923 § 93. For background on the provisions of this part, see the Comment to this part under the part heading. The section was amended by 1989 Cal. Stat. ch. 544 § 9.5. The amendment made clear that the burden of proof of bad faith of the personal representative is on the person seeking to impose liability and to state the conditions necessary to impose liability. The amendment also deleted references to the attorney for the personal representative since the chapter imposes no duty on the attorney to give notice.

§ 9054. When notice not required

Comment. Section 9054 continues Section 9054 of the repealed Probate Code without change. This section eliminates the need for notice to a creditor who has filed a satisfactory claim in the administration proceeding. The personal representative may waive formal defects in a demand for payment made during the four-month claim period and accept the demand as a statutory claim, thereby avoiding the need for additional notice to the creditor. See Section 9154 (waiver of formal defects). This part does not apply to any proceeding for the administration of a decedent's estate commenced before July 1, 1988. See Section 9004. As to the application of any amendments made after that date, see Section 3.

Background on Section 9054 of Repealed Code

Section 9054 was a new provision added by 1987 Cal. Stat. ch. 923 § 93. For background on the provisions of this part, see the Comment to this part under the part heading.

CHAPTER 3. TIME FOR FILING CLAIMS

§ 9100. Claim period

Comment. Section 9100 continues Section 9100 of the repealed Probate Code with a revision in subdivision (b) that makes clear that a reference in another statute to the time for filing claims means a time that expires four months after the date letters are first issued to a general personal representative. If letters are issued by more than one court or if subsequent letters are issued by the same court, the four-month period of paragraph (1) of subdivision (a) commences on the first issuance of letters to a general personal representative. In the case of a special administrator granted the powers of a general personal representative, the claim period commences to run on first issuance of letters reciting the general powers of the special administrator. See Sections 52 ("letters" defined), 58 (meaning of "general personal representative"). This part does not apply to any proceeding for the administration of a decedent's estate commenced before July 1, 1988. See Section 9004. As to the application of any amendments made after that date, see Section 3.

Background on Section 9100 of Repealed Code

Section 9100 was added by 1987 Cal. Stat. ch. 923 § 93. The section superseded the last portion of subdivision (a) and all of subdivision (c) of former Probate Code Section 700 (repealed by 1987 Cal. Stat. ch. 923 § 37). For background on the provisions of this part, see the Comment to this part under the part heading.

§ 9101. Time not extended by vacancy in office

Comment. Section 9101 continues Section 9101 of the repealed Probate Code without change. A vacancy includes the resignation, death,

or removal of the personal representative from office. See Section 8520. This part does not apply to any proceeding for the administration of a decedent's estate commenced before July 1, 1988. See Section 9004. As to the application of any amendments made after that date, see Section 3.

Background on Section 9101 of Repealed Code

Section 9101 was added by 1987 Cal. Stat. ch. 923 § 93. The section restated subdivision (b) of former Probate Code Section 700 (repealed by 1987 Cal. Stat. ch. 923 § 37) without substantive change. For background on the provisions of this part, see the Comment to this part under the part heading.

§ 9102. Where personal representative acts on claim after expiration of time

Comment. Section 9102 continues Section 9102 of the repealed Probate Code without change. This part does not apply to any proceeding for the administration of a decedent's estate commenced before July 1, 1988. See Section 9004. As to the application of any amendments made after that date, see Section 3.

Background on Section 9102 of Repealed Code

Section 9102 was added by 1987 Cal. Stat. ch. 923 § 93. The section restated the last sentence of former Probate Code Section 712 (repealed by 1987 Cal. Stat. ch. 923 § 37) without substantive change. For background on the provisions of this part, see the Comment to this part under the part heading.

§ 9103. Late claims

Comment. Section 9103 continues Section 9103 of the repealed Probate Code with clarifying revisions in paragraphs (1) and (2) of subdivision (a) and in subdivisions (d) and (e). For general provisions, see Sections 1000-1004 (rules of practice), 1020-1023 (petitions and other papers), 1040-1050 (hearings and orders), 1200-1230 (notice of hearing), 1250-1252 (request for special notice), 1260-1265 (proof of giving of notice). See also Sections 52 ("letters" defined), 58 (meaning of "general personal representative").

This section does not excuse the duty of the personal representative to give timely notice to a known creditor pursuant to Chapter 2 (commencing with Section 9050). A creditor has knowledge of the administration of an estate within the meaning of subdivision (a)(1) of Section 9103 if the creditor has actual knowledge of the administration through receipt of notice given under Section 9050 or otherwise, such as information from a newspaper clipping service that comes to the attention of the creditor. Constructive knowledge through publication of a notice of death or other information that does not come to the attention of the creditor is not knowledge for the purpose of subdivision (a)(1). The standard applicable to the creditor's attorney is different. The creditor is not held responsible for any actual knowledge the attorney may have of

the decedent's death unless the attorney is representing the creditor in the matter involving the decedent.

This section does not apply to certain public entity claims which involve a written notice or request to the public entity and a response time governed by other law. See Sections 9201 (claims governed by special statutes), 9202 (claim by Director of Health Services).

This part does not apply to any proceeding for the administration of a decedent's estate commenced before July 1, 1988. See Section 9004. As to the application of any amendments made after that date, see Section 3.

Background on Section 9103 of Repealed Code

Section 9103 was added by 1987 Cal. Stat. ch. 923 § 93. The section superseded the second, third, and fourth sentences of subdivision (a) of former Probate Code Section 707 (repealed by 1987 Cal. Stat. ch. 923 § 37). For background on the provisions of this part, see the Comment to this part under the part heading.

Section 9103 was amended by 1988 Cal. Stat. ch. 113 § 15.1 to eliminate the requirement that the creditor establish the existence of the required conditions by "clear and convincing evidence." See *Communication from the California Law Revision Commission Concerning Assembly Bill 2779*, 19 Cal. L. Revision Comm'n Reports 1191, 1194 (1988). See also *Comments to Conforming Revisions and Repeals*, 19 Cal. L. Revision Comm'n Reports 1031, 1091-92 (1988).

Section 9103 was again amended by 1988 Cal. Stat. ch. 1199 § 84.5 to combine the section with the fourth sentence of the first paragraph and the second and third paragraphs of former Probate Code Section 709 (repealed by 1988 Cal. Stat. ch. 1199 § 53), which related to late claims in pending actions, and with former Probate Code Section 720 (repealed by 1988 Cal. Stat. ch. 1199 § 53), which related to late claims involving causes of action not pending. This combination of provisions resulted in changes for purposes of clarification, generalization, and uniformity. The amendment also added paragraph (2) of subdivision (a) to Section 9103. This paragraph was a new provision. See *Communication from the California Law Revision Commission Concerning Assembly Bill 2841*, 19 Cal. L. Revision Comm'n Reports 1201, 1238-39 (1988).

§ 9104. Amended or revised claim

Comment. Section 9104 continues Section 9104 of the repealed Probate Code without substantive change. A claim is timely if filed within the time prescribed by Section 9100 or allowed by the court under Section 9103. A sentence is added to subdivision (b) to codify a statement in the Comment to Section 9104 of the repealed Probate Code. This addition is not a substantive change.

If letters are issued by more than one court or if subsequent letters are issued by the same court, the one year amendment or revision period commences on the first issuance of letters to a general personal representative. In the case of a special administrator granted the powers of a general personal representative, the period commences to run on first issuance of letters reciting the general powers of the special

administrator. See Sections 52 ("letters" defined), 58 (meaning of "general personal representative").

This part does not apply to any proceeding for the administration of a decedent's estate commenced before July 1, 1988. See Section 9004. As to the application of any amendments made after that date, see Section 3.

Background on Section 9104 of Repealed Code

Section 9104 was a new provision added by 1987 Cal. Stat. ch. 923 § 93. For background on the provisions of this part, see the Comment to this part under the part heading.

CHAPTER 4. FILING OF CLAIMS

§ 9150. How claim is filed

Comment. Section 9150 continues Section 9150 of the repealed Probate Code without change. A person acting on behalf of the creditor may include the personal representative of the estate of the creditor or the guardian or conservator of the estate of the creditor.

Under Section 9150, if the claimant mails a copy of the claim to the personal representative but fails to file it with the court, the claim is not properly filed. Thus the holding in Estate of Schweitzer, 182 Cal. App. 3d 330, 227 Cal. Rptr. 11 (1986) (sending settlement agreement to executor's attorney was sufficient), is no longer good law. However, the requirement that the claim be filed with the court does not preclude application of estoppel or other equitable doctrines in an appropriate case. See Section 9154(b). See also Section 9154(a) (waiver of formal defects). When a claim is filed with the court, the court clerk must accept it as filed and may not reject it for formal defects. For general provisions relating to mailing, see Sections 1215-1217.

This part does not apply to any proceeding for the administration of a decedent's estate commenced before July 1, 1988. See Section 9004. As to the application of any amendments made after that date, see Section 3.

Background on Section 9150 of Repealed Code

Section 9150 was added by 1987 Cal. Stat. ch. 923 § 93. Subdivision (a) of Section 9150 generalized a provision of the first sentence of former Probate Code Section 704.2 (repealed by 1987 Cal. Stat. ch. 923 § 37).

Subdivision (b) of Section 9150 superseded subdivision (a) of former Probate Code Section 700 (repealed by 1987 Cal. Stat. ch. 923 § 37). Under former Section 700, the creditor was required either to file the claim with the court or to present it to the personal representative. Section 9150 required the claim to be filed with the court and a copy to be mailed to the personal representative. See also new Section 9153 (form of claim).

For background on the provisions of this part, see the Comment to this part under the part heading.

§ 9151. Documentary support of claim

Comment. Section 9151 continues Section 9151 of the repealed Probate Code without substantive change. The claim may be supported by a declaration under penalty of perjury in lieu of an affidavit. See Code Civ. Proc. § 2015.5. The affidavit may be made on information and belief. Cf. Code Civ. Proc. § 446. A person acting on behalf of the creditor may include the personal representative of the estate of the creditor or the guardian or conservator of the estate of the creditor. As to a claim barred by the statute of limitations, see Section 9253. This part does not apply to any proceeding for the administration of a decedent's estate commenced before July 1, 1988. See Section 9004. As to the application of any amendments made after that date, see Section 3.

Background on Section 9151 of Repealed Code

Section 9151 was added by 1987 Cal. Stat. ch. 923 § 93. The section restated former Probate Code Section 705 (repealed by 1987 Cal. Stat. ch. 923 § 37) without substantive change. For background on the provisions of this part, see the Comment to this part under the part heading.

§ 9152. Claim based on written instrument

Comment. Section 9152 continues Section 9152 of the repealed Probate Code without substantive change. A creditor need not file a claim in order to enforce a secured obligation against the security if recourse against other property in the estate is waived. See Section 9391 (enforcement of security interest). This part does not apply to any proceeding for the administration of a decedent's estate commenced before July 1, 1988. See Section 9004. As to the application of any amendments made after that date, see Section 3.

Background on Section 9152 of Repealed Code

Section 9152 was added by 1987 Cal. Stat. ch. 923 § 93. The section restated former Probate Code Section 706 (repealed by 1987 Cal. Stat. ch. 923 § 37) without substantive change. For background on the provisions of this part, see the Comment to this part under the part heading.

§ 9153. Form for claim

Comment. Section 9153 continues Section 9153 of the repealed Probate Code with the omission of subdivision (a) of Section 9153 of the repealed Probate Code. That subdivision, which gave the Judicial Council authority to prescribe forms, was unnecessary in view of Section 1001(b), a general provision that gives the Judicial Council authority to prescribe forms. This part does not apply to any proceeding for the administration of a decedent's estate commenced before July 1, 1988. See Section 9004. As to the application of any amendments made after that date, see Section 3.

Background on Section 9153 of Repealed Code

Section 9153 was a new provision added by 1987 Cal. Stat. ch. 923 § 93. For background on the provisions of this part, see the Comment to this part under the part heading.

§ 9154. Waiver of formal defects

Comment. Section 9154 continues Section 9154 of the repealed Probate Code without substantive change. Subdivision (a) authorizes the personal representative to waive technical claim requirements, such as the form and manner of filing a claim, in appropriate cases. This may be useful, for example, for regular bills received by the personal representative in the ordinary course of business concerning which there is no dispute. This authority enables the personal representative to avoid the need for additional notice to the creditor. See Section 9054 (when notice not required). For approval of the personal representative's account where payment is made without prior court order, see Sections 11005 (settlement of account), 11422 (payment of debts on court order). See also Sections 52 ("letters" defined), 58 (meaning of "general personal representative"). As to a claim barred by the statute of limitations, see Section 9253.

Subdivision (b) recognizes expressly equitable principles that might permit payment of an informal claim notwithstanding a failure to satisfy all requirements of subdivision (a). Under the facts in Estate of Sturm, 201 Cal. App. 3d 14, 246 Cal. Rptr. 852 (1988), for example, recognition and partial payment of the debt by the personal representative within the four-month and thirty-day limitation of subdivision (a) could serve as an equitable basis for allowing completion of payments beyond that period.

This part does not apply to any proceeding for the administration of a decedent's estate commenced before July 1, 1988. See Section 9004. As to the application of any amendments made after that date, see Section 3.

Background on Section 9154 of Repealed Code

Section 9154 was added by 1987 Cal. Stat. ch. 923 § 93. Section 9154 was drawn from former Probate Code Section 929 (repealed by 1988 Cal. Stat. ch. 1199 § 54.5) (accounts). For background on the provisions of this part, see the Comment to this part under the part heading. Section 9154 was amended by 1989 Cal. Stat. ch. 21 § 21 to add subdivision (b). See *Communication from the California Law Revision Commission Concerning Assembly Bill 156*, 20 Cal. L. Revision Comm'n Reports 227, 230-31 (1990).

CHAPTER 5. CLAIMS BY PUBLIC ENTITIES

§ 9200. Claim by public entity required

Comment. Section 9200 continues Section 9200 of the repealed Probate Code without change. "Public entity" is defined in Government Code Section 811.2 to include the State, the Regents of the University of

California, a county, city, district, public authority, public agency, and any other political subdivision or public corporation in the State. This section does not govern obligations owed to the United States which are governed by federal law. This part does not apply to any proceeding for the administration of a decedent's estate commenced before July 1, 1988. See Section 9004. As to the application of any amendments made after that date, see Section 3.

Background on Section 9200 of Repealed Code

Section 9200 was added by 1987 Cal. Stat. ch. 923 § 93. The section restated subdivision (a) of former Probate Code Section 707.5 (repealed by 1987 Cal. Stat. ch. 923 § 37), with the addition of the reference to an authorized officer. See, e.g., Section 9202 (claim by Director of Health Services). For background on the provisions of this part, see the Comment to this part under the part heading.

§ 9201. Claims governed by special statutes

Comment. Section 9201 continues Section 9201 of the repealed Probate Code without substantive change. This section makes explicit the authority of the public entity to use an appropriate form for efficient administration of the relevant law under which collection is sought, notwithstanding Section 9052 (form of notice). Section 9201 also makes explicit the authority of the public entity to use available statutory remedies to enforce the liability where it has not been given notice of estate administration. This part does not apply to any proceeding for the administration of a decedent's estate commenced before July 1, 1988. See Section 9004. As to the application of any amendments made after that date, see Section 3.

Background on Section 9201 of Repealed Code

Section 9201 was added by 1987 Cal. Stat. ch. 923 § 93. The section restated subdivision (b) of former Probate Code Section 707.5 and a portion of the first sentence of subdivision (a) of former Probate Code Section 700.1 (provisions repealed by 1987 Cal. Stat. ch. 923 § 37). For background on the provisions of this part, see the Comment to this part under the part heading.

§ 9202. Claim by Director of Health Services

Comment. Section 9202 continues Section 9202 of the repealed Probate Code without change. This part does not apply to any proceeding for the administration of a decedent's estate commenced before July 1, 1988. See Section 9004. As to the application of any amendments made after that date, see Section 3. See also Sections 52 ("letters" defined), 58 (meaning of "general personal representative"). Section 215 requires that a report of death be made to the Director of Health Services by the estate attorney (or if no estate attorney, by the beneficiary, the personal representative, or the person in possession of property of the decedent) where the decedent received or may have

received health care under the provisions of Chapter 7 (commencing with Section 14000) or Chapter 8 (commencing with Section 14200) of Part 3 of Division 9 of the Welfare and Institutions Code.

Background on Section 9202 of Repealed Code

Section 9202 was added by 1987 Cal. Stat. ch. 923 § 93. The section restated the first sentence of subdivision (a), all of subdivision (b), and the first sentence of subdivision (c) of former Probate Code Section 700.1 (repealed by 1987 Cal. Stat. ch. 923 § 37), except that notice by beneficiaries and persons in possession of the decedent's property was omitted from Section 9202. For notice by these persons, see Section 215 (report to Director of Health Services). Under Section 9202, the time within which the notice must be made to the Director of Health Services was made to run from the date of issuance of letters rather than from the date of death as was provided in former Section 700.1. For background on the provisions of this part, see the Comment to this part under the part heading.

§ 9203. Distribution before claim

Comment. Section 9203 continues Section 9203 of the repealed Probate Code without substantive change. This part does not apply to any proceeding for the administration of a decedent's estate commenced before July 1, 1988. See Section 9004. As to the application of any amendments made after that date, see Section 3.

Background on Section 9203 of Repealed Code

Section 9203 was added by 1987 Cal. Stat. ch. 923 § 93. The section restated the second and third sentences of subdivision (c) and all of subdivision (d) of former Probate Code Section 700.1 (repealed by 1987 Cal. Stat. ch. 923 § 37), and generalized them to apply to all public entities. For background on the provisions of this part, see the Comment to this part under the part heading.

§ 9204. Priority of claims not affected by chapter

Comment. Section 9204 continues Section 9204 of the repealed Probate Code without change. This part does not apply to any proceeding for the administration of a decedent's estate commenced before July 1, 1988. See Section 9004. As to the application of any amendments made after that date, see Section 3.

Background on Section 9204 of Repealed Code

Section 9204 was added by 1987 Cal. Stat. ch. 923 § 93. The section restated subdivision (d) of former Probate Code Section 707.5 (repealed by 1987 Cal. Stat. ch. 923 § 37) without substantive change. For background on the provisions of this part, see the Comment to this part under the part heading.

§ 9205. Limitation on application of chapter

Comment. Section 9205 continues Section 9205 of the repealed Probate Code without change. This part does not apply to any proceeding for the administration of a decedent's estate commenced before July 1, 1988. See Section 9004. As to the application of any amendments made after that date, see Section 3.

Background on Section 9205 of Repealed Code

Section 9205 was added by 1987 Cal. Stat. ch. 923 § 93. The section restated subdivision (e) of former Probate Code Section 707.5 (repealed by 1987 Cal. Stat. ch. 923 § 37), omitting the reference to a "claim," which is included in "representation." For background on the provisions of this part, see the Comment to this part under the part heading.

CHAPTER 6. ALLOWANCE AND REJECTION OF CLAIMS

§ 9250. Procedure by personal representative

Comment. Section 9250 continues Section 9250 of the repealed Probate Code without substantive change. See also Section 9807 (payment of established claim where resort to security insufficient to pay claim).

Under the Independent Administration of Estates Act, the personal representative may allow, pay, reject, contest, or compromise any claim without court supervision. Section 10552 (acting on claims against estate). However, court supervision is necessary where the personal representative or the attorney for the personal representative is the creditor. See Section 9252.

This part does not apply to any proceeding for the administration of a decedent's estate commenced before July 1, 1988. See Section 9004. As to the application of any amendments made after that date, see Section 3.

Background on Section 9250 of Repealed Code

Section 9250 was added by 1987 Cal. Stat. ch. 923 § 93. The section superseded the third sentence of former Probate Code Section 710, the first sentence of former Probate Code Section 711, and the first sentence of former Probate Code Section 714 (provisions repealed by 1987 Cal. Stat. ch. 923 § 37). For background on the provisions of this part, see the Comment to this part under the part heading. Subdivision (e) was added to the section by 1989 Cal. Stat. ch. 21 § 22 to make clear that an informally paid claim under Section 9154 (waiver of formal defects) is not subject to the requirements of the section. See *Communication from the California Law Revision Commission Concerning Assembly Bill 156*, 20 Cal. L. Revision Comm'n Reports 227, 231 (1990).

§ 9251. Procedure by court

Comment. Section 9251 continues Section 9251 of the repealed Probate Code without substantive change. This part does not apply to any proceeding for the administration of a decedent's estate commenced before July 1, 1988. See Section 9004. As to the application of any amendments made after that date, see Section 3.

Background on Section 9251 of Repealed Code

Section 9251 was added by 1987 Cal. Stat. ch. 923 § 93. The section superseded the second sentence of former Probate Code Section 708, the last two sentences of former Probate Code Section 710, the second sentence of former Probate Code Section 711,

and the second sentence of former Probate Code Section 713 (provisions repealed by 1987 Cal. Stat. ch. 923 § 37). For background on the provisions of this part, see the Comment to this part under the part heading.

§ 9252. Where personal representative is creditor

Comment. Section 9252 continues Section 9252 of the repealed Probate Code without change. For general provisions, see Sections 1000-1004 (rules of practice), 1020-1023 (petitions and other papers), 1040-1050 (hearings and orders), 1200-1230 (notice of hearing), 1250-1252 (request for special notice), 1260-1265 (proof of giving of notice).

An approved claim is paid as other claims in the course of administration. If the personal representative or attorney fails to recover in an action on the claim, the personal representative or attorney must pay costs, and may be required to pay reasonable litigation expenses, including attorney's fees. See Section 9354 (action on rejected claim). This part does not apply to any proceeding for the administration of a decedent's estate commenced before July 1, 1988. See Section 9004. As to the application of any amendments made after that date, see Section 3.

Background on Section 9252 of Repealed Code

Section 9252 was added by 1987 Cal. Stat. ch. 923 § 93. The section restated former Probate Code Section 703 (repealed by 1987 Cal. Stat. ch. 923 § 37), expanding it to cover the personal representative's attorney and adding the second sentence of subdivision (a) of Section 9252 giving the court authority to require a noticed hearing. For background on the provisions of this part, see the Comment to this part under the part heading.

§ 9253. Effect of statute of limitations

Comment. Section 9253 continues Section 9253 of the repealed Probate Code without change. See also Sections 9350-9354 (tolling of statute of limitations; action on rejected claim). This part does not apply to any proceeding for the administration of a decedent's estate commenced before July 1, 1988. See Section 9004. As to the application of any amendments made after that date, see Section 3.

Background on Section 9253 of Repealed Code

Section 9253 was added by 1987 Cal. Stat. ch. 923 § 93. Subdivisions (a) and (d) were new. Subdivisions (b) and (c) restated the first and third sentences of former Probate Code Section 708 (repealed by 1987 Cal. Stat. ch. 923 § 37) without substantive change. For background on the provisions of this part, see the Comment to this part under the part heading.

Section 9253 was amended by 1988 Cal. Stat. ch. 1199 § 85 to delete all of Section 9253 except former subdivision (b) which was continued as Section 9253 of the repealed Probate Code without change. Former subdivisions (a) and (c) were restated in Section 9352 of the repealed Probate Code (tolling of statute of limitations) without substantive change. Former subdivision (d) was combined with subdivision (a) of Section 9257 of the repealed Probate Code and restated in Section 9353 of the repealed

Probate Code (bar of rejected claims) without substantive change. See *Comments to Conforming Revisions and Repeals*, 19 Cal. L. Revision Comm'n Reports 1031, 1092 (1988).

§ 9254. Contest of allowed and approved claims

Comment. Section 9254 continues Section 9254 of the repealed Probate Code without substantive change. See also Section 48 ("interested person" defined). For claims established by judgments, see Chapter 7 (commencing with Section 9300). See also Section 9807 (payment of established claim where resort to security insufficient to pay claim). This part does not apply to any proceeding for the administration of a decedent's estate commenced before July 1, 1988. See Section 9004. As to the application of any amendments made after that date, see Section 3.

Background on Section 9254 of Repealed Code

Section 9254 was added by 1987 Cal. Stat. ch. 923 § 93. The section restated a portion of the first sentence of former Probate Code Section 713 (repealed by 1987 Cal. Stat. ch. 923 § 37), with the addition of the provision relating to burdens of proof. For background on the provisions of this part, see the Comment to this part under the part heading.

§ 9255. Partial allowance

Comment. Section 9255 continues Section 9255 of the repealed Probate Code without change. As to a claim barred by the statute of limitations, see Section 9253. This part does not apply to any proceeding for the administration of a decedent's estate commenced before July 1, 1988. See Section 9004. As to the application of any amendments made after that date, see Section 3.

Background on Section 9255 of Repealed Code

Section 9255 was added by 1987 Cal. Stat. ch. 923 § 93. The section restated former Probate Code Section 717 (repealed by 1987 Cal. Stat. ch. 923 § 37) without substantive change. For background on the provisions of this part, see the Comment to this part under the part heading. Section 9255 was amended by 1988 Cal. Stat. ch. 1199 § 85.3 to correct a section reference. See *Communication from the California Law Revision Commission Concerning Assembly Bill 2841*, 19 Cal. L. Revision Comm'n Reports 1201, 1239 (1988).

§ 9256. Failure of personal representative or court to act

Comment. Section 9256 continues Section 9256 of the repealed Probate Code without change. This part does not apply to any proceeding for the administration of a decedent's estate commenced before July 1, 1988. See Section 9004.

Background on Section 9256 of Repealed Code

Section 9256 was added by 1987 Cal. Stat. ch. 923 § 93. The section superseded the first sentence of former Probate Code Section 712 (repealed by 1987 Cal. Stat. ch. 923 § 37). Section 9256 substituted a 30-day period for the 10-day period formerly

provided in former Section 712. For background on the provisions of this part, see the Comment to this part under the part heading.

CHAPTER 7. CLAIMS ESTABLISHED BY JUDGMENT

Comment. This chapter supersedes Chapter 7 (commencing with Section 9300) of Part 4 of Division 7 of the repealed Probate Code. Provisions included in this chapter of the repealed Probate Code were enacted upon recommendation of the California Law Revision Commission. See *Recommendation Relating to Enforcement of Obligations After Death,* 15 Cal. L. Revision Comm'n Reports 1327 (1980). See also *Recommendation Relating to Creditor Claims Against Decedent's Estate,* 19 Cal. L. Revision Comm'n Reports 299 (1988).

§ 9300. Money judgment against decedent

Comment. Section 9300 continues Section 9300 of the repealed Probate Code without change. See also Code Civ. Proc. § 686.020. For an exception to the rule of Section 9300, see Section 9303 (property under levy of execution). Section 9300 applies to federal as well as state judgments. This part does not apply to any proceeding for the administration of a decedent's estate commenced before July 1, 1988. See Section 9004. As to the application of any amendments made after that date, see Section 3.

Background on Section 9300 of Repealed Code

Section 9300 was added by 1987 Cal. Stat. ch. 923 § 93. The section restated subdivisions (a) and (b) of former Probate Code Section 730 (repealed by 1987 Cal. Stat. ch. 923 § 37) and extended those provisions to all money judgments. For background on the provisions of this chapter, see the Comment to this chapter under the chapter heading.

§ 9301. Money judgment against personal representative

Comment. Section 9301 continues Section 9301 of the repealed Probate Code without change. This part does not apply to any proceeding for the administration of a decedent's estate commenced before July 1, 1988. See Section 9004. As to the application of any amendments made after that date, see Section 3.

Background on Section 9301 of Repealed Code

Section 9301 was added by 1987 Cal. Stat. ch. 923 § 93. The section restated former Probate Code Section 731 (repealed by 1987 Cal. Stat. ch. 923 § 37) without substantive change. For background on the provisions of this chapter, see the Comment to this chapter under the chapter heading.

§ 9302. Enforcement of nonmoney judgment

Comment. Section 9302 continues Section 9302 of the repealed Probate Code without change. The first sentence permits the use of the Enforcement of Judgments Law to enforce an order for sale in a judgment

foreclosing a lien and to enforce other judgments for possession or sale of property. The remainder of the section deals with claims for money in connection with a judgment for possession or sale of property. A judgment for possession of property may include damages and costs which ordinarily would be recovered by levy on other property of the judgment debtor. There may also be accrued costs, interest, and the levying officer's costs in enforcing a judgment for possession, and these also would ordinarily be recovered by the judgment creditor by levy on other property of the judgment debtor. Section 9302 makes clear that, after the death of the judgment debtor, these claims for money cannot be enforced by levy against other property of the decedent; instead, amounts due under a judgment for possession are enforced in the same manner as a money judgment and thus are governed by the general rule applicable to money judgments under Section 9300.

This part does not apply to any proceeding for the administration of a decedent's estate commenced before July 1, 1988. See Section 9004. As to the application of any amendments made after that date, see Section 3.

Background on Section 9302 of Repealed Code

Section 9302 was added by 1987 Cal. Stat. ch. 923 § 93. The section restated subdivision (d) of former Probate Code Section 730 (repealed by 1987 Cal. Stat. ch. 923 § 37) without substantive change. The former reference to unsatisfied demands for money under a judgment for possession was omitted. Amounts due under a judgment for possession are enforced in the same manner as a money judgment and thus are governed by the general rule applicable to money judgments under Section 9300. See Code Civ. Proc. §§ 680.270, 712.040, 714.020. For background on the provisions of this chapter, see the Comment to this chapter under the chapter heading.

§ 9303. Property subject to execution lien

Comment. Section 9303 continues Section 9303 of the repealed Probate Code without change. This part does not apply to any proceeding for the administration of a decedent's estate commenced before July 1, 1988. See Section 9004. As to the application of any amendments made after that date, see Section 3.

Background on Section 9303 of Repealed Code

Section 9303 was added by 1987 Cal. Stat. ch. 923 § 93. The section restated subdivision (c) of former Probate Code Section 730 (repealed by 1987 Cal. Stat. ch. 923 § 37) without substantive change. For background on the provisions of this chapter, see the Comment to this chapter under the chapter heading.

§ 9304. Converting attachment lien to judgment lien

Comment. Section 9304 continues Section 9304 of the repealed Probate Code without substantive change. The reference in subdivision (c) to Section 462.100 has been corrected to refer to Section 482.100.

Section 9304 makes the judgment a lien on the attached property for

the purpose of determining the order of priority for payment of claims against the estate under Section 11420 and for the purpose of permitting foreclosure of the lien under Section 9391.

Under Section 9304, the judgment does not become a lien on property subject to the attachment lien which is not included in the decedent's estate because it was transferred by the decedent; the attachment lien continues on the property transferred and can be enforced after judgment notwithstanding the death of the decedent. Everett v. Hayes, 94 Cal. App. 31, 270 P. 458 (1928).

Subdivision (b) of Section 9304 is comparable to subdivision (c) of Code of Civil Procedure Section 488.510 (extension of attachment lien).

Subdivision (c) of Section 9304 makes clear that after the death of the decedent, an exemption claim may be made by or on behalf of any one or more members of the decedent's family who were supported in whole or in part by the decedent. Subdivision (c) is consistent with Code of Civil Procedure Section 482.100 which permits the defendant to claim an exemption if the right to the exemption is the result of a change in circumstances occurring after (1) the denial of a claim of exemption for the property earlier in the action or (2) the expiration of the time for claiming the exemption earlier in the action. However, a showing of a change in circumstances is not required under subdivision (c), the death of the decedent whose property was attached being considered a sufficient change in circumstances to permit the claim of exemption by or on behalf of the surviving member or members of the decedent's family.

The only limit on the time within which the exemption must be claimed is that the claim must be made prior to the time the abstract and notice are served, recorded, or filed under subdivision (b). The right to the exemption is determined as of the time the claim is made by or on behalf of the surviving member or members of the decedent's family.

The primary purpose of subdivision (c) is to preserve the effect, after the death of the decedent, of the exemption provided by subdivision (b) of Code of Civil Procedure Section 487.020 (property "necessary for the support of [the defendant's family] supported in whole or in part by the defendant"). However, subdivision (c) also permits the claim of any of the other exemptions provided by Section 487.020.

This part does not apply to any proceeding for the administration of a decedent's estate commenced before July 1, 1988. See Section 9004. As to the application of any amendments made after that date, see Section 3.

Background on Section 9304 of Repealed Code

Section 9304 was added by 1987 Cal. Stat. ch. 923 § 93. The section restated former Probate Code Section 732 (repealed by 1987 Cal. Stat. ch. 923 § 37) without

substantive change. For background on the provisions of this chapter, see the Comment to this chapter under the chapter heading.

CHAPTER 8. CLAIMS IN LITIGATION

Comment. This chapter supersedes Chapter 8 (commencing with Section 9350) of Part 4 of Division 7 of the repealed Probate Code. The superseded chapter was enacted upon recommendation of the California Law Revision Commission. See *Recommendation Relating to Litigation Involving Decedents,* 19 Cal. L. Revision Comm'n Reports 899 (1988). See also *Communication from the California Law Revision Commission Concerning Assembly Bill 2841,* 19 Cal. L. Revision Comm'n Reports 1201, 1239-41 (1988).

Article 1. Claim Where No Pending Action or Proceeding

§ 9350. Application of article

Comment. Section 9350 continues Section 9350 of the repealed Probate Code without change. Provisions governing claims on pending actions or proceedings are located in Section 9370 (claims on pending action or proceeding), not in this article. This chapter does not apply to any proceeding for the administration of a decedent's estate commenced before July 1, 1989. See Section 9399. As to the application of any amendments made after that date, see Section 3.

Background on Section 9350 of Repealed Code

Section 9350 was a new provision added by 1988 Cal. Stat. ch. 1199 § 86. For background on the provisions of this chapter, see the Comment to this chapter under the chapter heading.

§ 9351. Claim prerequisite to bringing action

Comment. Section 9351 continues Section 9351 of the repealed Probate Code without change. For the time within which a claim must be filed, see Section 9100 (claim period). For late claims, see Section 9103. An action may be brought to enforce a liability of the decedent without first filing a claim in the case of a secured obligation. Section 9391 (enforcement of security interest). This chapter does not apply to any proceeding for the administration of a decedent's estate commenced before July 1, 1989. See Section 9399. As to the application of any amendments made after that date, see Section 3.

Section 9351 relates only to an action against the personal representative. It does not affect actions against other persons who may be liable for the decedent's debts. See, e.g., Sections 13109 (affidavit procedure), 13550-13554 (debts of deceased spouse). See also Sections 550-554 (liability of decedent covered by insurance).

Background on Section 9351 of Repealed Code

Section 9351 was added by 1988 Cal. Stat. ch. 1199 § 86. The section restated subdivision (c) of former Probate Code Section 9002 (claim requirement) (as that section existed prior to its amendment by 1988 Cal. Stat. ch. 1199 § 83.5) with the addition of the implied requirement that the claim was rejected in whole or in part. For background on the provisions of this chapter, see the Comment to this chapter under the chapter heading.

§ 9352. Tolling of statute of limitations

Comment. Section 9352 continues Section 9352 of the repealed Probate Code without change. See also Section 9253 (claim barred by statute of limitations may not be allowed or approved). This chapter does not apply to any proceeding for the administration of a decedent's estate commenced before July 1, 1989. See Section 9399. As to the application of any amendments made after that date, see Section 3.

Background on Section 9352 of Repealed Code

Section 9352 was added by 1988 Cal. Stat. ch. 1199 § 86. The section restated subdivisions (a) and (c) of former Probate Code Section 9253 (as that section existed prior to its amendment by 1988 Cal. Stat. ch. 1199 § 85) without substantive change. For background on the provisions of this chapter, see the Comment to this chapter under the chapter heading.

§ 9353. Bar of rejected claims

Comment. Section 9353 continues Section 9353 of the repealed Probate Code without change. See also Section 9253 (claim barred by statute of limitations may not be allowed or approved). This chapter does not apply to any proceeding for the administration of a decedent's estate commenced before July 1, 1989. See Section 9399. As to the application of any amendments made after that date, see Section 3.

Background on Section 9353 of Repealed Code

Section 9353 was added by 1988 Cal. Stat. ch. 1199 § 86. The section restated subdivision (d) of former Probate Code Section 9253 (as that section existed prior to its amendment by 1988 Cal. Stat. ch. 1199 § 85) and subdivision (a) of former Probate Code Section 9257 (repealed by 1988 Cal. Stat. ch. 1199 § 85.5) without substantive change. The provision relating to partial rejection was new. For background on the provisions of this chapter, see the Comment to this chapter under the chapter heading.

§ 9354. Venue and procedure for action on claim

Comment. Section 9354 continues Section 9354 of the repealed Probate Code without change. See also Section 7050 (jurisdiction in superior court). This chapter does not apply to any proceeding for the administration of a decedent's estate commenced before July 1, 1989. See Section 9399. As to the application of any amendments made after that date, see Section 3.

Background on Section 9354 of Repealed Code

Section 9354 was added by 1988 Cal. Stat. ch. 1199 § 86. The section restated subdivisions (b)-(d) of former Probate Code Section 9257 (repealed by 1988 Cal. Stat.

ch. 1199 § 85.5) without substantive change. For background on the provisions of this chapter, see the Comment to this chapter under the chapter heading.

Article 2. Claim Where Action or Proceeding Pending

§ 9370. Claim prerequisite to continuing action

Comment. Section 9370 continues Section 9370 of the repealed Probate Code without change. The personal representative must notify creditors, including plaintiffs in actions against the decedent, if the personal representative has actual knowledge of the creditor. See Section 9050 (notice required). In addition, the substitution requirement applies only if the personal representative notifies plaintiffs whose claims are rejected of the requirement. For late claims, see Section 9103. This chapter does not apply to any proceeding for the administration of a decedent's estate commenced before July 1, 1989. See Section 9399. As to the application of any amendments made after that date, see Section 3.

Background on Section 9370 of Repealed Code

Section 9370 was added by 1988 Cal. Stat. ch. 1199 § 86. Subdivision (a) restated the first sentence of former Probate Code Section 709 (enacted by 1987 Cal. Stat. ch. 923 § 38 and repealed by 1988 Cal. Stat. ch. 1199 § 53) with the addition of the implied requirement that the claim be rejected in whole or in part and that the plaintiff act to substitute the personal representative as a party within three months after rejection of the claim. Subdivision (b) restated the second sentence of former Probate Code Section 709 (enacted by 1987 Cal. Stat. ch. 923 § 38 and repealed by 1988 Cal. Stat. ch. 1199 § 53) without substantive change. For background on the provisions of this chapter, see the Comment to this chapter under the chapter heading.

Article 3. Litigation Where No Claim Required

§ 9390. Claim covered by insurance

Comment. Section 9390 continues Section 9390 of the repealed Probate Code without change. Nothing in this section affects any applicable statutes of limitation relating to the action. Cf. Code Civ. Proc. § 353 (death of party before expiration of limitation period); Prob. Code § 551 (statute of limitations). This chapter does not apply to any proceeding for the administration of a decedent's estate commenced before July 1, 1989. See Section 9399. As to the application of any amendments made after that date, see Section 3.

Background on Section 9390 of Repealed Code

Section 9390 was added by 1988 Cal. Stat. ch. 1199 § 86. The section replaced part of the first sentence of former Probate Code Section 707, the third sentence of former Probate Code Section 709, part of former Probate Code Section 709.1, and subdivision (a) of former Probate Code Section 721 (provisions enacted by 1987 Cal. Stat. ch. 923 § 38 and repealed by 1988 Cal. Stat. ch. 1199 § 53). For background on the provisions of this chapter, see the Comment to this chapter under the chapter heading.

Section 9390, in conjunction with Section 550, made the following significant changes in the former scheme:

(1) The new provisions applied uniformly to actions pending at the death of the decedent and actions commenced after the decedent's death.

(2) Court approval was not required under the new provisions before the plaintiff could commence an action against the estate for the insured amount.

(3) Under the new provisions, the estate of the decedent need not have otherwise qualified for treatment under Sections 13100-13115 (affidavit procedure for collection or transfer of personal property).

(4) The new provisions applied in any case where there is a claim for damages for which the decedent was insured, whether for injury to or death of a person caused by the wrongful act or neglect of the decedent, or otherwise.

(5) The new provisions excused a claim in probate only where the plaintiff is proceeding under Section 550, whether or not the insurer has otherwise accepted the defense of the cause or an appearance has been made on behalf of the decedent.

§ 9391. Enforcement of security interest

Comment. Section 9391 continues Section 9391 of the repealed Probate Code without change. This chapter does not apply to any proceeding for the administration of a decedent's estate commenced before July 1, 1989. See Section 9399. As to the application of any amendments made after that date, see Section 3.

Background on Section 9391 of Repealed Code

Section 9391 was added by 1988 Cal. Stat. ch. 1199 § 86. The section restated former Probate Code Section 716 (enacted by 1987 Cal. Stat. ch. 923 § 38 and repealed by 1988 Cal. Stat. ch. 1199 § 53), omitting the provision relating to attorney's fees. For background on the provisions of this chapter, see the Comment to this chapter under the chapter heading.

Article 4. Transitional Provision

§ 9399. Transitional provision for claims in litigation

Comment. Section 9399 continues Section 9399 of the repealed Probate Code without substantive change. This section is an exception to the general rule of Section 3 that a "new law" applies on its operative date to pending probate proceedings. Where litigation was commenced before July 1, 1989, either against the decedent or against the personal representative, any claim requirements applicable to the litigation are governed by the relevant law in effect before July 1, 1989, and not by this chapter.

Background on Section 9399 of Repealed Code

Section 9399 was a new provision added by 1988 Cal. Stat. ch. 1199 § 86. For background on the provisions of this chapter, see the Comment to this chapter under the chapter heading.

PART 5. ESTATE MANAGEMENT

Comment. This part supersedes Part 5 (commencing with Section 9600) of Division 7 of the repealed Probate Code. The superseded part was enacted upon recommendation of the California Law Revision

Commission. See *Recommendation Relating to Supervised Administration of Decedent's Estate,* 19 Cal. L. Revision Comm'n Reports 5 (1988); *Communication from California Law Revision Commission Concerning Assembly Bill 708,* 19 Cal. L. Revision Comm'n Reports 545 (1988).

CHAPTER 1. GENERAL PROVISIONS

Article 1. Duties and Liabilities of Personal Representative

§ 9600. Duty to manage estate using ordinary care and diligence

Comment. Section 9600 continues Section 9600 of the repealed Probate Code without change. This section is comparable to Section 2401 (Guardianship-Conservatorship Law) and is consistent with prior law. See, e.g., Estate of Beach, 15 Cal. 3d 623, 631, 542 P.2d 994, 125 Cal. Rptr. 570 (1975) (executor required to exercise "that degree of prudence and diligence which a man of ordinary judgment would be expected to bestow upon his own affairs of a like nature"); Lobro v. Watson, 42 Cal. App. 3d 180, 189, 116 Cal. Rptr. 533 (1974) (personal representative "required to exercise the degree of care and prudence that an ordinary person would employ in handling his or her own affairs").

In determining what constitutes ordinary care and diligence, a professional personal representative is held to a higher standard of care based on its presumed expertise than is a lay personal representative. See Estate of Beach, 15 Cal. 3d at 635. Section 9600 applies to all powers and duties of the personal representative, whether or not prior court authorization is required. See also Section 7250 (effect of court authorization or approval).

Subdivision (b) of Section 9600 makes clear that ordinary care and diligence may require that the personal representative exercise a power. For example, the personal representative has the duty to take all steps reasonably necessary for the protection and preservation of the estate property, and this duty requires that the personal representative obtain and maintain insurance on the estate property to the extent reasonably necessary. See Section 9656. At the same time, subdivision (b) also makes clear that the extent to which a power should be exercised is limited to what is required by the exercise of ordinary care and diligence under all the circumstances. Thus, for example, the personal representative is not authorized to obtain or maintain more insurance on the estate property than is reasonably necessary. In determining when a power is required to be exercised and when it may not be exercised, the personal representative has some discretion. For example, the personal representative has discretion to determine the amount of insurance, and

so long as the amount of insurance is not unreasonably high or low under the circumstances, the personal representative has complied with the duty to use ordinary care and diligence.

The liability of a personal representative whose office is vacant, and of surety on bond, continues until settlement of accounts and delivery of all of the estate to successor personal representative or other person appointed by the court to receive it. See Section 8525.

As to orders made, or actions taken, before July 1, 1988, and matters pending on July 1, 1988, see Section 9645. As to the application of any amendments made after that date, see Section 3.

Background on Section 9600 of Repealed Code

Section 9600 was a new provision added by 1987 Cal. Stat. ch. 923 § 93. For background on the provisions of this part, see the Comment to this part under the part heading.

§ 9601. Measure of liability for breach of fiduciary duty

Comment. Section 9601 continues Section 9601 of the repealed Probate Code without change. See also Section 9603 (other remedies not affected). Section 9601 is comparable to Sections 2401.3 (guardians and conservators) and 16440 (trustees) and is in general accord with prior law. See In re Estate of Elizalde, 182 Cal. 427, 435, 188 P. 560 (1920) (liability for misappropriated funds plus interest where no showing that larger profit was received); Estate of Gerber, 73 Cal. App. 3d 96, 113, 140 Cal. Rptr. 577 (1977) (liability for interest due to delay in payment of estate taxes); Estate of Guiol, 28 Cal. App. 3d 818, 824-25, 105 Cal. Rptr. 35 (1972) (breach of duty for turning estate assets over to attorney and failing to protect assets); Estate of McSweeney, 123 Cal. App. 2d 787, 791-92, 268 P.2d 107 (1954) (liability for using estate funds for individual needs) (dictum); Estate of Pardue, 57 Cal. App. 2d 918, 920-21, 135 P.2d 394 (1943) (liability for rental value of property). See also Sections 9631 (liability of joint personal representative for breach of duty by another personal representative), 10380 (liability for neglect or misconduct in sale of estate property), 10381 (liquidated damages for fraudulent sale), 10382 (limitation of actions for recovery of property).

Under subdivision (a), the court has discretion to choose the measure of liability in paragraph (1), (2) or (3) that is appropriate under the circumstances. The reference to "profit made by the personal representative" in paragraph (2) of subdivision (a) refers to personal profit rather than profit to the estate.

The liability of a personal representative whose office is vacant, and of surety on bond, continues until settlement of accounts and delivery of all of the estate to successor personal representative or other person appointed by the court to receive it. See Section 8525.

As to orders made, or actions taken, before July 1, 1988, and matters pending on July 1, 1988, see Section 9645. As to the application of any amendments made after that date, see Section 3.

Background on Section 9601 of Repealed Code

Section 9601 was a new provision added by 1987 Cal. Stat. ch. 923 § 93. For background on the provisions of this part, see the Comment to this part under the part heading.

§ 9602. Measure of liability for interest

Comment. Section 9602 continues Section 9602 of the repealed Probate Code without change. See also Section 9603 (other remedies not affected). Section 9602 is comparable to Section 16441 (measure of liability for interest for breach of trust). See the Comment to Section 16441. See also Code Civ. Proc. § 685.010 (rate of interest on judgments). Section 9602 is consistent with the prior case law rule that executors are liable for interest at the legal rate. See In re Estate of Piercy, 168 Cal. 755, 757-58, 145 P. 91 (1914); In re Estate of Hilliard, 83 Cal. 423, 427-28, 23 P. 393 (1890); In re Estate of Holbert, 39 Cal. 597, 601 (1870) (liability for interest or profit, whichever is greater); Estate of McSweeney, 123 Cal. App. 2d 787, 791-93, 268 P.2d 107 (1954); see also In re Estate of Guglielmi, 138 Cal. App. 80, 90, 31 P.2d 1078 (1934). Unlike the prior case law rule, however, Section 9602 does not allow for annual compounding even where the personal representative is negligent. As to orders made, or actions taken, before July 1, 1988, and matters pending on July 1, 1988, see Section 9645. As to the application of any amendments made after that date, see Section 3.

Background on Section 9602 of Repealed Code

Section 9602 was a new provision added by 1987 Cal. Stat. ch. 923 § 93. For background on the provisions of this part, see the Comment to this part under the part heading.

§ 9603. Other remedies not affected

Comment. Section 9603 continues Section 9603 of the repealed Probate Code without change. This section is comparable to Sections 2401.7 (guardians and conservators) and 16442 (trustees). The section makes clear that Section 9601 does not prevent resort to any other remedy available against the personal representative under the statutory or common law. The section merely retains remedies that existed before the enactment of Sections 9601 and 9602; it does not create any new remedies against a personal representative. As to orders made, or actions taken, before July 1, 1988, and matters pending on July 1, 1988, see Section 9645. As to the application of any amendments made after that date, see Section 3.

Background on Section 9603 of Repealed Code

Section 9603 was a new provision added by 1987 Cal. Stat. ch. 923 § 93. For background on the provisions of this part, see the Comment to this part under the part heading.

§ 9604. Enforceability of promise of personal representative personally to answer in damages or to pay debts of decedent

Comment. Section 9604 continues Section 9604 of the repealed Probate Code without change. As to orders made, or actions taken, before July 1, 1988, and matters pending on July 1, 1988, see Section 9645. As to the application of any amendments made after that date, see Section 3.

Background on Section 9604 of Repealed Code

Section 9604 was added by 1987 Cal. Stat. ch. 923 § 93. The section restated former Probate Code Section 737 (repealed by 1987 Cal. Stat. ch. 923 § 37) without substantive change. For background on the provisions of this part, see the Comment to this part under the part heading.

§ 9605. Claims against personal representative

Comment. Section 9605 continues Section 9605 of the repealed Probate Code without change. See also Section 8851 (discharge or devise of claims).

Background on Section 9605 of Repealed Code

Section 9605 was added by 1988 Cal. Stat. ch. 1199 § 86.5. The section restated parts of former Probate Code Section 602 (repealed by 1988 Cal. Stat. ch. 1199 § 51) and extended the provisions from executors to all personal representatives. For background on this section, see *Communication from the California Law Revision Commission Concerning Assembly Bill 2841*, 19 Cal. L. Revision Comm'n Reports 1201, 1241 (1988). For background on the provisions of this part, see also the Comment to this part under the part heading.

§ 9606. Liability of personal representative who signs instrument

Comment. Section 9606 is new. It generalizes provisions formerly found in Section 9805(b) and is comparable to Sections 18000 (trust law) and 2110 (guardianship-conservatorship law).

Article 2. Court Supervision

§ 9610. Extent of court supervision

Comment. Section 9610 continues Section 9610 of the repealed Probate Code without change. This section is comparable to subdivision (a) of Section 2450 (Guardianship-Conservatorship Law). The section is consistent with prior law under which a personal representative could perform many acts without prior court approval. See In re Estate of Fulmer, 203 Cal. 693, 697-98, 265 P. 920 (1928); Estate of Palm, 68 Cal. App. 2d 204, 212, 156 P.2d 62 (1945).

In a case where Section 9610 authorizes the personal representative to act without court authorization and the personal representative decides to take the action without obtaining court authorization, the personal representative must use ordinary care and diligence in taking the action. See Section 9600. As to the effect of court authorization or approval, see Section 7250. As to when the personal representative is required to exercise a power and when the personal representative may not exercise a power, see Section 9600(b).

As to orders made, or actions taken, before July 1, 1988, and matters pending on July 1, 1988, see Section 9645. As to the application of any amendments made after that date, see Section 3.

Background on Section 9610 of Repealed Code

Section 9610 was a new provision added by 1987 Cal. Stat. ch. 923 § 93. For background on the provisions of this part, see the Comment to this part under the part heading.

§ 9611. Instructions from or confirmation by court

Comment. Section 9611 continues Section 9611 of the repealed Probate Code without change. For general provisions, see Sections 1000-1004 (rules of practice), 1020-1023 (petitions and other papers), 1040-1050 (hearings and orders), 1200-1230 (notice of hearing), 1250-1252 (request for special notice), 1260-1265 (proof of giving of notice).

Section 9611 permits a petition for instructions only where no other procedure is provided by statute. For example, a petition for instructions is used to obtain court authorization to incorporate the decedent's unincorporated business, there being no specific provision governing that matter. Compare Section 10512 (independent administration authority).

If another procedure is provided by statute but the personal representative is uncertain whether the statute providing the other procedure is applicable to the particular case, the personal representative may petition in the alternative, giving notice that is sufficient to satisfy the requirements of both Section 9611 and the other possibly applicable statute.

Only the personal representative may petition for instructions under Section 9611. But see Section 9613 (right of interested person to petition for order directing personal representative to act to avoid great or irreparable injury).

Subdivision (a) makes clear that the court may not only instruct the personal representative in advance, but may also confirm actions already taken. As to the effect of court authorization or approval, see Section 7250. As to orders made, or actions taken, before July 1, 1988, and matters pending on July 1, 1988, see Section 9645. As to the application

of any amendments made after that date, see Section 3. See also Section 9603 (other remedies not affected).

Background on Section 9611 of Repealed Code

Section 9611 was added by 1987 Cal. Stat. ch. 923 § 93. Section 9611 continued former Probate Code Section 588 (repealed by 1987 Cal. Stat. ch. 923 § 35) insofar as that section authorized only the personal representative to petition for instructions. In this respect, the authorization was more limited than the authorization of the Guardianship-Conservatorship Law, which authorizes a creditor or other interested person to file a petition for instructions (Section 2403). The words "from time to time," which appeared in former Section 588, were omitted as unnecessary, since there is no limit on the number of times instructions or confirmations can be requested. Subdivision (b) required that notice be given at least 15 days before the hearing pursuant to Section 1220 instead of at least 10 days before the hearing as required by former Probate Code Section 1200.5 (repealed by 1987 Cal. Stat. ch. 923 § 59). For background on the provisions of this part, see the Comment to this part under the part heading.

§ 9613. Order compelling personal representative to act or not to act

Comment. Section 9613 continues Section 9613 of the repealed Probate Code without substantive change. For general provisions, see Sections 1000-1004 (rules of practice), 1020-1023 (petitions and other papers), 1040-1050 (hearings and orders), 1200-1230 (notice of hearing), 1250-1252 (request for special notice), 1260-1265 (proof of giving of notice).

Section 9613 permits the court to direct the personal representative to act or not to act concerning the estate. The showing of irreparable injury under Section 9613 is analogous to the irreparable injury that must be shown for injunctive relief. Cf. Code Civ. Proc. § 526(2); 6 B. Witkin, California Procedure *Provisional Remedies* § 254, at 221 (3d ed. 1985 & Supp. 1988). The existence of a remedy under Section 9613 does not limit the right of a personal representative to petition for instructions. See Section 9611. As to orders and transactions affecting property, see Sections 7260-7263. As to orders made, or actions taken, before July 1, 1988, and matters pending on July 1, 1988, see Section 9645. As to the application of any amendments made after that date, see Section 3.

Background on Section 9613 of Repealed Code

Section 9613 was a new provision added by 1987 Cal. Stat. ch. 923 § 93. For background on the provisions of this part, see the Comment to this part under the part heading.

§ 9614. Suspension of powers of personal representative

Comment. Section 9614 continues Section 9614 of the repealed Probate Code without change. For general provisions, see Sections 1000-1004 (rules of practice), 1020-1023 (petitions and other papers), 1040-1050 (hearings and orders), 1200-1230 (notice of hearing), 1250-1252 (request for special notice), 1260-1265 (proof of giving of notice).

Section 9614 is drawn from Section 3-607 of the Uniform Probate Code (1987). As to the construction of provisions drawn from uniform acts, see Section 2. The section includes but is not limited to the situation (1) where the personal representative is appointed before or pending probate of a will or is appointed under a previous will or (2) where there is litigation over the bond of the personal representative and it is alleged that the estate is being wasted. For background on this section, see *Comments to Conforming Revisions and Repeals,* 19 Cal. L. Revision Comm'n Reports 1031, 1092-93 (1988).

Background on Section 9614 of Repealed Code

Section 9614 was added by 1988 Cal. Stat. ch. 1199 § 87. The section superseded former Probate Code Sections 352 (repealed by 1988 Cal. Stat. ch. 1199 § 40) and 550 (repealed by 1988 Cal. Stat. ch. 1199 § 48). The provision for assessment of attorney's fees was new. For background on the provisions of this part, see also the Comment to this part under the part heading.

Article 3. Summary Determination of Disputes

§ 9620. Submission of dispute to temporary judge

Comment. Section 9620 continues Section 9620 of the repealed Probate Code without substantive change.

Section 9620 is designed to reduce the cost of administration of estates and to ease the court's workload by encouraging disposition of disputes by summary proceedings rather than by litigation. See Review of Selected 1968 Code Legislation 226-28 (Cal. Cont. Ed. Bar 1968). Nothing in Section 9620 limits the alternative of reference and trial by a referee under Code of Civil Procedure Sections 638-645.1, and those provisions remain applicable to probate matters. Summary proceedings under Section 9620 do not include a right to jury trial. See Estate of Beach, 15 Cal. 3d 623, 642, 542 P.2d 994, 125 Cal. Rptr. 570 (1975). See also Section 7200 (right to jury trial).

Under Section 9620, any member of the State Bar (including a court commissioner or referee) may be appointed as a temporary judge. See also Cal. Const. art. VI, § 21 ("On stipulation of the parties litigant the court may order a cause to be tried by a temporary judge who is a member of the State Bar, sworn and empowered to act until final determination of the cause."); Code Civ. Proc. § 259(5) (power of court commissioner to act as temporary judge). Section 9620 does not require that the temporary judge try the matter in a regular courtroom; the temporary judge may try the matter at his or her office or at any other place.

As to orders made, or actions taken, before July 1, 1988, and matters pending on July 1, 1988, see Section 9645. As to the application of any amendments made after that date, see Section 3.

Background on Section 9620 of Repealed Code

Section 9620 was added by 1987 Cal. Stat. ch. 923 § 93 and was amended by 1988 Cal. Stat. ch. 1199 § 87.5 and 1989 Cal. Stat. ch. 21 § 24. The section restated and generalized paragraph (2) of former Probate Code Section 718 (repealed by 1987 Cal. Stat. ch. 923 § 37). Former Section 718 was limited to claims filed or presented, but Section 9620 applied to any dispute relating to the estate, including but not limited to one concerning a claim by or against the decedent or the estate. Paragraph (2) of former Section 718 required a written decision; this requirement was replaced by a provision that adopted the statement of decision provision of Code of Civil Procedure Section 632.

The reference in paragraph (2) of former Section 718 to "a commissioner or referee who is regularly attached to the court and designated in the agreement or to a judge pro tempore designated in the agreement" was replaced by a reference to "a temporary judge designated in the agreement." This substitution made no substantive change in the law but made the provision conform to the language used in Section 21 of Article 6 of the California Constitution ("On stipulation of the parties litigant the court may order a cause to be tried by a temporary judge who is a member of the State Bar, sworn and empowered to act until final determination of the cause.").

The 1988 and 1989 amendments corrected a section reference.

For background on the provisions of this part, see the Comment to this part under the part heading.

§ 9621. Submission of dispute to arbitration

Comment. Section 9621 continues Section 9621 of the repealed Probate Code without substantive change. The provision giving the court authority to order notice be given for a shorter period or that notice be dispensed with has been omitted as unnecessary in view of the general provisions giving the court this authority. See Sections 1203, 1220(c). For general provisions relating to notice, see Sections 1200-1230 (notice of hearing), 1250-1252 (request for special notice), 1260-1265 (proof of giving of notice). As to orders made, or actions taken, before July 1, 1988, and matters pending on July 1, 1988, see Section 9645. As to the application of any amendments made after that date, see Section 3.

Section 9621 is comparable to Section 2406 (Guardianship-Conservatorship Law). Arbitration pursuant to Section 9621 is conducted under Code of Civil Procedure Sections 1280-1294.2. This is "conventional" or "ordinary" arbitration. See 6 B. Witkin, California Procedure *Proceedings Without Trial* § 320, at 612-13 (3d ed. 1985 & Supp. 1988). In conventional or ordinary arbitration, there is no right to trial de novo, and, although the court may correct or vacate an award, the grounds for so doing are limited. See Code Civ. Proc. §§ 1285-1294.2. There is no right to a jury trial when an arbitration award as contemplated by Section 9621 is confirmed. See Code Civ. Proc. § 1286; Madden v. Kaiser Foundation Hospitals, 17 Cal. 3d 699, 712-14, 552 P.2d 1178, 131 Cal. Rptr. 882 (1976).

Background on Section 9621 of Repealed Code

Section 9621 was a new provision added by 1987 Cal. Stat. ch. 923 § 93. For background on the provisions of this part, see the Comment to this part under the part heading.

Article 4. Joint Personal Representatives

§ 9630. Authority of joint personal representatives to act

Comment. Section 9630 continues Section 9630 of the repealed Probate Code without change. See also Section 8521 (effect of vacancy in office of fewer than all personal representatives).

Under Section 9630, absence from the state does not suspend the power of a personal representative to act. See Sections 8570-8577. And, absent a court order authorizing the remaining personal representatives to act, if one of several joint personal representatives is absent from California, the same number of joint personal representatives must concur in the action as would be required if the absent personal representative were still in California.

Paragraph (1) of subdivision (a) codifies case law. See Bullis v. Security Pac. Nat'l Bank, 21 Cal. 3d 801, 810, 582 P.2d 109, 148 Cal. Rptr. 22 (1978). The language used in subdivisions (b) and (c) is comparable to language used in Section 2105 (Guardianship-Conservatorship Law). Paragraph (2) of subdivision (d) is drawn from the law in other states. See Annot., 85 A.L.R.3d 1124 (1978 and Supp 1988). For general provisions relating to petitions, see Sections 1020-1023.

As to orders made, or actions taken, before July 1, 1988, and matters pending on July 1, 1988, see Section 9645. As to the application of any amendments made after that date, see Section 3.

Background on Section 9630 of Repealed Code

Section 9630 was added by 1987 Cal. Stat. ch. 923 § 93. The section replaced former Probate Code Section 570 (repealed by 1987 Cal. Stat. ch. 923 § 35). Paragraph (1) of subdivision (a) codified case law. See Bullis v. Security Pac. Nat'l Bank, 21 Cal. 3d 801, 810, 582 P.2d 109, 148 Cal. Rptr. 22 (1978). Paragraph (2) of subdivision (a) restated the second sentence of former Section 570 without substantive change. Subdivisions (b) and (c) replaced the first sentence of former Section 570 with language drawn in part from Section 2105 (Guardianship-Conservatorship Law). Subdivision (d) was new. Paragraph (1) of subdivision (d) was drawn from a portion of the last sentence of former Probate Code Section 1000 and of the second sentence of former Probate Code Section 1020 (provisions repealed by 1988 Cal. Stat. ch. 1199 § 55.5). For background on the provisions of this part, see the Comment to this part under the part heading.

§ 9631. Liability of joint personal representative for breach of duty by another personal representative

Comment. Section 9631 continues Section 9631 of the repealed Probate Code without change. This section is comparable to the law applicable to guardians and conservators (Section 2105.5) and trustees (Section 16402). Subdivision (b), which imposes liability on one personal representative for a breach of fiduciary duty by another representative under certain circumstances, is generally consistent with prior case law. See In re Estate of Osborn, 87 Cal. 1, 25 P. 157 (1890). As to orders made, or actions taken, before July 1, 1988, and matters pending on July 1, 1988, see Section 9645. As to the application of any amendments made after that date, see Section 3.

Background on Section 9631 of Repealed Code

Section 9631 was added by 1987 Cal. Stat. ch. 923 § 93. The section replaced a provision formerly found in the last portion of the first sentence of former Probate Code Section 920 (before its amendment by 1987 Cal. Stat. ch. 923 § 44; repealed by 1988 Cal. Stat. ch. 1199 § 54.5) (personal representative not liable for act or negligence of coexecutor or coadministrator except for collusion or gross negligence). For background on the provisions of this part, see the Comment to this part under the part heading.

Article 5. Independent Administration

§ 9640. Independent administration authority not limited

Comment. Section 9640 continues Section 9640 of the repealed Probate Code without substantive change. As to orders made, or actions taken, before July 1, 1988, and matters pending on July 1, 1988, see Section 9645. As to the application of any amendments made after that date, see Section 3.

Background on Section 9640 of Repealed Code

Section 9640 was a new provision added by 1987 Cal. Stat. ch. 923 § 93. For background on the provisions of this part, see the Comment to this part under the part heading.

Article 6. Transitional Provision

§ 9645. Matters pending on July 1, 1988; orders made or actions taken before July 1, 1988

Comment. Section 9645 continues Section 9645 of the repealed Probate Code without substantive change. This section limits the application of this part to petitions and other matters that were pending on July 1, 1988 (operative date of this part of repealed Probate Code); this part applies to these pending petitions and other pending matters unless the court with respect to a particular matter determines that application of a particular provision of this part would substantially

interfere with the effective conduct of the matter or with the rights of the parties or other interested persons. If the court makes such a determination, the matter is governed by prior law which is preserved for this purpose.

Background on Section 9645 of Repealed Code

Section 9645 was a new provision added by 1987 Cal. Stat. ch. 923 § 93. For background on the provisions of this part, see the Comment to this part under the part heading.

CHAPTER 2. ESTATE MANAGEMENT GENERALLY

§ 9650. Possession and management of decedent's estate

Comment. Section 9650 continues Section 9650 of the repealed Probate Code without substantive change. The introductory clause of subdivision (a) recognizes that the subdivision is subject to other provisions of law governing possession of the estate. See, e.g., Sections 6500 (temporary possession of family dwelling and exempt property), 9780 (abandonment of tangible personal property). The first sentence of paragraph (1) of subdivision (a) uses language drawn in part from Section 3-709 of the Uniform Probate Code (1987). For a comparable provision in the Guardianship-Conservatorship Law, see Section 2451 (collection of debts and benefits). Where necessary, the personal representative may bring an action to recover possession of estate property or to determine title thereto. See Sections 9820 (action or proceeding for benefit of estate), 9654 (action by heirs or devisees for possession or to quiet title to real property of estate). See also Sections 7050 (estate subject to control of superior court), 9605 (appointment of person as personal representative does not discharge any claim the decedent has against the person).

Subdivision (b) is drawn from Section 3-709 of the Uniform Probate Code (1987). Under subdivision (b), the personal representative not only has a duty to maintain estate property in a reasonably good condition but also has, for example, a duty to obtain and maintain reasonably necessary insurance on estate property. Cf. Section 9656 (authority to insure). See also Section 9610 (extent of court supervision).

Subdivision (c) is drawn from Section 3-709 of the Uniform Probate Code (1987). This subdivision is designed to avoid disruption of possession of the decedent's assets by the heirs or devisees whenever possible. But, if the personal representative decides that possession of an asset is necessary or desirable for purposes of administration, the heir or devisee must surrender the asset to the personal representative. It may be possible for the heir or devisee to question the judgment of the personal representative in a later proceeding to surcharge for breach of fiduciary

duty, but this possibility should not interfere with the personal representative's administrative authority as it relates to possession of the estate. On the other hand, the personal representative may be liable for failing to take possession of estate property if the property is thereby lost to those entitled to it. In re Estate of Boggs, 33 Cal. App. 2d 30, 33, 90 P.2d 814 (1939). However, where the property is in the possession of the person who will ultimately receive it (as authorized under subdivision (c) of Section 9650), the personal representative is not liable to the person having the property if it is not properly cared for by that person.

As to the construction of provisions drawn from uniform acts, see Section 2. As to orders made, or actions taken, before July 1, 1988, and matters pending on July 1, 1988, see Section 9645. As to the application of any amendments made after that date, see Section 3.

Background on Section 9650 of Repealed Code

Section 9650 was added by 1987 Cal. Stat. ch. 923 § 93. The first sentence of paragraph (1) of subdivision (a) restated subdivision (a) of former Probate Code Section 571 without substantive change and superseded a portion of the first sentence of former Probate Code Section 581 (provisions repealed by 1987 Cal. Stat. ch. 923 § 35). The second sentence of paragraph (1) of subdivision (a) restated a provision formerly found in the first sentence of Probate Code Section 920 (before its amendment by 1987 Cal. Stat. ch. 923 § 44; repealed by 1988 Cal. Stat. ch. 1199 § 54.5) without substantive change. Paragraph (2) of subdivision (a) restated the last portion of the first sentence of former Probate Code Section 581 without substantive change.

Subdivision (b) replaced the second sentence of former Section 581 (repealed by 1987 Cal. Stat. ch. 923 § 35) which imposed on the personal representative the duty of keeping in good tenantable repair all houses, buildings, and fixtures on estate property under the control of the personal representative.

Subdivision (c) replaced the third sentence of former Section 581 and all of former Probate Code Section 582 (provisions repealed by 1987 Cal. Stat. ch. 923 § 35). Under subdivision (c), the expiration of the time to file or present claims no longer has significance in this context. Under former Section 582, after the time to file or present claims expired, the personal representative had to deliver possession of real property to the heirs or devisees unless needed to pay debts. Under former Section 581, the personal representative could not recover property from an heir or devisee unless the personal representative could prove it was needed in estate administration. By contrast, the sole question under subdivision (c) of Section 9650 is whether, in the judgment of the personal representative, the property is "necessary for purposes of administration."

For background on the provisions of this part, see the Comment to this part under the part heading.

§ 9651. Taking possession of property in good faith

Comment. Section 9651 continues Section 9651 of the repealed Probate Code without substantive change. This section does not apply in any proceeding for administration of a decedent's estate commenced before January 1, 1991. See Section 900. As to the application of any

amendments made after that date, see Section 3. As to the law applicable in a proceeding commenced before January 1, 1991, see Section 900. As to orders made, or actions taken, before July 1, 1988, and matters pending on July 1, 1988, see Section 9645.

Background on Section 9651 of Repealed Code

Section 9651 was added by 1987 Cal. Stat. ch. 923 § 93. The section restated subdivision (c) of former Probate Code Section 571 (repealed by 1987 Cal. Stat. ch. 923 § 35) without substantive change. Section 9651 was amended by 1990 Cal. Stat. [AB 831] to make it consistent with the new provisions relating to compensation of the estate attorney and to make nonsubstantive improvements in the language of the section. See Sections 9681-9686. See also *Recommendation Relating to Probate Law: Hiring and Paying Attorneys, Advisors, and Others; Compensation of Personal Representative*, 20 Cal. L. Revision Comm'n Reports 31 (1990) and *Communication from the California Law Revision Commission Concerning Assembly Bill 831*, 20 Cal. L. Revision Comm'n Reports ___ (1990). For background on the provisions of this part, see the Comment to this part under the part heading.

§ 9652. Duty to keep cash invested

Comment. Section 9652 continues Section 9652 of the repealed Probate Code without change. For the provisions concerning investments authorized by law, see Sections 9700, 9730, 9731. See also Section 9705 (interest on deposits by trust company). As to orders made, or actions taken, before July 1, 1988, and matters pending on July 1, 1988, see Section 9645. As to the application of any amendments made after that date, see Section 3.

Background on Section 9652 of Repealed Code

Section 9652 was added by 1987 Cal. Stat. ch. 923 § 93. The section restated a provision formerly found in Section 920.3 (before its amendment by 1987 Cal. Stat. ch. 923 § 45; repealed by 1988 Cal. Stat. ch. 1199 § 54.5) without substantive change. For background on the provisions of this part, see the Comment to this part under the part heading.

§ 9653. Duty to recover property transferred in fraud of creditors

Comment. Section 9653 continues Section 9653 of the repealed Probate Code without substantive change. Under subdivision (a), the personal representative must prosecute the action, but may settle the action as in other actions generally. In addition, the personal representative may, with court approval, assign to the creditor the right to bring the action. See Webb v. Pillsbury, 23 Cal. 2d 324, 328-29, 144 P.2d 1 (1943). The requirement of subdivision (a) that the transfer must have been "during lifetime" does not preclude recovery of property given by a transfer which takes effect at death, such as a joint tenancy or life insurance. See, e.g., Rupp v. Kahn, 246 Cal. App. 2d 188, 55 Cal. Rptr. 108 (1966) (joint tenancy); Headen v. Miller, 141 Cal. App. 3d 169, 190 Cal. Rptr. 198 (1983) (life insurance).

The authority in paragraph (2) of subdivision (a) for a creditor to recover a gift made in view of death (Civil Code § 1149) is qualified by the requirement in the introductory clause of subdivision (a) that there be insufficient estate assets to pay creditors. See also Adams v. Prather, 176 Cal. 33, 40-42, 167 P. 534 (1917) (gift rendering estate insolvent); Civil Code §§ 1149-1153 (gifts in view of death).

In cases where Section 9653 applies, the personal representative must take action to recover the property even in the absence of a request by a creditor. Goldstein v. Prien, 143 Cal. App. 2d 123, 127, 299 P.2d 344 (1956). See also Section 9820 (actions or proceedings for benefit of estate).

As to orders made, or actions taken, before July 1, 1988, and matters pending on July 1, 1988, see Section 9645. As to the application of any amendments made after that date, see Section 3.

Background on Section 9653 of Repealed Code

Section 9653 was added by 1987 Cal. Stat. ch. 923 § 93. Subdivision (a) restated former Probate Code Section 579 (repealed by 1987 Cal. Stat. ch. 923 § 35) without substantive change, except that the former provision that the personal representative must prosecute the action to recover the property "to final judgment" was not continued. Under subdivision (a), the personal representative must prosecute the action, but may settle the action as in other actions generally.

The reference in paragraph (1) of subdivision (a) to conveyances fraudulent as to creditors under the Uniform Fraudulent Transfer Act (Civil Code §§ 3439-3439.12) replaced the former reference to conveyances made with intent to defraud creditors, to avoid any obligation due another, or that is void as against creditors. This change was nonsubstantive. See Webb v. Pillsbury, 23 Cal. 2d 324, 144 P.2d 1 (1943); Estate of Heigho, 186 Cal. App. 2d 360, 365-66, 9 Cal. Rptr. 196 (1960); Goldstein v. Prien, 143 Cal. App. 2d 123, 127, 299 P.2d 344 (1956).

The authority in paragraph (2) of subdivision (a) for a creditor to recover a gift made in view of death (Civil Code § 1149) is qualified by the requirement in the introductory clause of subdivision (a) that there be insufficient estate assets to pay creditors. This continued a provision in former Section 579 (repealed by 1987 Cal. Stat. ch. 923 § 35).

Subdivisions (b) and (c) restated former Probate Code Section 580 (repealed by 1987 Cal. Stat. ch. 923 § 35) with the following additions:

(1) Authority was added in subdivision (b) for the court to require the creditor to pay all or part of the personal representative's attorney's fees.

(2) The provision in subdivision (c) for application of the proceeds of sale first to costs and expenses of suit was new. The last sentence of subdivision (c) was new.

For background on the provisions of this part, see the Comment to this part under the part heading.

§ 9654. Action by heirs or devisees for possession of or to quiet title to property

Comment. Section 9654 continues Section 9654 of the repealed Probate Code without change. See also Sections 9650 (right of personal representative to possession or control of estate), 9820 (authority of

personal representative to maintain action for benefit of estate).

As to orders made, or actions taken, before July 1, 1988, and matters pending on July 1, 1988, see Section 9645. As to the application of any amendments made after that date, see Section 3.

Background on Section 9654 of Repealed Code

Section 9654 was added by 1987 Cal. Stat. ch. 923 § 93. The section restated the fourth sentence of former Probate Code Section 581 (repealed by 1987 Cal. Stat. ch. 923 § 35) and broadened it to apply to personal property as well as to real property. For background on the provisions of this part, see the Comment to this part under the part heading.

§ 9655. Voting rights with respect to corporate shares or memberships or property

Comment. Section 9655 continues Section 9655 of the repealed Probate Code without substantive change. The personal representative may act under Section 9655 without prior court authorization. See Section 9610. This section is comparable to Section 2458 (Guardianship-Conservatorship Law).

The word "meeting" in subdivision (b) includes a meeting of shareholders, members, or property owners, but is not so limited. Subdivision (c) permits authorization of action taken at a defectively noticed meeting by approval of the minutes of the meeting if the approval satisfies the requirements of the Corporations Code or other applicable law. See also Corp. Code §§ 702(a) (personal representative may vote share), 705(a) (person entitled to vote shares may give proxy). As to orders made, or actions taken, before July 1, 1988, and matters pending on July 1, 1988, see Section 9645. As to the application of any amendments made after that date, see Section 3.

Background on Section 9655 of Repealed Code

Section 9655 was added by 1987 Cal. Stat. ch. 923 § 93. The section was consistent with former Probate Code Section 589 (repealed by 1987 Cal. Stat. ch. 923 § 35). Former Section 589 permitted the personal representative to authorize "by a writing" any action which could be taken by shareholders. The requirement of a writing was not continued, but this change was not significant. Whether a writing is required in such cases is governed by the Corporations Code, which generally does require a writing for ratification by shareholders or members. For example, the transactions of an improperly called or noticed meeting may be ratified only by a signed instrument. Corp. Code § 601(e). Also, a writing is required for shareholder consent to action taken without a meeting. Corp. Code § 603. For background on the provisions of this part, see the Comment to this part under the part heading.

§ 9656. Insuring estate property; insuring personal representative against liability

Comment. Section 9656 continues Section 9656 of the repealed Probate Code without change. The personal representative may act under Section 9656 without prior court authorization. See Section 9610. The

personal representative is required to exercise the power granted by this section to the extent that ordinary care and diligence require that the power be exercised, and may not exercise the power to the extent that ordinary care and diligence require that the power not be exercised. See Section 9600(b). For example, if the estate includes real property, the personal representative ordinarily will have the responsibility to maintain a reasonable amount of insurance on improvements on property and may insure himself or herself against personal liability arising out of the duty to maintain the property. Where the personal representative properly exercises the power under this section, the cost of insurance for estate property or to protect the personal representative against liability is a proper expense of estate administration. As to orders made, or actions taken, before July 1, 1988, and matters pending on July 1, 1988, see Section 9645. As to the application of any amendments made after that date, see Section 3.

Background on Section 9656 of Repealed Code

Section 9656 was added by 1987 Cal. Stat. ch. 923 § 93. The section was drawn from subdivision (i) of former Probate Code Section 591.6 (repealed by 1987 Cal. Stat. ch. 923 § 35). The section continued a power implied under former law. For background on the provisions of this part, see the Comment to this part under the part heading.

§ 9657. Profit or loss to the estate

Comment. Section 9657 continues Section 9657 of the repealed Probate Code without change. See also Section 10005 (property sold for more or less than appraised value). As to orders made, or actions taken, before July 1, 1988, and matters pending on July 1, 1988, see Section 9645. As to the application of any amendments made after that date, see Section 3.

Background on Section 9657 of Repealed Code

Section 9657 was added by 1987 Cal. Stat. ch. 923 § 93. The section restated the former second sentence of former Probate Code Section 920 (prior to its amendment by 1987 Cal. Stat. ch. 923 § 44) without substantive change. For background on the provisions of this part, see the Comment to this part under the part heading.

CHAPTER 2.5. HIRING AND PAYING ATTORNEYS, ADVISERS, AND OTHERS

Comment. This chapter supersedes Chapter 2.5 (commencing with Section 9680) of Part 5 of Division 7 of the repealed Probate Code. The superseded chapter was enacted upon recommendation of the California Law Revision Commission. See *Recommendation Relating to Probate Law: Hiring and Paying Attorneys, Advisors, and Others; Compensation of Personal Representative,* 20 Cal. L. Revision Comm'n Reports 31 (1990). See also *Communication from the California Law Revision*

Commission Concerning Assembly Bill 831, 20 Cal. L. Revision Comm'n Reports ___ (1990).

§ 9680. Authority to hire attorneys, advisers, and others

Comment. Section 9680 continues Section 9680 of the repealed Probate Code without change. It is drawn from paragraph (21) of Section 3-715 of the Uniform Probate Code (1987) and from the California Trust Law (Section 16247). The broad authority granted by Section 9680 covers all aspects of estate administration from opening estate administration to closing estate administration, including but not limited to tax work. The authority may be exercised by the personal representative without prior court authorization (Section 9610), unless otherwise provided by the will or by court order. As to the right of an interested person to obtain court review of the reasonableness of the hiring and compensation, see Section 9684 and the Comment thereto.

The language at the end of subdivision (a) which permits hiring of persons "even if they are associated or affiliated with the personal representative" makes clear that a trust company that is a personal representative may "hire" other departments or affiliates of the trust company to perform such services as accounting or tax services. Note, however, that the introductory portion of subdivision (a) makes clear that this authority is subject to the limitation of section 10804 (personal representative also serving as estate attorney). See the Comment to Section 10804.

The notice of proposed action procedure under the Independent Administration of Estates Act may be used for the hiring and payment of persons under Section 9680. See Sections 10404.5, 10550, 10565, 10580(b) (notice of proposed action permitted but not required); Sections 10585.5, 10590 (effect of giving notice of proposed action).

Section 9680 makes clear that the personal representative must act reasonably in exercising the power granted. The reference to Section 10804 in the introductory clause makes clear that the right of the personal representative who is an attorney to receive compensation for services as the estate attorney as well as the personal representative is governed by Section 10804. The introductory clause also recognizes that the authority granted by Section 9680 may be restricted or otherwise modified by the testator's will or by court order. However, the court may grant relief from a limiting provision of the decedent's will. See Section 9682.

The personal representative is responsible for the administration of the estate and is liable for failure to carry out the duties of the office. Accordingly, the personal representative must be free to select the

attorney and other persons hired to advise or assist the personal representative in the administration of the estate.

Section 9680 merely deals with the authority of the personal representative to employ persons to advise or assist in the administration of the estate. The question of whether the person hired is to be paid out of estate funds or out of the personal representative's own funds is governed by Section 9683.

As to the law applicable to a proceeding commenced before January 1, 1991, see Section 9686. See also Section 10406(c). As to the application of any amendments made after that date, see Section 3.

Background on Section 9680 of Repealed Code

Section 9680 was a new provision added by 1990 Cal. Stat. [AB 831]. Subdivision (b) codified the case law rule that a direction in the will to hire an attorney or other adviser is precatory and not binding on the personal representative. See In re Estate of Ogier, 101 Cal. 381, 35 P. 900 (1894). For background on the provisions of this chapter, see the Comment to this chapter under the chapter heading.

§ 9681. Compensation determined by agreement

Comment. Section 9681 continues Section 9681 of the repealed Probate Code without change. Subdivision (a) makes clear that the compensation of persons hired under Section 9680, including the attorney for the personal representative, is determined by agreement between the personal representative and the person hired. The policy reflected in subdivision (a) is consistent with Sections 13157 (court order determining succession to real property) and 13660 (confirming property to surviving spouse).

Subdivision (b) recognizes that the decedent's will may fix the compensation or provide the manner for determining the compensation. If this is the case, the person hired is entitled to the compensation provided in the will or compensation determined as provided in the will, as the case may be, and the court may not reduce the compensation so determined. But see Section 9682 (relief from limiting provision of decedent's will).

As to the right of an interested person to obtain court review of the reasonableness of the hiring and compensation of any person, see Section 9684 and the Comment thereto. See also Section 9685 (right of attorney to decline to be the attorney for the personal representative; right of attorney to withdraw as the attorney for the personal representative).

The notice of proposed action procedure under the Independent Administration of Estates Act may be used. See Sections 10404.5, 10550, 10565, 10580(b) (notice of proposed action permitted but not required); Sections 10585.5, 10590 (effect of giving notice of proposed action).

As to the law applicable to a proceeding commenced before January 1, 1991, see Section 9686. As to the application of any amendments made after that date, see Section 3.

Background on Section 9681 of Repealed Code

Subdivision (a) of Section 9681 was a new provision added by 1990 Cal. Stat. [AB 831]. Subdivision (b) superseded a portion of former Probate Code Section 900 and a portion of the first sentence of former Probate Code Section 901 insofar as those provisions were made applicable to estate attorneys by the first sentence of former Probate Code Section 910. For background on the provisions of this chapter, see the Comment to this chapter under the chapter heading.

§ 9682. Relief from limiting provision of decedent's will

Comment. Section 9682 continues Section 9682 of the repealed Probate Code without change. It is similar in concept to the authority given the court under Section 10002 (order relieving personal representative of duty to comply with directions given in will as to the mode of selling property or the particular property to be sold). For a comparable provision applicable to personal representatives, see Section 10802.

The court may make an order granting relief from a provision of the will fixing the compensation of the estate attorney, for example, because the passage of time has made the compensation provided in the will so inadequate that a competent lawyer can not be obtained to handle the estate proceeding. If the attorney is dissatisfied with the ruling of the court, the attorney may withdraw as estate attorney. See Section 9685 (right of attorney to decline to be the attorney for the personal representative; right of attorney to withdraw as the attorney for the personal representative).

For general provisions, see Sections 1000-1004 (rules of practice), 1020-1023 (petitions and other papers), 1040-1050 (hearings and orders), 1200-1230 (notice of hearing), 1250-1252 (request for special notice), 1260-1265 (proof of giving of notice).

As to the law applicable to a proceeding commenced before January 1, 1991, see Section 9686. As to the application of any amendments made after that date, see Section 3.

Background on Section 9682 of Repealed Code

Section 9682 was a new provision added by 1990 Cal. Stat. [AB 831]. The section superseded the portions of former Probate Code Sections 900 and 901, made applicable to estate attorneys by the first sentence of former Probate Code Section 910, that permitted the estate attorney to renounce the compensation provided by the will and to receive the statutory compensation. Instead, the section imposed a requirement that court approval be obtained before the estate attorney may be relieved from provisions of the will governing compensation. For background on the provisions of this chapter, see the Comment to this chapter under the chapter heading.

§ 9683. Payment out of funds of estate

Comment. Section 9683 continues Section 9683 of the repealed Probate Code without change. Subdivision (a) states the general rule that persons hired by the personal representative are paid out of estate funds. This is a proper expense of administration, and is entitled to priority for payment under Section 11420.

Subdivision (b) states an exception to the rule that payment is out of estate funds where the person is hired to assist the personal representative in performing the duties the personal representative is expected to perform. Under subdivision (b), if the personal representative hires another person (including the estate attorney) to assist the personal representative in performing the duties the personal representative is expected to perform, the person hired is paid out of the personal representative's own funds. See Estate of LaMotta, 7 Cal. App. 3d 960, 86 Cal. Rptr. 880 (1970) (volunteer who found bank account of decedent not entitled to compensation out of funds of the estate because this is statutory duty of public administrator). On the other hand, if the search for estate assets had required an extraordinary effort, Section 9683 would permit the personal representative to pay the investigator out of estate funds. Likewise, the duty to prepare the accounts is a service for which the personal representative is compensated. If the personal representative hires another to keep the accounts, the personal representative must pay that person out of the personal representative's own funds. However, to the extent that the nature of the estate presents exceptionally complex accounting requirements, the person keeping the accounts may be paid out of funds of the estate. The personal representative also may pay out of the funds of the estate persons hired to assist in the operation of a business of the estate. As to court review of the propriety of paying a person hired under Section 9683 out of funds of the estate, see Section 9684 and the Comment thereto.

The estate attorney is paid out of funds of the estate except to the extent that the attorney is hired to perform the duties the personal representative is expected to perform.

The court does not review the hiring or compensation when the person hired (including the estate attorney) is paid by the personal representative from the personal representative's own funds. See Section 9684 (court review limited to cases where the person hired has been or is to be paid out of estate funds).

Subdivision (c) makes clear that a tax expert hired under Section 9680 is paid out of funds of the estate; the compensation to which the personal representative is entitled under Sections 10800-10805 is not reduced

because the tax expert is employed to assist the personal representative to perform duties in connection with taxes.

Background on Section 9683 of Repealed Code

Section 9683 was added by 1990 Cal. Stat. [AB 831]. Subdivision (b) codified a distinction that existed under prior law. Subdivision (c) restated without substantive change the second sentence of former Probate Code Section 902.

The authority to make an agreement with the estate attorney to assist the personal representative in performing the duties the personal representative is expected to perform was recognized under prior practice. See Fresno County Probate Policy Memoranda § 9.4(c), reprinted in California Local Probate Rules (10th ed., Cal. Cont. Ed. Bar 1989); Los Angeles Superior Court Guidelines on Attorney Fees in Decedents' Estates, Part E, § 11.1, supra.

The rule that the court does not review the hiring or compensation when the person hired (including the estate attorney) is paid by the personal representative from the personal representative's own funds changed the former practice in at least one court. See Fresno County Probate Policy Memoranda § 9.4(c), reprinted in California Local Probate Rules, supra (court approval of contract required). Compare Los Angeles Superior Court Guidelines on Attorney Fees in Decedents' Estates, Part E, § 11.1, reprinted in California Local Probate Rules, supra.

For background on the provisions of this chapter, see the Comment to this chapter under the chapter heading.

§ 9684. Court review of employment and compensation

Comment. Section 9684 continues Section 9684 of the repealed Probate Code without change. The section is drawn in part from Section 3-721 of the Uniform Probate Code (1987).

Section 9684 permits the personal representative and the person who will provide the services to the estate (such as an attorney) to make a fee agreement and then to obtain approval of the fee agreement prior to the performance of services. If the fee agreement is approved by the court or by the beneficiaries (either expressly or under the independent administration procedure), the agreement itself sets the rules for determining the compensation to be paid.

Section 9684 also permits an interested person to obtain review of the reasonableness of the compensation paid or to be paid to a person who has been or is to be paid out of funds of the estate. However, this review may not be obtained if the court previously has either approved the fee agreement or fixed the reasonable compensation for the services provided or to be provided. The right of an interested person to obtain court review of the reasonableness of the hiring and compensation of the person also may be limited by use of the notice of proposed action procedure under the Independent Administration of Estates Act. See Sections 10404.5, 10550, 10565, 10580(b) (notice of proposed action permitted but not required); Sections 10585.5, 10590 (effect of giving notice of proposed action).

In determining whether the compensation for the estate attorney is reasonable, the court may consider any relevant factors, including but not limited to those set out in Rule 4-200 of the Rules of Professional Conduct of the State Bar of California (fees for legal services). See subdivision (c).

Subdivision (d) avoids the need for a separate action or proceeding to recover an excess payment of compensation, thus providing a quick and efficient remedy. Where the person ordered to make the refund is the attorney for the personal representative, the court can order the refund at the same time it determines the agreed compensation is unreasonable. In other cases, the procedure in Section 9684.5 (reimbursement of excessive compensation) must be used but the hearing under Section 9684.5 can be combined with the hearing under Section 9684.

For general provisions, see Sections 1000-1004 (rules of practice), 1020-1023 (petitions and other papers), 1040-1050 (hearings and orders), 1200-1230 (notice of hearing), 1250-1252 (request for special notice), 1260-1265 (proof of giving of notice).

Section 11001 provides an alternative procedure to the procedure provided in Section 9684. Under Section 11001, the court may review, in a contest on settlement of the final account, the propriety of employment and reasonableness of compensation of any person employed under Section 9680, including the estate attorney. But see subdivision (f) of Section 9684 (binding effect of determination under Section 9684) and Sections 10585.5, 10590 (effect of giving notice of proposed action). See also Section 10900 (report of administration to show hiring and payment of persons hired under Section 9680).

If the attorney is dissatisfied with the ruling of the court, the attorney may withdraw as estate attorney. See Section 9685 (right of attorney to decline to be the attorney for the personal representative; right of attorney to withdraw as the attorney for the personal representative).

As to the law applicable to a proceeding commenced before January 1, 1991, see Section 9686. As to the application of any amendments made after that date, see Section 3.

Background on Section 9684 of Repealed Code

Section 9684 was added by 1990 Cal. Stat. [AB 831]. For background on the provisions of this chapter, see the Comment to this chapter under the chapter heading.

§ 9684.5. Reimbursement of excessive compensation

Comment. Section 9684.5 continues Section 9684.5 of the repealed Probate Code without change. It provides a procedure for obtaining an order that a person who received excessive compensation make an appropriate refund. Since the attorney for the personal representative

already is subject to court orders, the procedure provided in this section need not be followed in order to obtain an enforceable order that the attorney refund any excess compensation the attorney has received. For general provisions, see Sections 1000-1004 (rules of practice), 1020-1023 (petitions and other papers), 1040-1050 (hearings and orders), 1200-1230 (notice of hearing), 1250-1252 (request for special notice), 1260-1265 (proof of giving of notice).

Background on Section 9684.5 of Repealed Code

Section 9684.5 was a new provision added by 1990 Cal. Stat. [AB 831]. For background on the provisions of this chapter, see the Comment to this chapter under the chapter heading.

§ 9685. Attorney's right to decline employment

Comment. Section 9685 continues Section 9685 of the repealed Probate Code without change. The section makes clear that this chapter does not limit the right of the attorney to withdraw as attorney for the personal representative and to receive reasonable compensation for the legal services actually provided. The procedure to be followed by an attorney who wishes to withdraw from a probate proceeding may be governed by local court rules. See A. Marshall & A. Garb, 1 California Probate Procedure § 521 (5th ed. 1989). As to the law applicable to a proceeding commenced before January 1, 1991, see Section 9686. As to the application of any amendments made after that date, see Section 3.

Background on Section 9685 of Repealed Code

Section 9685 was a new provision added by 1990 Cal. Stat. [AB 831]. For background on the provisions of this chapter, see the Comment to this chapter under the chapter heading.

§ 9686. Application of chapter

Comment. Section 9686 continues Section 9686 of the repealed Probate Code without change. Since this chapter does not apply to proceedings commenced before January 1, 1991, the allowance of attorney fees in a proceeding commenced before January 1, 1991, is governed by the applicable law in effect before January 1, 1991. For a provision relating to the applicable law in effect before January 1, 1991, see Section 900. See also former Prob. Code §§ 900-911 (commission of personal representative and fees of estate attorney) (repealed by 1990 Cal. Stat. [AB 831]).

Likewise, conforming revisions made in Sections 7623, 7662, 7666, 8547, 9651, 10900, 10954, 11000, 11003, and 12205 do not apply in any proceeding for administration of a decedent's estate commenced before January 1, 1991. These sections, as they existed before their amendment by 1990 Cal. Stat. [AB 831] continue to apply in a proceeding

commenced before January 1, 1991, notwithstanding their amendment. See Section 900. Former Sections 900, 901, 902, 903, 904, 910, and 911 (repealed by 1990 Cal. Stat. [AB 831]) continue to apply in any proceeding commenced before January 1, 1991, notwithstanding their repeal. See Section 900.

Background on Section 9686 of Repealed Code

Section 9686 was a new provision added by 1990 Cal. Stat. [AB 831]. For background on the provisions of this chapter, see the Comment to this chapter under the chapter heading.

CHAPTER 3. DEPOSIT OF MONEY AND PERSONAL PROPERTY WITH FINANCIAL INSTITUTIONS

§ 9700. Deposit in insured account

Comment. Section 9700 continues Section 9700 of the repealed Probate Code without substantive change. The first sentence provides authority for the deposit or investment of estate money without court authorization. See Section 9610 (prior court authorization not required). The extent of the personal representative's responsibility for deposited funds is determined under Section 9600 (duty to use ordinary care and diligence). This is consistent with Section 2453 (Guardianship-Conservatorship Law). See also the Comment to Section 2453. See also Section 46 (defining "insured account in a financial institution").

If the deposit is withdrawable only upon court order, provisions for reducing the amount of the bond are found in Section 8483 and Financial Code Section 1586. See also Section 9703 (deposits withdrawable only upon court order). For provisions relating to deposits pursuant to court order, see Fin. Code § 764 (deposit with bank or trust company); Prob. Code §§ 8401, 8483 (exclusion of deposited property in computing amount of bond). See also Fin. Code §§ 6850-6851 (account of fiduciary under savings association law).

As to orders made, or actions taken, before July 1, 1988, and matters pending on July 1, 1988, see Section 9645. As to the application of any amendments made after that date, see Section 3.

Background on Section 9700 of Repealed Code

Section 9700 was added by 1987 Cal. Stat. ch. 923 § 93. The section replaced former Probate Code Section 585 (repealed by 1987 Cal. Stat. ch. 923 § 35) and expanded the deposits and investments permitted under former Section 585 to include investments in insured credit unions. This made the coverage of Section 9700 consistent with the coverage under Section 2453 (Guardianship-Conservatorship Law). The references in former Section 585 to statutory provisions that provided for the deposit or investment of money pursuant to a court order were omitted as unnecessary. The provision of former Section 585 discharging the personal representative from responsibility for deposited money until withdrawn was not continued. The extent of

the personal representative's responsibility for deposited funds is determined under Section 9600 (duty to use ordinary care and diligence).

§ 9701. Deposit of personal property with trust company

Comment. Section 9701 continues Section 9701 of the repealed Probate Code without change. The first sentence provides authority for the deposit without court authorization of personal property of the estate with a trust company (defined in Section 83). See Section 9610 (prior court authorization not required). If personal property is deposited with a trust company and the deposit is withdrawable only upon court order, provisions for reducing the amount of the bond are found in Section 8483 and Financial Code Section 1586. For other provisions relating to property deposited with a financial institution under court order, see Prob. Code §§ 8401, 9700-9705; Fin. Code § 1586. As to orders made, or actions taken, before July 1, 1988, and matters pending on July 1, 1988, see Section 9645. As to the application of any amendments made after that date, see Section 3.

Background on Section 9701 of Repealed Code

Section 9701 was added by 1987 Cal. Stat. ch. 923 § 93. The section replaced former Probate Code Section 586 (repealed by 1987 Cal. Stat. ch. 923 § 35) which permitted personal assets to be deposited with a trust company, and the bond of the personal representative reduced, "as provided by Division 1 of the Financial Code." The omission in Section 9701 of the quoted language did not change the law: If personal property is deposited with a trust company and the deposit is withdrawable only upon court order, provisions for reducing the amount of the bond are found in Section 8483 and Financial Code Section 1586. See also Section 9703 (deposits withdrawable only upon court order). For background on the provisions of this part, see the Comment to this part under the part heading.

§ 9702. Deposit of securities in securities depository

Comment. Section 9702 continues Section 9702 of the repealed Probate Code without change. The personal representative may deposit securities under subdivision (a) without prior court authorization. See Section 9610. See also Section 83 (defining "trust company"). As to orders made, or actions taken, before July 1, 1988, and matters pending on July 1, 1988, see Section 9645. As to the application of any amendments made after that date, see Section 3.

Background on Section 9702 of Repealed Code

Section 9702 was added by 1987 Cal. Stat. ch. 923 § 93. Subdivisions (a) and (c) restated former Probate Code Section 590 (repealed by 1987 Cal. Stat. ch. 923 § 35) without substantive change. Subdivision (b) also restated former Probate Code Section 586.1 (repealed by 1987 Cal. Stat. ch. 923 § 35) without substantive change. For background on the provisions of this part, see the Comment to this part under the part heading.

§ 9703. Accounts and deposits withdrawable only upon court order

Comment. Section 9703 continues Section 9703 of the repealed Probate Code without change. Where the deposit is withdrawable only upon court order, provisions for reducing the amount of the bond governed by Probate Code Section 8483 and Financial Code Section 1586. Only the personal representative may make an application under Section 9703. An interested person (such as an heir, devisee, or creditor) may neither make the application under Section 9703 nor petition for instructions under Section 9611. But see Section 9613 (right of interested person to petition for order directing personal representative in order to avoid great or irreparable injury). Section 9703 is comparable to a provision of the Guardianship-Conservatorship Law (Section 2456). As to orders made, or actions taken, before July 1, 1988, and matters pending on July 1, 1988, see Section 9645. As to the application of any amendments made after that date, see Section 3.

Background on Section 9703 of Repealed Code

Section 9703 was a new provision added by 1987 Cal. Stat. ch. 923 § 93. The section was based on authority implied under former Probate Code Sections 541.1 (repealed by 1988 Cal. Stat. ch. 1199 § 48), 585 (repealed by 1987 Cal. Stat. ch. 923 § 35), and 586 (repealed by 1987 Cal. Stat. ch. 923 § 35), except that Section 9703 included investments in shares of insured credit unions which were not included under former Sections 541.1 and 585. For background on the provisions of this part, see the Comment to this part under the part heading.

§ 9704. Direct distribution by depository

Comment. Section 9704 continues Section 9704 of the repealed Probate Code without change. As to orders made, or actions taken, before July 1, 1988, and matters pending on July 1, 1988, see Section 9645. As to the application of any amendments made after that date, see Section 3.

Background on Section 9704 of Repealed Code

Section 9704 was added by 1987 Cal. Stat. ch. 923 § 93 and was amended by 1988 Cal. Stat. ch. 1199 § 88. The section continued former Probate Code Section 586.5 (repealed by 1987 Cal. Stat. ch. 923 § 35) and expanded it to apply to all types of financial institutions where money or property may be deposited pursuant to this chapter. Former Section 586.5 applied only to a bank or trust company. For background on the provisions of this part, see the Comment to this part under the part heading.

The 1988 amendment conformed the terminology of the section to terminology used in other provisions enacted in 1988.

§ 9705. Interest on deposits by trust company

Comment. Section 9705 continues Section 9705 of the repealed Probate Code without change. The type of account into which moneys of the estate are to be deposited depends on the type of account which best

serves the needs of the estate. The time within which the estate may be distributed, the time of the receipt of the funds, and the immediate need for funds in order to meet the requirements of administration are all factors to be considered in determining the type of account in which the funds should be deposited. For example, where there is a substantial sum in excess of the immediate requirements and the sum is to be held over a period of time, the personal representative should deposit the funds in an account (which would include purchase of a certificate of deposit where appropriate under the circumstances) which not only would safeguard the funds but also allow a rate of interest on the funds that is advantageous to the estate. See In re Estate of Smith, 112 Cal. App. 680, 685-86, 297 P. 927 (1931); see also Estate of Buchman, 138 Cal. App. 2d 228, 238-39, 291 P.2d 547 (1955); Fin. Code § 6515 (saving association as personal representative); Prob. Code §§ 2453.5 (trust company as guardian or conservator), 9600 (duty of personal representative to manage estate using ordinary care and diligence), 16225 (trustee's power to deposit trust funds).

Consistent with subdivision (b) of Section 9652, subdivision (b) of Section 9705 makes clear that a noninterest bearing checking account may be maintained where it is to the advantage of the estate to do so. It may, for example, be to the advantage of the estate to maintain a noninterest bearing checking account where the net cost of a checking account that would bear interest (service charges, less interest) would be more than the cost of a checking account that would not bear interest.

As to orders made, or actions taken, before July 1, 1988, and matters pending on July 1, 1988, see Section 9645. As to the application of any amendments made after that date, see Section 3.

Background on Section 9705 of Repealed Code

Section 9705 was added by 1987 Cal. Stat. ch. 923 § 93. Subdivision (a) restated former Probate Code Section 920.5 (repealed by 1987 Cal. Stat. ch. 923 § 46) without substantive change. The reference in Section 9705 to an "association" was new. See Fin. Code § 1502 (national banking association authorized to transact trust business). Subdivision (b) was new. For background on the provisions of this part, see the Comment to this part under the part heading.

CHAPTER 4. INVESTMENTS AND PURCHASE OF PROPERTY

§ 9730. Investments permitted without prior court authorization

Comment. Section 9730 continues Section 9730 of the repealed Probate Code without substantive change. The investments described in Section 9730 may be made without prior court authorization. See Section 9610. The personal representative is required to exercise the

power granted by this section to the extent that ordinary care and diligence require that the power be exercised and may not exercise the power to the extent that ordinary care and diligence require that the power not be exercised. See Section 9600(b). As to the effect of court authorization or approval, see Section 7250. Subdivision (b) uses language comparable to that used in Section 16224 (powers of trustees). As to orders made, or actions taken, before July 1, 1988, and matters pending on July 1, 1988, see Section 9645. As to the application of any amendments made after that date, see Section 3.

Background on Section 9730 of Repealed Code

Section 9730 was added by 1987 Cal. Stat. ch. 923 § 93. Subdivision (a) continued without substantive change the portion of former Probate Code Section 584.1 (repealed by 1987 Cal. Stat. ch. 923 § 35) relating to investments in direct obligations of the United States and added authority to invest in direct obligations of the State of California maturing not later than one year from the date of making the investment. Subdivision (b) replaced a portion of former Section 584.1 (repealed by 1987 Cal. Stat. ch. 923 § 35) with language drawn from Section 16224 (powers of trustees). The words "and reinvest" which were found in former Section 584.1 were omitted as unnecessary; under Section 9730 "invest" included reinvestment. Subdivision (c) restated former Probate Code Section 585.1 (repealed by 1987 Cal. Stat. ch. 923 § 35) without substantive change. For background on the provisions of this part, see the Comment to this part under the part heading.

§ 9731. Investment in federal or state securities with court authorization

Comment. Section 9731 continues Section 9731 of the repealed Probate Code without substantive change. For general provisions, see Sections 1000-1004 (rules of practice), 1020-1023 (petitions and other papers), 1040-1050 (hearings and orders), 1200-1230 (notice of hearing), 1250-1252 (request for special notice), 1260-1265 (proof of giving of notice). As to orders made, or actions taken, before July 1, 1988, and matters pending on July 1, 1988, see Section 9645. As to the application of any amendments made after that date, see Section 3.

Background on Section 9731 of Repealed Code

Section 9731 was added by 1987 Cal. Stat. ch. 923 § 93. The section restated a portion of former Probate Code Section 584 (repealed by 1987 Cal. Stat. ch. 923 § 35) without substantive change except that (1) the order now may be obtained only pending the settlement of the estate whereas former Section 584 permitted the order also to be obtained at the time of settlement of the estate, (2) the portion of subdivision (b) stating the contents of the petition was new, and (3) subdivision (c) required that notice be given at least 15 days before the hearing pursuant to Section 1220 instead of at least 10 days before the hearing as required by former Probate Code Section 1200.5 (repealed by 1987 Cal. Stat. ch. 923 § 59).

The language of former Section 584 (repealed by 1987 Cal. Stat. ch. 923 § 35) that permitted the order to be obtained at the time of settlement of the estate was omitted from Section 9731. The omitted language appeared to be included in former Section

584 only to apply to the provision of former Section 584 that permitted the purchase of an annuity expressly granted to a legatee by the decedent's will. The omitted language was continued in Section 9733 which continued the substance of that provision of former Section 584.

For background on the provisions of this part, see the Comment to this part under the part heading.

§ 9732. Investment of money as provided in will

Comment. Section 9732 continues Section 9732 of the repealed Probate Code without substantive change. The phrase "debts (as defined in Section 11401)" has been substituted for the phrase "uncontested claims" to conform to the terminology used in the provisions relating to creditors' claims. The references to the trustee being "appointment" and to the "nomination" of the trustee have been replaced by references to the trustee having "accepted the trust" and to the person "named in the will" as trustee. These revisions reflect the fact that trusts are no longer generally under court supervision. See Sections 17300-17354. See also Sections 17000-17210 (judicial proceedings concerning trusts). For general provisions, see Sections 1000-1004 (rules of practice), 1020-1023 (petitions and other papers), 1040-1050 (hearings and orders), 1200-1230 (notice of hearing), 1250-1252 (request for special notice), 1260-1265 (proof of giving of notice).

If the money cannot be invested as provided in the will because the requirements of Section 9732 are not satisfied, the money can be invested under other provisions. See Sections 9700 (deposit in insured account), 9703 (accounts and deposits withdrawable only upon court order), 9730 (investments permitted without court authorization), 9731 (investments in federal or state securities with court authorization).

As to orders made, or actions taken, before July 1, 1988, and matters pending on July 1, 1988, see Section 9645. As to the application of any amendments made after that date, see Section 3.

Background on Section 9732 of Repealed Code

Section 9732 was added by 1987 Cal. Stat. ch. 923 § 93. The section replaced former Probate Code Sections 584.5 and 584.6 (repealed by 1987 Cal. Stat. ch. 923 § 35).

Subdivision (a) restated the first sentence of former Probate Code Section 584.5 with the substitution of "may order" for "may authorize" and the inclusion of additional language in paragraph (2) to make clear that an order may be made if the court is satisfied that all uncontested claims will be paid. The word "reinvested" which was found in the former provision was omitted as unnecessary. The limitation in the former provision that only "surplus" money could be invested was omitted as unnecessary.

Subdivision (b) restated a portion of the second sentence of former Probate Code Section 584.5 without substantive change except that the personal representative or "any interested person" is now authorized to file a petition. Former Section 584.5

permitted the personal representative to file an initial petition, while former Section 584.6 permitted any person interested to file a petition for renewal, modification, or termination of the order.

Subdivision (c) restated the fourth and fifth sentences of former Probate Code Section 584.5 (repealed by 1987 Cal. Stat. ch. 923 § 35) with the following changes:

(1) Language was added to require notice to the person nominated as trustee if a trustee has not yet been appointed for a trust that is a devisee.

(2) The former requirement that notice be mailed to all persons in being who will or may participate in the corpus or income of the trust was not continued.

(3) Notice must be given at least 15 days before the hearing pursuant to Section 1220 instead of at least 10 days before the hearing as required by former Probate Code Section 1200.5 (repealed by 1987 Cal. Stat. ch. 923 § 59).

The third sentence of former Probate Code Section 584.5, which required the clerk to set the petition for hearing by the court, was continued in former Probate Code Section 1285 (repealed by 1988 Cal. Stat. ch 1199 § 64.5), now Section 1041. The language of the fourth and fifth sentences of former Section 584.5 requiring notice to persons "whether or not they have requested special notice or given notice of appearance" was omitted as unnecessary.

Subdivision (d) restated a portion of the first sentence of former Probate Code Section 584.5 (repealed by 1987 Cal. Stat. ch. 923 § 35) (court "may" authorize) and the first and second sentences of former Probate Code Section 584.6 (repealed by 1987 Cal. Stat. ch. 923 § 35) without substantive change. The language of former Section 584.6 that "the court shall hear the petition if no objection thereto has been filed" was revised to say that the court may make an order if no objection has been filed. This revision made the language consistent with the original intent of the section. See Review of Selected 1968 Code Legislation 224 (Cal. Cont. Ed. Bar 1968).

For background on the provisions of this part, see the Comment to this part under the part heading.

§ 9733. Purchase of annuity granted in will

Comment. Section 9733 continues Section 9733 of the repealed Probate Code without substantive change. The reference to the "time of settlement of the estate" has been replaced by a more precise reference to the "time the court makes an order for final distribution of the estate." For general provisions, see Sections 1000-1004 (rules of practice), 1020-1023 (petitions and other papers), 1040-1050 (hearings and orders), 1200-1230 (notice of hearing), 1250-1252 (request for special notice), 1260-1265 (proof of giving of notice). As to orders made, or actions taken, before July 1, 1988, and matters pending on July 1, 1988, see Section 9645. As to the application of any amendments made after that date, see Section 3. As to independent administration authority, see Section 10557.

Background on Section 9733 of Repealed Code

Section 9733 was added by 1987 Cal. Stat. ch. 923 § 93. Section 9733 superseded a portion of former Probate Code Section 584 (repealed by 1987 Cal. Stat. ch. 923 § 35). Subdivision (a) made clear that an annuity may be purchased to satisfy not only a devise of an annuity as under former Section 584 but also to satisfy any other direction in the will for periodic payments to a devisee. Subdivision (b) required that notice be

given at least 15 days before the hearing pursuant to Section 1220 instead of at least 10 days before the hearing as required by former Probate Code Section 1200.5 (repealed by 1987 Cal. Stat. ch. 923 § 59). For background on the provisions of this part, see the Comment to this part under the part heading.

§ 9734. Exercise of option right

Comment. Section 9734 continues Section 9734 of the repealed Probate Code without change. The personal representative is required to exercise the power granted by this section (by filing a petition with the court) to the extent that ordinary care and diligence require that the power be exercised and may not exercise the power to the extent that ordinary care and diligence require that the power not be exercised. See Section 9600(b). For general provisions, see Sections 1000-1004 (rules of practice), 1020-1023 (petitions and other papers), 1040-1050 (hearings and orders), 1200-1230 (notice of hearing), 1250-1252 (request for special notice), 1260-1265 (proof of giving of notice). See also Sections 7250 (effect of court authorization or approval), 10202 (sale of subscription rights). As to orders made, or actions taken, before July 1, 1988, and matters pending on July 1, 1988, see Section 9645. As to the application of any amendments made after that date, see Section 3. As to independent administration authority, see Section 10558.

Background on Section 9734 of Repealed Code

Section 9734 was added by 1987 Cal. Stat. ch. 923 § 93. The section restated former Probate Code Section 584.2 (repealed by 1987 Cal. Stat. ch. 923 § 35) without the limitation of former Section 584.2 that the option right be one that "is nontransferable save only by testate or intestate succession from the decedent." In addition, subdivision (c) required that notice be given at least 15 days before the hearing pursuant to Section 1220 instead of at least 10 days before the hearing as required by former Probate Code Section 1200.5 (repealed by 1987 Cal. Stat. ch. 923 § 59). The provision of the last sentence of former Section 584.2 giving the court authority to shorten the time of notice or to dispense with notice was omitted as unnecessary because the court is given this authority by general provisions. See Sections 1203 (shortening period of notice), 1220(c) (dispensing with notice).

The requirement of former Section 584.2 that the exercise of the option right would "add value to the estate" was omitted as unnecessary, this requirement being included in the requirement of Section 9734 that exercise of the option right be "to the advantage of the estate" and "in the best interest of the interested persons."

Under subdivision (b) of Section 9734, the personal representative "or any interested person" was authorized to file a petition. Under former Section 584.2, it was unclear whether an interested person was authorized to file a petition.

The provision of former Section 584.2 that the petition shall be filed with the clerk was omitted as unnecessary. The provision of former Section 584.2 that the clerk shall set the petition for hearing by the court was continued in Section 1285 (repealed by 1988 Cal. Stat. ch 1199 § 64.5), now Section 1041.

For background on the provisions of this part, see the Comment to this part under the part heading.

§ 9735. Purchase of securities or commodities sold short

Comment. Section 9735 continues Section 9735 of the repealed Probate Code without substantive change. The personal representative is required to exercise the power granted by this section (by filing a petition with the court) to the extent that ordinary care and diligence require that the power be exercised and may not exercise the power to the extent that ordinary care and diligence require that the power not be exercised. See Section 9600(b). See also Section 7250 (effect of court authorization or approval). Only the personal representative or a party to the contract may petition under Section 9735. But see Section 9613 (interested person may petition for order directing personal representative to act or not to act upon showing that if petition is not granted estate will suffer great or irreparable injury). For general provisions, see Sections 1000-1004 (rules of practice), 1020-1023 (petitions and other papers), 1040-1050 (hearings and orders), 1200-1230 (notice of hearing), 1250-1252 (request for special notice), 1260-1265 (proof of giving of notice). As to orders made, or actions taken, before July 1, 1988, and matters pending on July 1, 1988, see Section 9645. As to the application of any amendments made after that date, see Section 3. As to independent administration authority, see Section 10559.

Background on Section 9735 of Repealed Code

Section 9735 was added by 1987 Cal. Stat. ch. 923 § 93. The section restated former Probate Code Section 771.3 (repealed by 1987 Cal. Stat. ch. 923 § 39) without substantive change, except that subdivision (b) required that notice be given at least 15 days before the hearing pursuant to Section 1220 instead of at least 10 days before the hearing as required by former Probate Code Section 1200.5 (repealed by 1987 Cal. Stat. ch. 923 § 59). The provision of the third sentence of former Section 771.3 giving the court authority to shorten the time of notice or to dispense with notice was omitted as unnecessary because the court was given this authority by general provisions. See Sections 1203 (shortening period of notice), 1220(c) (dispensing with notice). For background on the provisions of this part, see the Comment to this part under the part heading.

§ 9736. Holding securities in name of nominee or in other form

Comment. Section 9736 continues Section 9736 of the repealed Probate Code without change. This section is comparable to Section 16238 (Trust Law). See also Corp. Code § 702(a) (personal representative may vote shares without transfer into personal representative's name); Fin. Code § 1563 (trust company may register securities in name of nominee). As to orders made, or actions taken, before July 1, 1988, and matters pending on July 1, 1988, see Section 9645. As to the application of any amendments made after that date, see Section 3. As to independent administration authority, see Section 10560.

Background on Section 9736 of Repealed Code

Section 9736 was a new provision added by 1987 Cal. Stat. ch. 923 § 93. For background on the provisions of this part, see the Comment to this part under the part heading.

§ 9737. Exercise of subscription rights

Comment. Section 9737 continues Section 9737 of the repealed Probate Code without change. See also Sections 9734 (exercise of option right), 10202 (sale of subscription rights). For general provisions, see Sections 1000-1004 (rules of practice), 1020-1023 (petitions and other papers), 1040-1050 (hearings and orders), 1200-1230 (notice of hearing), 1250-1252 (request for special notice), 1260-1265 (proof of giving of notice). As to orders made, or actions taken, before July 1, 1988, and matters pending on July 1, 1988, see Section 9645. As to the application of any amendments made after that date, see Section 3. As to independent administration authority, see Section 10561.

Background on Section 9737 of Repealed Code

Section 9737 was a new provision added by 1987 Cal. Stat. ch. 923 § 93. For background on the provisions of this part, see the Comment to this part under the part heading.

CHAPTER 5. OPERATION OF DECEDENT'S BUSINESS

§ 9760. Operation of decedent's business other than partnership

Comment. Section 9760 continues Section 9760 of the repealed Probate Code without substantive change. This section does not apply to a business operated by a partnership in which the decedent was a partner. See Sections 9761-9763 (operation of decedent's partnership).

Section 9760 requires court authorization to continue operation of the decedent's nonpartnership business for a period of more than six months from the date letters are first issued to any personal representative, whether the personal representative is a special personal representative or a general personal representative. The six-month period commences to run from the time the first special or general personal representative is issued letters. The six-month limitation recognizes that operation of the business may result in the loss of estate assets if the business proves to be unprofitable.

Although Section 9760 makes clear that the personal representative may continue to operate the decedent's nonpartnership business without prior court authorization for the six-month period, it is generally advisable for the personal representative to obtain an order under Section 9760 authorizing continued operation of the business. See Gould, *First Steps in Handling A Decedent's Estate,* in 1 California Decedent Estate Practice § 2.38, at 2-48 (Cal. Cont. Ed. Bar rev. 1989). If the personal

representative operates the decedent's business without prior authorization of the court, the court may nonetheless ratify the acts and expenditures of the personal representative after the fact. See In re Estate of Maddalena, 42 Cal. App. 2d 12, 19, 108 P.2d 17 (1940). Under Section 9760, the personal representative may obtain ratification only upon the showing that it was to the advantage of the estate and in the best interest of interested persons to continue the operation of the decedent's business. See subdivision (b).

The personal representative is required to exercise the power granted by this section to the extent that ordinary care and diligence require that the power be exercised and may not exercise the power to the extent that ordinary care and diligence require that the power not be exercised. See Section 9600(b). See also Section 7250 (effect of court authorization or approval).

For general provisions, see Sections 1000-1004 (rules of practice), 1020-1023 (petitions and other papers), 1040-1050 (hearings and orders), 1200-1230 (notice of hearing), 1250-1252 (request for special notice), 1260-1265 (proof of giving of notice). As to orders made, or actions taken, before July 1, 1988, and matters pending on July 1, 1988, see Section 9645. As to the application of any amendments made after that date, see Section 3. As to independent administration authority, see Section 10534.

Background on Section 9760 of Repealed Code

Section 9760 was added by 1987 Cal. Stat. ch. 923 § 93.

Subdivision (a) was a new provision. The first portion of subdivision (a) used language taken from paragraph (6) of subdivision (b) of former Probate Code Section 591.3 (repealed by 1987 Cal. Stat. ch. 923 § 35). Subdivision (a) also made clear that Section 9760 did not apply to a business operated by a partnership in which the decedent was a partner. See Prob. Code §§ 9761-9762 (operation of decedent's partnership).

Subdivision (b) provided that the personal representative could not continue the operation of the business for a period of more than six months from the date letters were first issued unless a court order had been obtained permitting continued operation of the business. This was a new limitation. Under prior law, if the personal representative continued the operation of the decedent's business without a court order, but acted in good faith and as a cautious and prudent person would act under similar circumstances, the personal representative was not personally liable for expenses of operating the business. In re Estate of Maddalena, 42 Cal. App. 2d 12, 18, 108 P.2d 17 (1940).

Subdivisions (c) and (d) replaced a portion of the first sentence of former Probate Code Section 572 (repealed by 1987 Cal. Stat. ch. 923 § 35). Under subdivision (c) of Section 9760, the personal representative or "any interested person" was authorized to file a petition. It was unclear under former Section 572 whether an interested person was authorized to file a petition.

The requirement that notice of the hearing on the petition shall be given as provided in Probate Code Section 1220 was substituted for the requirement of former Section

572 that the order be made after notice to all persons interested in the estate, given in such manner as may be directed by the court or a judge thereof.

For background on the provisions of this part, see the Comment to this part under the part heading.

§ 9761. Account by decedent's surviving partner

Comment. Section 9761 continues Section 9761 of the repealed Probate Code without change. The standard for ordering an account is provided in the statutes governing partnerships. As to a general partnership, see Corp. Code §§ 15022 (right to formal account where "just and reasonable"), 15043 (right to account of deceased partner's interest accrues to personal representative); see also Corp. Code §§ 15019 (right to inspect partnership books), 15020 (right to information on demand). As to a limited partnership, see Corp. Code §§ 15510(1)(a)-(b) (right to information), 15521 (personal representative's exercise of rights), 15634 (right to information), 15675 (personal representative's exercise of rights). The court has jurisdiction and discretion to order any surviving partner to render an account to the extent provided in the sections of the Corporation Code referred to in Section 9761. See also Sections 1000-1004 (rules of practice).

The order to account under this section is enforceable by the power to punish for contempt under Code of Civil Procedure Section 717.010. Only the personal representative may apply for an account under Section 9761. An interested person may neither make application under this section nor petition for instructions under Section 9611. But see Section 9613 (right of interested person to petition for order directing personal representative in order to avoid great or irreparable injury).

As to orders made, or actions taken, before July 1, 1988, and matters pending on July 1, 1988, see Section 9645. As to the application of any amendments made after that date, see Section 3.

Background on Section 9761 of Repealed Code

Section 9761 was added by 1987 Cal. Stat. ch. 923 § 93. The section replaced the authority provided in former Probate Code Section 571 (repealed by 1987 Cal. Stat. ch. 923 § 35) to order an accounting where necessary and to enforce the order "by attachment." The standard for ordering an accounting is provided in the statutes governing partnerships. For background on the provisions of this part, see the Comment to this part under the part heading.

§ 9762. Personal representative continuing as partner in decedent's general partnership

Comment. Section 9762 continues Section 9762 of the repealed Probate Code without change. This section is limited to a partnership in which the decedent was a general partner at the time of the decedent's death. As to a partnership in which the decedent was a limited partner,

see Section 9763. If the court determines that notice as provided in Section 1220 is not sufficient, the court can require such further and additional notice to be given as the court considers proper. See Section 1202.

The personal representative is required to exercise the power granted by this section (by filing a petition with the court) to the extent that ordinary care and diligence require that the power be exercised and may not exercise the power to the extent that ordinary care and diligence require that the power not be exercised. See Section 9600(b). See also Section 7250 (effect of court authorization or approval).

Nothing in Section 9762 authorizes the personal representative to perform acts as a partner for which a professional license is required, or authorizes otherwise prohibited fee-sharing by a licensed professional with unlicensed persons. See, e.g., Rules of Professional Conduct of the State Bar of California, Rule 1-320 (payment of fees to deceased lawyer's estate or other specified person). Section 9762 is subject to regulatory provisions governing use of a license after death of a licensee. See, e.g., Bus. & Prof. Code § 7076 (temporary continuance of licensed contractor's business by family member of deceased licensee).

For general provisions, see Sections 1000-1004 (rules of practice), 1020-1023 (petitions and other papers), 1040-1050 (hearings and orders), 1200-1230 (notice of hearing), 1250-1252 (request for special notice), 1260-1265 (proof of giving of notice). As to orders made, or actions taken, before July 1, 1988, and matters pending on July 1, 1988, see Section 9645. As to the application of any amendments made after that date, see Section 3. As to independent administration authority, see Section 10534.

Background on Section 9762 of Repealed Code

Section 9762 was added by 1987 Cal. Stat. ch. 923 § 93. The section restated a portion of the first sentence and all of the second sentence of former Probate Code Section 572 (repealed by 1987 Cal. Stat. ch. 923 § 35) without substantive change except as indicated below.

The coverage of Section 9762 was limited to a partnership in which the decedent was a general partner at the time of the decedent's death. Insofar as former Section 572 may have applied to a partnership in which the decedent was a limited partner, the section was superseded by Section 9763.

The authority of the surviving partners under the second sentence of subdivision (a) of Section 9762 to consent to participation by the personal representative notwithstanding the terms of the partnership agreement was new. Former law did not appear to allow the personal representative to continue participation in the partnership where to do so would be inconsistent with the terms of the partnership agreement. See former Prob. Code § 572. But cf. Corp. Code § 15023 (continuation of terminated partnership).

The requirement in subdivision (d) of Section 9762 that notice of the hearing on the petition be given as provided in Probate Code Section 1220 and by mail to each of the surviving partners replaced the requirement of former Section 572 that the order be made after notice to all persons interested in the estate, given in such manner as may be directed by the court or a judge thereof.

For background on the provisions of this part, see the Comment to this part under the part heading.

§ 9763. Exercise of decedent's partnership rights by personal representative

Comment. Section 9763 continues Section 9763 of the repealed Probate Code without change. Under Section 15675 of the Corporations Code, referred to in subdivision (b) of Section 9763, court approval is not required, but the personal representative may exercise the decedent's rights only for the purpose of settling the estate. As to orders made, or actions taken, before July 1, 1988, and matters pending on July 1, 1988, see Section 9645. As to the application of any amendments made after that date, see Section 3.

Background on Section 9763 of Repealed Code

Section 9763 was added by 1987 Cal. Stat. ch. 923 § 93. Subdivision (a) restated the last part of the last sentence of subdivision (b) of former Probate Code Section 571 (repealed by 1987 Cal. Stat. ch. 923 § 35) without substantive change. Subdivision (b) replaced the provisions of former Probate Code Section 572 (repealed by 1987 Cal. Stat. ch. 923 § 35) that may have required court approval for the personal representative to exercise the decedent's rights as a limited partner. For background on the provisions of this part, see the Comment to this part under the part heading.

CHAPTER 6. ABANDONMENT OF TANGIBLE PERSONAL PROPERTY

§ 9780. Abandonment of tangible personal property

Comment. Section 9780 continues Section 9780 of the repealed Probate Code without change. This section is consistent with prior case law. See In re Estate of Barreiro, 125 Cal. App. 153, 178-79, 13 P.2d 1017 (1932). The section also is consistent with the Guardianship-Conservatorship Law (Section 2465) and with the Uniform Probate Code (§ 3-715(6), (11) (1987)). As to the construction of provisions drawn from uniform acts, see Section 2.

This chapter (commencing with Section 9780) applies only to tangible personal property. As to intangible personal property, Section 9820 gives the personal representative the power to commence and maintain actions and proceedings for the benefit of the estate. See also the Comment to Section 9820 and Section 6154 (defining "specific devise").

The personal representative is required to exercise the power granted by this chapter to the extent that ordinary care and diligence require that the power be exercised and may not exercise the power to the extent that

ordinary care and diligence require that the power not be exercised. See Section 9600(b). See also Section 7250 (effect of court authorization or approval).

As to orders made, or actions taken, before July 1, 1988, and matters pending on July 1, 1988, see Section 9645. As to the application of any amendments made after that date, see Section 3.

Background on Section 9780 of Repealed Code

Section 9780 was a new provision added by 1987 Cal. Stat. ch. 923 § 93. For background on the provisions of this part, see the Comment to this part under the part heading.

§ 9781. Court authorization or approval not required unless will otherwise provides

Comment. Section 9781 continues Section 9781 of the repealed Probate Code without change. See the Comment to Section 9780.

Background on Section 9781 of Repealed Code

Section 9781 was a new provision added by 1987 Cal. Stat. ch. 923 § 93. For background on the provisions of this part, see the Comment to this part under the part heading.

§ 9782. Notice of proposed disposition or abandonment

Comment. Section 9782 continues Section 9782 of the repealed Probate Code without substantive change. See the Comment to Section 9780. For general provisions relating to notice, see Sections 1200-1215, 1250-1252.

Background on Section 9782 of Repealed Code

Section 9782 was a new provision added by 1987 Cal. Stat. ch. 923 § 93.

§ 9783. Objection to proposed disposition or abandonment

Comment. Section 9783 continues Section 9783 of the repealed Probate Code without change. See the Comment to Section 9780. See also Section 1215 (mailing in general).

Background on Section 9783 of Repealed Code

Section 9783 was a new provision added by 1987 Cal. Stat. ch. 923 § 93.

§ 9784. Restraining order

Comment. Section 9784 continues Section 9784 of the repealed Probate Code without substantive change. See the Comment to Section 9780.

Background on Section 9784 of Repealed Code

Section 9784 was a new provision added by 1987 Cal. Stat. ch. 923 § 93.

§ 9785. Notice not required where consent or waiver

Comment. Section 9785 continues Section 9785 of the repealed Probate Code without substantive change. See the Comment to Section 9780.

Background on Section 9785 of Repealed Code

Section 9785 was a new provision added by 1987 Cal. Stat. ch. 923 § 93.

§ 9786. Notice of hearing of petition for court authorization

Comment. Section 9786 continues Section 9786 of the repealed Probate Code without change. See the Comment to Section 9780.

Background on Section 9786 of Repealed Code

Section 9786 was a new provision added by 1987 Cal. Stat. ch. 923 § 93.

§ 9787. Waiver of right to court review

Comment. Section 9787 continues Section 9787 of the repealed Probate Code without change. See the Comment to Section 9780.

Background on Section 9787 of Repealed Code

Section 9787 was a new provision added by 1987 Cal. Stat. ch. 923 § 93.

§ 9788. Tender of possession of property to person objecting

Comment. Section 9788 continues Section 9788 of the repealed Probate Code without change. See the Comment to Section 9780.

Background on Section 9788 of Repealed Code

Section 9788 was a new provision added by 1987 Cal. Stat. ch. 923 § 93.

CHAPTER 7. BORROWING, REFINANCING, AND ENCUMBERING PROPERTY

§ 9800. Borrowing money, refinancing, and encumbering property

Comment. Section 9800 continues Section 9800 of the repealed Probate Code without substantive change, except that the requirement under subdivision (c) that the written consent of the surviving spouse be obtained has been limited to the case where the loan is to be secured by the "community" real property of the estate, or any part thereof. This limitation makes clear that the consent of the surviving spouse is required only where the surviving spouse has elected to have his or her share of the community real property administered in the estate and the loan is to be secured by community real property. The consent of the surviving spouse is not required where the surviving spouse has not elected to have his or her share of the community real property administered in the estate or where the loan is to be secured by estate property that is the separate property of the decedent. Taxes owed by the decedent or the estate are included under paragraph (1) of subdivision (a) as "charges against the estate." See Section 11401(c). For a provision comparable to paragraph (3) of subdivision (a), see Section 2552 (Guardianship-Conservatorship Law). Subdivision (b) is comparable to the second sentence of subdivision (a) of Section 2551 (Guardianship-Conservatorship Law).

The personal representative is required to exercise the power granted by this section (by filing a petition with the court) to the extent that

ordinary care and diligence require that the power be exercised and may not exercise the power to the extent that ordinary care and diligence require that the power not be exercised. See Section 9600(b). See also Section 7250 (effect of court authorization or approval).

As to orders made, or actions taken, before July 1, 1988, and matters pending on July 1, 1988, see Section 9645. As to the application of any amendments made after that date, see Section 3. As to independent administration authority, see Section 10514.

Background on Section 9800 of Repealed Code

Section 9800 was added by 1987 Cal. Stat. ch. 923 § 93. Subdivision (a) restated a portion of the first sentence, and all of the third sentence, of former Probate Code Section 830 (repealed by 1987 Cal. Stat. ch. 923 § 41) without substantive change. Clarifying language was added to paragraph (1) of subdivision (a) to make clear that debts of the estate are included. Paragraph (3) of subdivision (a) was new. Subdivision (b) was drawn from the second sentence of subdivision (a) of Section 2551 (Guardianship-Conservatorship Law). Subdivision (c) was a new provision.

"Security interest" was substituted in Section 9800 for "chattel mortgage" and "pledge" which appeared in former Section 830 (repealed by 1987 Cal. Stat. ch. 923 § 41). Under the California Commercial Code, the security interest replaces the chattel mortgage and pledge. See Uniform Law Commissioners' Comment to Uniform Commercial Code Section 9-101 (1971); see also California State Bar Committee on the Commercial Code, *A Special Report, The Uniform Commercial Code*, 37 Cal. St. B.J. 117, 198-99 (1962).

The word "note" was used in Section 9800 in place of the phrase "note or notes" used in former Section 830 (repealed by 1987 Cal. Stat. ch. 923 § 41). This was not a substantive change. See Section 10 (singular number includes the plural).

For background on the provisions of this part, see the Comment to this part under the part heading.

§ 9801. Acting jointly with other owners of interests in estate property

Comment. Section 9801 continues Section 9801 of the repealed Probate Code without change. This section is comparable to subdivision (b) of Section 2552 (Guardianship-Conservatorship Law). The personal representative is required to exercise the power granted by this section (by filing a petition with the court) to the extent that ordinary care and diligence require that the power be exercised and may not exercise the power to the extent that ordinary care and diligence require that the power not be exercised. See Section 9600(b). See also Section 7250 (effect of court authorization or approval). As to orders made, or actions taken, before July 1, 1988, and matters pending on July 1, 1988, see Section 9645. As to the application of any amendments made after that date, see Section 3. As to independent administration authority, see Section 10514.

Background on Section 9801 of Repealed Code

Section 9801 was added by 1987 Cal. Stat. ch. 923 § 93. Section 9801 continued the second sentence of former Probate Code Section 830 (repealed by 1987 Cal. Stat. ch. 923 § 41) without substantive change. The word "note" was substituted in Section 9801 for the phrase "note or notes" used in former Section 830 and the word "owners" was substituted in Section 9801 for the phrase "owner or owners" used in former Section 830. These were not substantive changes. See Section 10 (singular number includes the plural, and the plural, the singular). For background on the provisions of this part, see the Comment to this part under the part heading.

§ 9802. Petition

Comment. Section 9802 continues Section 9802 of the repealed Probate Code without change. For general provisions relating to petitions, see Sections 1020-1023. As to orders made, or actions taken, before July 1, 1988, and matters pending on July 1, 1988, see Section 9645. As to the application of any amendments made after that date, see Section 3.

Background on Section 9802 of Repealed Code

Section 9802 was added by 1987 Cal. Stat. ch. 923 § 93. The section restated the first sentence of former Probate Code Section 831 (repealed by 1987 Cal. Stat. ch. 923 § 41) without substantive change. For background on the provisions of this part, see the Comment to this part under the part heading.

§ 9803. Notice of hearing

Comment. Section 9803 continues Section 9803 of the repealed Probate Code without change. For general provisions relating to notice, see Sections 1200-1230 (notice of hearing), 1250-1252 (request for special notice), 1260-1265 (proof of giving of notice). As to orders made, or actions taken, before July 1, 1988, and matters pending on July 1, 1988, see Section 9645. As to the application of any amendments made after that date, see Section 3.

Background on Section 9803 of Repealed Code

Section 9803 was added by 1987 Cal. Stat. ch. 923 § 93. The section restated the last portion of the second sentence of former Probate Code Section 831 (repealed by 1987 Cal. Stat. ch. 923 § 41) without substantive change, except that the section required that notice be given at least 15 days before the hearing pursuant to Section 1220 instead of at least 10 days before the hearing as required by former Probate Code Section 1200.5 (repealed by 1987 Cal. Stat. ch. 923 § 59). For background on the provisions of this part, see the Comment to this part under the part heading.

§ 9804. Court order

Comment. Section 9804 continues Section 9804 of the repealed Probate Code without substantive change, except that the requirement under subdivision (c) that the written consent of the surviving spouse be filed with court has been limited to the case where the loan is to be secured by the "community" real property of the estate, or any part thereof. See the discussion in the Comment to Section 9800 concerning a

similar change in that section. Paragraph (7) of subdivision (b) makes clear that the court has flexibility to fashion an appropriate order. Subdivision (c) is comparable to subdivision (c) of Section 9800. As to the recording of the order, see Section 7263. See also Sections 7250 (effect of court authorization or approval), 7260-7263 (orders and transactions affecting real property). For general provisions relating to hearings and orders, see Section 1040-1050. As to orders made, or actions taken, before July 1, 1988, and matters pending on July 1, 1988, see Section 9645. As to the application of any amendments made after that date, see Section 3. As to independent administration authority, see Section 10514.

Background on Section 9804 of Repealed Code

Section 9804 was added by 1987 Cal. Stat. ch. 923 § 93. The section restated the last portion of the first sentence of former Probate Code Section 830 and the first and second sentences of former Probate Code Section 832 (provisions repealed by 1987 Cal. Stat. ch. 923 § 41) without substantive change. The provision of former Section 832 that the court may direct in what coin or currency the loan shall be paid was omitted as obsolete. This omission was consistent with the 1982 amendment to Section 667 of the Code of Civil Procedure (1982 Cal. Stat. ch. 497 § 37). Paragraphs (5) and (6) of subdivision (b) were new and stated matters that were implied under former Section 830. Paragraph (7) was new. For background on the provisions of this part, see the Comment to this part under the part heading.

§ 9805. Execution of instrument

Comment. Section 9805 continues Section 9805 of the repealed Probate Code without change, except that subdivision (b) was revised to delete the provision relating the personal liability of the personal representative. This matter is governed by Section 9606 (liability of personal representative who signs instrument). See also Sections 7250 (effect of court authorization or approval), 7260-7263 (orders and transactions affecting real property). As to orders made, or actions taken, before July 1, 1988, and matters pending on July 1, 1988, see Section 9645. As to the application of any amendments made after that date, see Section 3. As to independent administration authority, see Section 10514.

Background on Section 9805 of Repealed Code

Section 9805 was added by 1987 Cal. Stat. ch. 923 § 93. The section restated former Probate Code Section 833 (repealed by 1987 Cal. Stat. ch. 923 § 41) without substantive change, except that Section 9805 applied to an instrument creating a security interest in personal property as well as to a mortgage or deed of trust on real property. Former Section 833 did not refer to an instrument creating a security interest in personal property. For background on the provisions of this part, see the Comment to this part under the part heading.

§ 9806. Effectiveness of encumbrance

Comment. Section 9806 continues Section 9806 of the repealed Probate Code with the addition of paragraph (3) of subdivision (a). This addition covers the situation where the community real property interest of the surviving spouse has been included in an encumbrance made pursuant to Sections 9800(c) and 9804(c). As to orders made, or actions taken, before July 1, 1988, and matters pending on July 1, 1988, see Section 9645. As to the application of any amendments made after that date, see Section 3. As to independent administration authority, see Section 10514.

Background on Section 9806 of Repealed Code

Section 9806 was added by 1987 Cal. Stat. ch. 923 § 93. The section restated without substantive change the first and second sentences and the first portion of the third sentence of former Probate Code Section 834 (repealed by 1987 Cal. Stat. ch. 923 § 41). The words "or prior thereto" which appeared in the first sentence of former Section 834 were omitted. Those words should have been deleted from Section 834 in 1931 when former Code of Civil Procedure Section 1578 (which applied not only to decedents' estates but also to estates of guardians of minors and incompetent persons) was repealed and Section 834 (which applied only to decedents' estates) was enacted. See 1931 Cal. Stat. ch. 281 §§ 834, 1533, 1538. For background on the provisions of this part, see the Comment to this part under the part heading.

§ 9807. Deficiency in case of foreclosure or sale under security interest or deed of trust

Comment. Section 9807 continues Section 9807 of the repealed Probate Code without substantive change, except that the words "and paid" are omitted from subdivision (b). Established claims referred to in subdivision (b) are paid or provided for with other established claims. See also Section 9003 (payment of established claims). As to orders made, or actions taken, before July 1, 1988, and matters pending on July 1, 1988, see Section 9645. As to the application of any amendments made after that date, see Section 3.

Background on Section 9807 of Repealed Code

Section 9807 was added by 1987 Cal. Stat. ch. 923 § 93. The section restated the last portion of the third sentence of former Probate Code Section 834 (repealed by 1987 Cal. Stat. ch. 923 § 41) without substantive change. For background on the provisions of this part, see the Comment to this part under the part heading.

CHAPTER 8. ACTIONS AND PROCEEDINGS BY OR AGAINST PERSONAL REPRESENTATIVE

§ 9820. Authority to sue and defend

Comment. Section 9820 continues Section 9820 of the repealed Probate Code without change. This section is comparable to Section 2462 (Guardianship-Conservatorship Law). The authority in subdivision

(b) for defense of actions and proceedings against the personal representative refers to actions and proceedings against the personal representative in his or her representative capacity, not those against him or her individually.

The personal representative may act under Section 9820 without prior court authorization. See Section 9610. See also Halleck v. Mixer, 16 Cal. 574, 580 (1860). The personal representative must exercise ordinary care and diligence in determining whether to exercise a power granted by Section 9820 and in exercising the power. See Section 9600. For example, the personal representative may decline to bring an action to collect property in a case where the cost of collection is likely to exceed the amount likely to be collected. See Section 9600(b). The personal representative may seek instructions from the court if in doubt as to the appropriate action to take. See Section 9611. See also Section 9613 (right of interested person to petition for order directing personal representative in order to avoid great or irreparable injury). As to the effect of court authorization or approval, see Section 7250.

Section 9820 gives authority to the personal representative to defend actions and proceedings, but procedural requirements are governed by the Code of Civil Procedure. If the defendant in a pending action dies and the cause of action survives or continues, the court in which the civil action is pending may, on motion, allow the action to be continued against the personal representative. Code Civ. Proc. § 385.

The personal representative and third party may agree to use a summary procedure for determination of a dispute. See Sections 9620 (submission to temporary judge), 9621 (submission to arbitration).

See also Sections 550-555 (liability of decedent covered by insurance), 8874 (action for double damages), 9650 (possession and management of decedent's estate), 9653 (duty to recover property transferred in fraud of creditors), 9654 (action by heirs or devisees for possession of or to quiet title to real property), 9763 (action against decedent's surviving partner), 9780 (abandonment of tangible personal property where cost of collection would exceed its value), 9823 (partition action); Code Civ. Proc. §§ 376 (action against personal representative of person causing injury to minor child), 377 (wrongful death action against personal representative of person causing death). As to orders made, or actions taken, before July 1, 1988, and matters pending on July 1, 1988, see Section 9645. As to the application of any amendments made after that date, see Section 3.

Background on Section 9820 of Repealed Code

Section 9820 was a new provision added by 1987 Cal. Stat. ch. 923 § 93. The section was consistent with prior law (see former Prob. Code §§ 573, 575, 576;

repealed by 1987 Cal. Stat. ch. 923 § 35). For background on the provisions of this part, see the Comment to this part under the part heading.

§ 9822. Action on bond of former personal representative

Comment. Section 9822 continues Section 9822 of the repealed Probate Code without change. The personal representative may act under this section without prior court authorization. See Section 9610.

The personal representative is required to exercise the power granted by this section to the extent that ordinary care and diligence require that the power be exercised and may not exercise the power to the extent that ordinary care and diligence require that the power not be exercised. See Section 9600(b). As to the effect of court authorization or approval, see Section 7250.

The authority given by Section 9822 is not exclusive: Liability on the bond of a former personal representative may be enforced on motion as well as by an action. See Code Civ. Proc. §§ 995.020, 996.440(a); Estate of Johnson, 162 Cal. App. 3d 917, 919, 208 Cal. Rptr. 821 (1984) (liability on bond determined on settlement of account).

As to orders made, or actions taken, before July 1, 1988, and matters pending on July 1, 1988, see Section 9645. As to the application of any amendments made after that date, see Section 3.

Background on Section 9822 of Repealed Code

Section 9822 was added by 1987 Cal. Stat. ch. 923 § 93. The section restated former Probate Code Section 576 (repealed by 1987 Cal. Stat. ch. 923 § 35) without substantive change. The former reference to the personal representative acting "as such" was omitted as unnecessary. For background on the provisions of this part, see the Comment to this part under the part heading.

§ 9823. Partition actions

Comment. Section 9823 continues Section 9823 of the repealed Probate Code without change. This section is a specific example of the general authority given the personal representative by Section 9820. The personal representative is required to exercise the power granted by Section 9823 to the extent that ordinary care and diligence require that the power be exercised and may not exercise the power to the extent that ordinary care and diligence require that the power not be exercised. See Section 9600(b). As to the effect of court authorization or approval, see Section 7250.

When a partition action is brought against the personal representative, the rules of venue for partition actions generally apply. See Code Civ. Proc. § 872.110.

Under subdivision (b), court authorization is not required for the personal representative to commence a partition action. See Section

9610. This continues prior law. See Review of Selected 1969 Code Legislation 187 (Cal. Cont. Ed. Bar 1969).

The personal representative and third party may agree to use a summary procedure for determination of a dispute. See Sections 9620 (submission to temporary judge), 9621 (submission to arbitration).

As to orders made, or actions taken, before July 1, 1988, and matters pending on July 1, 1988, see Section 9645. As to the application of any amendments made after that date, see Section 3.

Background on Section 9823 of Repealed Code

Section 9823 was added by 1987 Cal. Stat. ch. 923 § 93. The section continued former Probate Code Section 575 (repealed by 1987 Cal. Stat. ch. 923 § 35) without substantive change. For background on the provisions of this part, see the Comment to this part under the part heading.

CHAPTER 9. COMPROMISE OF CLAIMS AND ACTIONS; EXTENSION, RENEWAL, OR MODIFICATION OF OBLIGATIONS

§ 9830. Authority to compromise claims and actions and to extend, renew, or modify obligations

Comment. Section 9830 continues Section 9830 of the repealed Probate Code without change. This section is comparable to Section 2500 (Guardianship-Conservatorship Law). Under Section 9830, unless otherwise provided by statute, the personal representative may, but is not required to, obtain court authorization.

Section 9830 requires that the action taken be to the advantage of the estate. In addition, the personal representative must exercise ordinary care and diligence in determining whether to exercise a power granted by Section 9830 and in exercising the power. See Section 9600(b). The personal representative may seek prior authorization from the court under Sections 9836-9837 if in doubt as to the appropriate action to take. As to the effect of court authorization, see Section 7250. For other provisions that may apply to a compromise or settlement, see, e.g., Labor Code § 5001 (compromise of worker's compensation claim).

Although there is no general requirement under this chapter that authorization of the court be obtained, certain matters (specified in Sections 9831-9835) do require authorization by the court. Thus, court authorization is required if any provision of this chapter is applicable, even though court authorization might not be required under another provision of this chapter.

For example, if the compromise, modification, or release affects title to real property, court authorization is required. This scheme is comparable to that under the Guardianship-Conservatorship Law. See Sections

2500-2507. In addition, under subdivision (c) of Section 9830, the court may limit the authority of the personal representative under this section. For example, the court may require prior court authorization for any compromise or settlement of a particular matter or of a particular kind of matter. Or the court may order that no compromise or settlement be made unless it has first been authorized by the court. Under subdivision (c), a creditor or other interested person may request that the court make an order that, for example, limits the authority of the personal representative to take action under this section without prior authorization by order of the court.

For general provisions, see Sections 1000-1004 (rules of practice), 1020-1023 (petitions and other papers), 1040-1050 (hearings and orders), 1200-1230 (notice of hearing), 1250-1252 (request for special notice), 1260-1265 (proof of giving of notice). As to orders made, or actions taken, before July 1, 1988, and matters pending on July 1, 1988, see Section 9645. As to the application of any amendments made after that date, see Section 3. As to independent administration authority, see Sections 10552(b), 10554.

Background on Section 9830 of Repealed Code

Section 9830 was added by 1987 Cal. Stat. ch. 923 § 93. The section replaced the first, second, and third sentences of former Probate Code Section 578 (repealed by 1987 Cal. Stat. ch. 923 § 35) and the first sentence of former Probate Code Section 718.5 (repealed by 1987 Cal. Stat. ch. 923 § 37). For background on the provisions of this part, see the Comment to this part under the part heading.

The provisions of former Sections 578 and 718.5 authorized the personal representative to do the acts described in subdivision (a) "with the approval of the court." Under Section 9830, unless otherwise provided by statute, the personal representative may, but is not required to, obtain court authorization. By permitting but not requiring prior court authorization, Section 9830 continued prior law. See Moulton v. Holmes, 57 Cal. 337, 343-44 (1881); Estate of Coffey, 161 Cal. App. 2d 259, 264-65, 326 P.2d 511 (1958); Taylor v. Sanson, 24 Cal. App. 515, 517-18, 141 P. 1060 (1914); see also Estate of Lucas, 23 Cal. 2d 454, 463-65, 144 P.2d 340 (1943).

Chapter 9 (commencing with Section 9830) limited the authority the personal representative had under prior law to compromise claims and actions without court approval. Although there was no general requirement under Chapter 9 that authorization of the court be obtained, certain matters (specified in Sections 9831-9835) did require authorization by the court. In addition, (c) of Section 9830 provided that the court may limit the authority of the personal representative under Section 9830.

§ 9831. Compromise before time for filing creditors' claims has expired

Comment. Section 9831 continues Section 9831 of the repealed Probate Code without substantive change. This section requires authorization by order of court obtained under Sections 9836-9837 if the

compromise or settlement is to be made before the time for filing creditors' claims has expired. As to when the time for filing creditors' claims has expired, see Section 9100.

Even though the time for filing creditor claims has expired, court authorization of compromise or settlement may be required under another provision of this chapter. See Section 9830 and the Comment thereto. For example, if the transaction requires transfer of property in excess of $25,000, Section 9833 requires court consent whether or not the time for filing creditors' claims has expired. Or, if the compromise or settlement involves a claim by the estate against the personal representative, Section 9833 requires court authorization regardless of the creditors' claim filing period.

Section 9831 requires court authorization only for a compromise or settlement of a claim, action, or proceeding by or for the benefit of, or against, the decedent, the personal representative, or the estate. The section does not require court authorization in order to extend, renew, or in any manner modify the terms of an obligation owing to or running in favor of the decedent or the estate. See generally Section 9830(a)(2).

As to orders made, or actions taken, before July 1, 1988, and matters pending on July 1, 1988, see Section 9645. As to the application of any amendments made after that date, see Section 3.

Background on Section 9831 of Repealed Code

Section 9831 was added by 1987 Cal. Stat. ch. 923 § 93. The section replaced the first sentence of former Probate Code Section 718.5 (repealed by 1987 Cal. Stat. ch. 923 § 37). For background on the provisions of this part, see the Comment to this part under the part heading.

§ 9832. Matters relating to real property

Comment. Section 9832 continues Section 9832 of the repealed Probate Code without substantive change. This section is comparable to Section 2501 (Guardianship-Conservatorship Law).

Except as provided in subdivision (b), a transaction described in Section 9832 requires authorization by order of court obtained under Sections 9836-9837. Subdivision (b), which provides an exception to the requirement of court authorization, is consistent with Section 9941 (leases permitted without court authorization).

In determining whether to extend, renew, or modify a lease under subdivision (b) without prior court authorization, and in extending, renewing, or modifying the lease under that subdivision, the personal representative is required to exercise ordinary care and diligence. See Section 9600(b). As to the effect of court authorization or approval, see Section 7250.

Background on Section 9832 of Repealed Code

Section 9832 was a new provision added by 1987 Cal. Stat. ch. 923 § 93. For background on the provisions of this part, see the Comment to this part under the part heading.

§ 9833. Compromise in excess of specified amount

Comment. Section 9833 continues Section 9833 of the repealed Probate Code without change. This section is comparable to Section 2502 (Guardianship-Conservatorship Law). The section requires authorization by order of court obtained under Sections 9836-9837 where the amount to be paid or charged against the estate exceeds $25,000. Section 9833 does not apply to a claim by the estate.

Although Section 9833 does not require court authorization for a compromise or settlement where the amount to be paid or charged against the estate is not more than $25,000, another provision may require court authorization in the particular case as, for example, under Section 9832 (matter affecting real property).

As to orders made, or actions taken, before July 1, 1988, and matters pending on July 1, 1988, see Section 9645. As to the application of any amendments made after that date, see Section 3.

Background on Section 9833 of Repealed Code

Section 9833 was a new provision added by 1987 Cal. Stat. ch. 923 § 93. For background on the provisions of this part, see the Comment to this part under the part heading.

§ 9834. Claim of estate against personal representative or estate attorney; debt or obligation of personal representative or estate attorney to estate

Comment. Section 9834 continues Section 9834 of the repealed Probate Code without change. This section is comparable to Section 2503 (Guardianship-Conservatorship Law) except that Section 9834 also covers transactions involving the personal representative's attorney. Section 9834 requires authorization by order of court obtained under Sections 9836-9837 for a compromise, settlement, extension, renewal, or modification described in the section. Section 9834 requires court authorization because the section involves matters that may involve a conflict of interest for the personal representative.

The term "the personal representative's attorney" is used in a broad sense and includes the associates, partners, and attorneys of counsel with the law firm of the attorney selected by the personal representative and also associates, partners, and attorneys of counsel with other law firms associated in the estate proceeding with the firm of the attorney selected by the personal representative.

As to orders made, or actions taken, before July 1, 1988, and matters pending on July 1, 1988, see Section 9645. As to the application of any amendments made after that date, see Section 3.

Background on Section 9834 of Repealed Code

Section 9834 was a new provision added by 1987 Cal. Stat. ch. 923 § 93. For background on the provisions of this part, see the Comment to this part under the part heading.

§ 9835. Wrongful death and personal injury claims

Comment. Section 9835 continues Section 9835 of the repealed Probate Code without change. This section requires authorization by order of court obtained under Sections 9836-9837 for a compromise or settlement described in the section. For provisions giving the personal representative a right of action for wrongful death of the decedent, see Code Civ. Proc. § 377 (wrongful death of adult or certain minors); Labor Code § 2803 (wrongful death of employee). As to orders made, or actions taken, before July 1, 1988, and matters pending on July 1, 1988, see Section 9645. As to the application of any amendments made after that date, see Section 3.

Background on Section 9835 of Repealed Code

Section 9835 was added by 1987 Cal. Stat. ch. 923 § 93. The section continued the substance of the first paragraph of former Probate Code Section 578a (repealed by 1987 Cal. Stat. ch. 923 § 35). For background on the provisions of this part, see the Comment to this part under the part heading.

§ 9836. Court having authority to give authorization

Comment. Section 9836 continues Section 9836 of the repealed Probate Code without change. This section applies whether or not the claim or matter is the subject of a pending action or proceeding. As to orders made, or actions taken, before July 1, 1988, and matters pending on July 1, 1988, see Section 9645. As to the application of any amendments made after that date, see Section 3.

Background on Section 9836 of Repealed Code

Section 9836 was a new provision added by 1987 Cal. Stat. ch. 923 § 93. For background on the provisions of this part, see the Comment to this part under the part heading.

§ 9837. Petition for court authorization; notice of hearing

Comment. Section 9837 continues Section 9837 of the repealed Probate Code without change. Subdivision (a)(2) permits any interested person who has obtained the written approval of the personal representative to file the petition for an order described in the introductory portion of subdivision (a). In some cases, the personal representative may desire to have an outside party bear the legal expense

of obtaining the court approval, or the estate beneficiaries may be interested in seeking court approval of a modification. For general provisions, see Sections 1020-1023 (petitions), 1200-1230 (notice of hearing), 1250-1252 (request for special notice), 1260-1265 (proof of giving of notice). As to orders made, or actions taken, before July 1, 1988, and matters pending on July 1, 1988, see Section 9645. As to the application of any amendments made after that date, see Section 3.

Background on Section 9837 of Repealed Code

Section 9837 was added by 1987 Cal. Stat. ch. 923 § 93. The section restated the fourth and fifth sentences of former Probate Code Section 578 (repealed by 1987 Cal. Stat. ch. 923 § 35), the third and fourth sentences of former Probate Code Section 578a (repealed by 1987 Cal. Stat. ch. 923 § 35), and the second and third sentences of former Probate Code Section 718.5 (repealed by 1987 Cal. Stat. ch. 923 § 37), with the following changes:

(1) The authority for the filing of a petition by an interested person with the written approval of the personal representative was new.

(2) Subdivision (c) required that notice be given at least 15 days before the hearing pursuant to Probate Code Section 1220 instead of at least 10 days before the hearing as required by former Probate Code Section 1200.5 (repealed by 1987 Cal. Stat. ch. 923 § 59).

For background on the provisions of this part, see the Comment to this part under the part heading.

§ 9838. Transfer of property to effectuate court approved compromise or settlement

Comment. Section 9838 continues Section 9838 of the repealed Probate Code without substantive change. See also Sections 7250 (effect of court authorization or approval), 7260-7263 (orders and transactions affecting real property). As to orders made, or actions taken, before July 1, 1988, and matters pending on July 1, 1988, see Section 9645. As to the application of any amendments made after that date, see Section 3.

Background on Section 9838 of Repealed Code

Section 9838 was added by 1987 Cal. Stat. ch. 923 § 93. The section restated the fourth sentence of former Probate Code Section 718.5 (repealed by 1987 Cal. Stat. ch. 923 § 37) without substantive change. For background on the provisions of this part, see the Comment to this part under the part heading.

§ 9839. Claim paid for less than full amount

Comment. Section 9839 continues Section 9839 of the repealed Probate Code without change. As to orders made, or actions taken, before July 1, 1988, and matters pending on July 1, 1988, see Section 9645. As to the application of any amendments made after that date, see Section 3.

Background on Section 9839 of Repealed Code

Section 9839 was added by 1987 Cal. Stat. ch. 923 § 93. The section restated the second half of the first paragraph of former Probate Code Section 583 (repealed by

1987 Cal. Stat. ch. 923 § 35) without substantive change. For background on the provisions of this part, see the Comment to this part under the part heading.

CHAPTER 10. ACCEPTANCE OF DEED IN LIEU OF FORECLOSURE OR TRUSTEE'S SALE; GRANT OF PARTIAL SATISFACTION OR PARTIAL RECONVEYANCE

§ 9850. Acceptance of deed in lieu of foreclosure or trustee's sale

Comment. Section 9850 continues Section 9850 of the repealed Probate Code without change. Among the factors to be taken into consideration by the court in determining whether it is to the advantage of the estate to take a deed in lieu of foreclosure are (1) whether there are subordinate liens that will continue on the property if the deed is taken that would be eliminated if the mortgage is foreclosed or the property is sold under the deed of trust and (2) whether there is a right to a deficiency judgment that would continue if the mortgage were foreclosed and the property were to fail to yield enough to pay the amount of the encumbrance. These factors would not necessarily preclude the granting of the order, such as where the subordinate lien that would continue is for only a small amount or where the deficiency judgment would be uncollectible.

The personal representative is required to exercise the power granted by this section (by filing a petition with the court) to the extent that ordinary care and diligence require that the power be exercised. See Section 9600(b). As to the effect of court authorization or approval, see Section 7250. For general provisions, see Sections 1000-1004 (rules of practice), 1020-1023 (petitions and other papers), 1040-1050 (hearings and orders), 1200-1230 (notice of hearing), 1250-1252 (request for special notice), 1260-1265 (proof of giving of notice). As to orders made, or actions taken, before July 1, 1988, and matters pending on July 1, 1988, see Section 9645. As to the application of any amendments made after that date, see Section 3. As to independent administration authority, see Section 10563.

Background on Section 9850 of Repealed Code

Section 9850 was added by 1987 Cal. Stat. ch. 923 § 93. The section restated the substance of former Probate Code Section 718.6 (repealed by 1987 Cal. Stat. ch. 923 § 37), except that (1) Section 9850 required that the advantage to the estate be shown by clear and convincing evidence and (2) subdivision (b) of Section 9850 required that notice be given at least 15 days before the hearing pursuant to Section 1220 instead of at least 10 days before the hearing as required by former Probate Code Section 1200.5 (repealed by 1987 Cal. Stat. ch. 923 § 59). For background on the provisions of this part, see the Comment to this part under the part heading.

§ 9851. Grant of partial satisfaction or partial reconveyance

Comment. Section 9851 continues Section 9851 of the repealed Probate Code without substantive change. The personal representative is required to exercise the power granted by subdivision (a) (by filing a petition with the court) to the extent that ordinary care and diligence require that the power be exercised. See Section 9600(b). As to the effect of court authorization or approval, see Section 7250. For general provisions, see Sections 1000-1004 (rules of practice), 1020-1023 (petitions and other papers), 1040-1050 (hearings and orders), 1200-1230 (notice of hearing), 1250-1252 (request for special notice), 1260-1265 (proof of giving of notice). As to orders made, or actions taken, before July 1, 1988, and matters pending on July 1, 1988, see Section 9645. As to the application of any amendments made after that date, see Section 3. As to independent administration authority, see Section 10564.

Background on Section 9851 of Repealed Code

Section 9851 was added by 1987 Cal. Stat. ch. 923 § 93. The section restated former Probate Code Section 718.7 (repealed by 1987 Cal. Stat. ch. 923 § 37) without substantive change, except that subdivision (b) of Section 9851 required that notice be given at least 15 days before the hearing pursuant to Section 1220 instead of at least 10 days before the hearing as required by former Probate Code Section 1200.5 (repealed by 1987 Cal. Stat. ch. 923 § 59). For background on the provisions of this part, see the Comment to this part under the part heading.

CHAPTER 11. CONVEYANCE OR TRANSFER OF PROPERTY CLAIMED TO BELONG TO DECEDENT OR OTHER PERSON

§ 9860. Petition for order

Comment. Section 9860 continues Section 9860 of the repealed Probate Code without change. For a comparable provision, see Section 2520 (Guardianship-Conservatorship Law). Paragraph (4) of subdivision (a) permits the court to adjudicate claims under Sections 8870-8874 (discovery of property of decedent), and therefore overrules Laing v. Superior Court, 88 Cal. App. 2d 641, 199 P.2d 373 (1948).

The personal representative is required to exercise the power granted by this section (by filing a petition with the court) to the extent that ordinary care and diligence require that the power be exercised. See Section 9600(b). As to the effect of court authorization or approval, see Section 7250. The personal representative and third party may agree to use a summary procedure for determination of a dispute. See Sections 9620 (submission to temporary judge), 9621 (submission to arbitration).

For general provisions relating to petitions, see Sections 1020-1023. As to orders made, or actions taken, before July 1, 1988, and matters

pending on July 1, 1988, see Section 9645. As to the application of any amendments made after that date, see Section 3. As to independent administration authority, see Section 10517.

Background on Section 9860 of Repealed Code

Section 9860 was added by 1987 Cal. Stat. ch. 923 § 93. The introductory clause of subdivision (a) restated a portion of the first sentence of former Probate Code Section 851 and a portion of the first sentence of former Probate Code Section 851.5 (provisions repealed by 1987 Cal. Stat. ch. 923 § 41) without substantive change, except that under the former provisions only the personal representative and a claimant had the right to file a petition. Paragraphs (1) and (2) of subdivision (a) restated a portion of former Probate Code Section 850 (repealed by 1987 Cal. Stat. ch. 923 § 41) without substantive change. Paragraphs (3) and (4) of subdivision (a) restated a portion of the first sentence of former Section 851.5 without substantive change. Subdivision (b) restated a portion of the first sentence of former Section 851 and a portion of the first sentence of former Section 851.5 without substantive change. For background on the provisions of this part, see the Comment to this part under the part heading.

§ 9861. Notice of hearing

Comment. Section 9861 continues the substance of Section 9861 of the repealed Probate Code with the addition of subdivision (c). Notice is given under subdivision (b) only to those persons described in the subdivision who are not given notice as provided in subdivision (a). For general provisions relating to notice, see Sections 1200-1230 (notice of hearing), 1250-1252 (request for special notice), 1260-1265 (proof of giving of notice). As to orders made, or actions taken, before July 1, 1988, and matters pending on July 1, 1988, see Section 9645. As to the application of any amendments made after that date, see Section 3.

Background on Section 9861 of Repealed Code

Section 9861 was added by 1987 Cal. Stat. ch. 923 § 93. Subdivision (a) replaced the last portion of the second sentence of former Probate Code Section 851 and the fourth sentence of former Probate Code Section 851.5 (provisions repealed by 1987 Cal. Stat. ch. 923 § 41). Subdivision (a) of Section 9861 expanded the cases where service under the Code of Civil Procedure is required. Subdivision (a) required service in that manner on the personal representative (if not the petitioner) and on any person claiming an interest in or having title to or possession of the property. Under former Section 851.5, heirs and devisees (whether or not claiming an interest in the property) and the personal representative received mailed notice. Subdivision (b) replaced the third sentence of former Section 851.5. For background on the provisions of this part, see the Comment to this part under the part heading.

§ 9862. Continuance for preparation for hearing

Comment. Section 9862 continues Section 9862 of the repealed Probate Code without change. For a comparable provision, see Section 2522 (Guardianship-Conservatorship Law). For general provisions relating to rules of practice, see Sections 1000-1004. As to orders made, or actions taken, before July 1, 1988, and matters pending on July 1,

1988, see Section 9645. As to the application of any amendments made after that date, see Section 3.

Background on Section 9862 of Repealed Code

Section 9862 was added by 1987 Cal. Stat. ch. 923 § 93. The section continued the fifth sentence of former Probate Code Section 851.5 (repealed by 1987 Cal. Stat. ch. 923 § 41) without change. For background on the provisions of this part, see the Comment to this part under the part heading.

§ 9864. Denial of petition if objection based on venue

Comment. Section 9864 continues Section 9864 of the repealed Probate Code without change. For a comparable provision, see Section 2524 (Guardianship-Conservatorship Law). As to orders made, or actions taken, before July 1, 1988, and matters pending on July 1, 1988, see Section 9645. As to the application of any amendments made after that date, see Section 3.

Background on Section 9864 of Repealed Code

Section 9864 was added by 1987 Cal. Stat. ch. 923 § 93. The section restated the seventh sentence of former Probate Code Section 851.5 (repealed by 1987 Cal. Stat. ch. 923 § 41) without substantive change. For background on the provisions of this part, see the Comment to this part under the part heading.

§ 9865. Abatement of petition if civil action pending

Comment. Section 9865 continues Section 9865 of the repealed Probate Code without change. For a comparable provision, see Section 2525 (Guardianship-Conservatorship Law). Subdivision (b) codifies the rule of Richer v. Superior Court, 63 Cal. App. 3d 748, 754-57, 134 Cal. Rptr. 52 (1976). As to orders made, or actions taken, before July 1, 1988, and matters pending on July 1, 1988, see Section 9645. As to the application of any amendments made after that date, see Section 3.

Background on Section 9865 of Repealed Code

Section 9865 was added by 1987 Cal. Stat. ch. 923 § 93. Subdivision (a) restated the last sentence of former Probate Code Section 851.5 (repealed by 1987 Cal. Stat. ch. 923 § 41) with the addition of the language "upon request of any party to the civil action." Subdivision (b) was new. For background on the provisions of this part, see the Comment to this part under the part heading.

§ 9866. Denial of petition if matter should be determined by civil action

Comment. Section 9866 continues Section 9866 of the repealed Probate Code without change. For a comparable provision, see Section 2526 (Guardianship-Conservatorship Law). As to orders made, or actions taken, before July 1, 1988, and matters pending on July 1, 1988, see Section 9645. As to the application of any amendments made after that date, see Section 3.

Background on Section 9866 of Repealed Code

Section 9866 was added by 1987 Cal. Stat. ch. 923 § 93. The section restated a portion of the first sentence of former Probate Code Section 852 (repealed by 1987 Cal. Stat. ch. 923 § 41) without substantive change. For background on the provisions of this part, see the Comment to this part under the part heading.

§ 9867. Order

Comment. Section 9867 continues Section 9867 of the repealed Probate Code without change. For a comparable provision, see Section 2527 (Guardianship-Conservatorship Law). Under Section 9867, the court orders the property to be transferred to "the person entitled thereto," which may include the decedent's estate in an appropriate case. See Section 9860. See also Sections 7240 (appealable orders), 7260-7263 (orders and transactions affecting property). For general provisions relating to hearings and orders, see Section 1040-1050. As to orders made, or actions taken, before July 1, 1988, and matters pending on July 1, 1988, see Section 9645. As to the application of any amendments made after that date, see Section 3.

Background on Section 9867 of Repealed Code

Section 9867 was added by 1987 Cal. Stat. ch. 923 § 93. The section restated portions of former Probate Code Section 850 and of the first sentence of former Probate Code Section 852 (provisions repealed by 1987 Cal. Stat. ch. 923 § 41) without substantive change. For background on the provisions of this part, see the Comment to this part under the part heading.

§ 9868. Effect of order; execution and effect of conveyance or transfer

Comment. Section 9868 continues Section 9868 of the repealed Probate Code without change. For a comparable provision, see Section 2528 (Guardianship-Conservatorship Law). See also Sections 7240 (appealable orders), 7260-7263 (orders and transactions affecting property). As to orders made, or actions taken, before July 1, 1988, and matters pending on July 1, 1988, see Section 9645. As to the application of any amendments made after that date, see Section 3.

Background on Section 9868 of Repealed Code

Section 9868 was added by 1987 Cal. Stat. ch. 923 § 93. The section restated former Probate Code Section 853 (repealed by 1987 Cal. Stat. ch. 923 § 41) without substantive change. The phrase of former Section 853 "and the court may enforce its execution by process" was omitted as unnecessary. See Code Civ. Proc. § 717.010. For background on the provisions of this part, see the Comment to this part under the part heading.

CHAPTER 12. PURCHASE OF CLAIMS OR ESTATE PROPERTY BY PERSONAL REPRESENTATIVE OR PERSONAL REPRESENTATIVE'S ATTORNEY

§ 9880. Prohibition against purchase of estate property or claim against estate

Comment. Section 9880 continues Section 9880 of the repealed Probate Code without substantive change. The term "personal representative's attorney" is to be given a broad meaning for the purposes of this chapter and includes the associates, partners, and attorneys of counsel with the law firm of the attorney retained by the personal representative and also associates, partners, and attorneys of counsel with other law firms associated in the estate proceeding with the firm of the attorney retained by the personal representative. See also Section 9605 (appointment of person as personal representative does not discharge any claim the decedent has against the person). As to orders made, or actions taken, before July 1, 1988, and matters pending on July 1, 1988, see Section 9645. As to the application of any amendments made after that date, see Section 3.

Background on Section 9880 of Repealed Code

Section 9880 was added by 1987 Cal. Stat. ch. 923 § 93. The section restated the first portion of the first paragraph of former Probate Code Section 583 (repealed by 1987 Cal. Stat. ch. 923 § 35) without substantive change except that the prohibition was extended to the personal representative's attorney. For background on the provisions of this part, see the Comment to this part under the part heading.

§ 9881. Purchase with consent of heirs or devisees

Comment. Section 9881 continues Section 9881 of the repealed Probate Code without substantive change. See also Sections 7260-7263 (orders and transactions affecting property). As to orders made, or actions taken, before July 1, 1988, and matters pending on July 1, 1988, see Section 9645. As to the application of any amendments made after that date, see Section 3.

Background on Section 9881 of Repealed Code

Section 9881 was a new provision added by 1987 Cal. Stat. ch. 923 § 93. For background on the provisions of this part, see the Comment to this part under the part heading.

§ 9882. Purchase where authorized by will

Comment. Section 9882 continues Section 9882 of the repealed Probate Code without change. See also Sections 7260-7263 (orders and transactions affecting property). As to orders made, or actions taken, before July 1, 1988, and matters pending on July 1, 1988, see Section 9645. As to the application of any amendments made after that date, see Section 3.

Background on Section 9882 of Repealed Code

Section 9882 was added by 1987 Cal. Stat. ch. 923 § 93. The section superseded the first portion of the third paragraph of former Probate Code Section 583 (repealed by 1987 Cal. Stat. ch. 923 § 35) which provided that the prohibition against purchase by the personal representative did not prohibit the purchase of property of the estate by the personal representative pursuant to the will of the decedent. Section 9880 extended this prohibition against purchase to include the personal representative's attorney, and Section 9882 expanded the provision of former Section 583 to permit the court to make an order authorizing purchase by the personal representative's attorney pursuant to the will of the decedent. For background on the provisions of this part, see the Comment to this part under the part heading.

§ 9883. Petition for order under Section 9881 or 9882

Comment. Section 9883 continues Section 9883 of the repealed Probate Code without substantive change. Only the personal representative may petition under Section 9883. An interested person may neither petition under Section 9883 nor petition for instructions under Section 9611. But see Section 9613 (right of interested person to petition for order directing personal representative in order to avoid great or irreparable injury). Persons who requested special notice also must be given notice. See Sections 1250-1252. As to giving notice to known heirs and known devisees, see Section 1206. See also Sections 7260-7263 (orders and transactions affecting property). For general provisions, see Sections 1000-1004 (rules of practice), 1020-1023 (petitions and other papers), 1040-1050 (hearings and orders), 1200-1230 (notice of hearing), 1250-1252 (request for special notice), 1260-1265 (proof of giving of notice). As to orders made, or actions taken, before July 1, 1988, and matters pending on July 1, 1988, see Section 9645. As to the application of any amendments made after that date, see Section 3.

Background on Section 9883 of Repealed Code

Section 9883 was added by 1987 Cal. Stat. ch. 923 § 93. Subdivision (a) continued the substance of the first sentence of former Probate Code Section 851 (repealed by 1987 Cal. Stat. ch. 923 § 41) which was made applicable to purchases by the personal representative of estate property by the last sentence of former Probate Code Section 583 (repealed by 1987 Cal. Stat. ch. 923 § 35). Section 9883 expanded the former provision to apply to a purchase by the personal representative's attorney. See Section 9881. Subdivision (b) was new. Subdivisions (c) and (d) superseded the portion of the last sentence of former Section 583 relating to notice. The first sentence of subdivision (e) continued the substance of the last portion of the first sentence of former Probate Code Section 852 and the first portion of the second sentence of former Probate Code Section 853 (provisions repealed by 1987 Cal. Stat. ch. 923 § 41). These provisions were applied to purchases by the personal representative of estate property by the last sentence of former Section 583. The second sentence of subdivision (e) was new. For background on the provisions of this part, see the Comment to this part under the part heading.

§ 9884. Purchase pursuant to contract of decedent to sell

Comment. Section 9884 continues Section 9884 of the repealed Probate Code without change. An order authorizing the personal representative or the attorney for the personal representative to purchase property pursuant to a contract of the decedent to sell the property is obtained under Chapter 11 (commencing with Section 9860), not under this chapter. See also Section 9860(a)(1), (2). As to orders made, or actions taken, before July 1, 1988, and matters pending on July 1, 1988, see Section 9645. As to the application of any amendments made after that date, see Section 3.

Background on Section 9884 of Repealed Code

Section 9884 was added by 1987 Cal. Stat. ch. 923 § 93. The section restated a portion of the third paragraph of former Probate Code Section 583 (repealed by 1987 Cal. Stat. ch. 923 § 35) without substantive change. Language was included in Section 9884 to recognize the expansion of Sections 9880 and 9881 to cover purchases by the personal representative's attorney. For background on the provisions of this part, see the Comment to this part under the part heading.

§ 9885. Option to purchase given in will

Comment. Section 9885 continues Section 9885 of the repealed Probate Code without change. An order authorizing the personal representative or the attorney for the personal representative to exercise an option to purchase property of the estate is obtained under Chapter 17 (commencing with Section 9980), not under this chapter. Under Section 9981, the decedent's will must have been admitted to probate. As to orders made, or actions taken, before July 1, 1988, and matters pending on July 1, 1988, see Section 9645. As to the application of any amendments made after that date, see Section 3.

Background on Section 9885 of Repealed Code

Section 9885 was added by 1987 Cal. Stat. ch. 923 § 93. The section restated the second paragraph of former Probate Code Section 583 (repealed by 1987 Cal. Stat. ch. 923 § 35) without substantive change. Language was included in Section 9885 to recognize the expansion of Sections 9880 and 9881 to cover purchases by the personal representative's attorney. For background on the provisions of this part, see the Comment to this part under the part heading.

CHAPTER 13. DEDICATION OR CONVEYANCE TO GOVERNMENTAL ENTITY; EASEMENTS AND ACCESS RIGHTS

§ 9900. Dedication or conveyance of real property to governmental entity; dedication or conveyance of easement; conveyance or release of access rights

Comment. Section 9900 continues Section 9900 of the repealed Probate Code without change. The authority in subdivision (a) for the dedication or conveyance of real property of the estate includes the entire interest or any lesser interest in the property. Section 9900 is similar to subdivision (a) of Section 2556 (Guardianship-Conservatorship Law).

The personal representative is required to exercise the power granted by this section (by filing a petition with the court) to the extent that ordinary care and diligence require that the power be exercised. See Section 9600(b). As to the effect of court authorization or approval, see Section 7250. See also Sections 7260-7263 (orders and transactions affecting property).

As to orders made, or actions taken, before July 1, 1988, and matters pending on July 1, 1988, see Section 9645. As to the application of any amendments made after that date, see Section 3.

Background on Section 9900 of Repealed Code

Section 9900 was added by 1987 Cal. Stat. ch. 923 § 93. The section restated a portion of former Probate Code Section 587 (repealed by 1987 Cal. Stat. ch. 923 § 35) with the following changes:

(1) Language was added to Section 9900 to recognize that the court may prescribe terms and conditions in its order.

(2) Subdivision (d) of Section 9900 was new.

(3) In the introductory clause of Section 9900, "advantage of the estate and in the best interest of the interested persons" was substituted for "advantage, benefit, and best interest of the estate, and those interested therein" which was used in former Section 587. This change was nonsubstantive.

For background on the provisions of this part, see the Comment to this part under the part heading.

§ 9901. Petition; notice of hearing

Comment. Section 9901 continues Section 9901 of the repealed Probate Code without change. See also Sections 7260-7263 (orders and transactions affecting property). For general provisions, see Sections 1000-1004 (rules of practice), 1020-1023 (petitions and other papers), 1040-1050 (hearings and orders), 1200-1230 (notice of hearing), 1250-1252 (request for special notice), 1260-1265 (proof of giving of notice). As to orders made, or actions taken, before July 1, 1988, and matters pending on July 1, 1988, see Section 9645. As to the application of any amendments made after that date, see Section 3.

Background on Section 9901 of Repealed Code

Section 9901 was added by 1987 Cal. Stat. ch. 923 § 93. The section restated a portion of former Probate Code Section 587 (repealed by 1987 Cal. Stat. ch. 923 § 35) without substantive change except that subdivision (b) of Section 9901 required that notice be given at least 15 days before the hearing pursuant to Section 1220 instead of at least 10 days before the hearing as required by former Probate Code Section 1200.5 (repealed by 1987 Cal. Stat. ch. 923 § 59). For background on the provisions of this part, see the Comment to this part under the part heading.

CHAPTER 14. EXCHANGE OF PROPERTY

§ 9920. Court authorization for exchange

Comment. Section 9920 continues Section 9920 of the repealed Probate Code without substantive change. Section 9920 is similar to subdivision (a) of Section 2557 (Guardianship-Conservatorship Law). The personal representative is required to exercise the power granted by Section 9920 (by filing a petition with the court) to the extent that ordinary care and diligence require that the power be exercised. See Section 9600(b). As to the effect of court authorization, see Section 7250. See also Sections 7260-7263 (orders and transactions affecting property). As to orders made, or actions taken, before July 1, 1988, and matters pending on July 1, 1988, see Section 9645. As to the application of any amendments made after that date, see Section 3.

Background on Section 9920 of Repealed Code

Section 9920 was added by 1987 Cal. Stat. ch. 923 § 93. The section restated a portion of the first sentence of former Probate Code Section 860 (repealed by 1987 Cal. Stat. ch. 923 § 41) without substantive change. The language "advantage of the estate" was substituted for the former language "advantage or best interests of the estate." This change was nonsubstantive. For background on the provisions of this part, see the Comment to this part under the part heading.

§ 9921. Petition

Comment. Section 9921 continues Section 9921 of the repealed Probate Code without substantive change. For general provisions relating to petitions, see Sections 1020-1023. As to orders made, or actions taken, before July 1, 1988, and matters pending on July 1, 1988, see Section 9645. As to the application of any amendments made after that date, see Section 3. As to independent administration authority, see Section 10537.

Background on Section 9921 of Repealed Code

Section 9921 was added by 1987 Cal. Stat. ch. 923 § 93. The section restated a portion of the first sentence of former Probate Code Section 860 (repealed by 1987 Cal. Stat. ch. 923 § 41) without substantive change. The requirement that the petition contain a description of the property and the terms and conditions of the proposed exchange was new. The phrase "advantage of the estate" was substituted for the former phrase "advantage or best interests of the estate." This change was nonsubstantive. For background on the provisions of this part, see the Comment to this

part under the part heading.

§ 9922. Notice of hearing

Comment. Section 9922 continues Section 9922 of the repealed Probate Code without change. Subdivision (b) of Section 9922 is comparable to subdivision (c) of Section 2557 (Guardianship-Conservatorship Law). For general provisions relating to notice, see Sections 1200-1230 (notice of hearing), 1250-1252 (request for special notice), 1260-1265 (proof of giving of notice). As to orders made, or actions taken, before July 1, 1988, and matters pending on July 1, 1988, see Section 9645. As to the application of any amendments made after that date, see Section 3.

Background on Section 9922 of Repealed Code

Section 9922 was added by 1987 Cal. Stat. ch. 923 § 93. The section restated the second and third sentences of former Probate Code Section 860 (repealed by 1987 Cal. Stat. ch. 923 § 41) without substantive change, except that subdivision (a) of Section 9922 required that notice be given at least 15 days before the hearing pursuant to Section 1220 instead of at least 10 days before the hearing as required by former Probate Code Section 1200.5 (repealed by 1987 Cal. Stat. ch. 923 § 59). The last sentence of subdivision (b) was new. For background on the provisions of this part, see the Comment to this part under the part heading.

§ 9923. Error does not invalidate proceedings

Comment. Section 9923 continues Section 9923 of the repealed Probate Code without change. This section is comparable to Sections 9948(d) (leases), 9966 (option to purchase real property), 9983 (option to purchase given in will), 10264 (sale of personal property), and 10316 (sale of real property). See also Sections 7260-7263 (orders and transactions affecting property).

If the court lacks jurisdiction, Section 9923 does not cure the defect. See Texas Co. v. Bank of America Nat'l Trust & Sav. Ass'n, 5 Cal. 2d 35, 41-44, 53 P.2d 127 (1935). Section 9923 does not limit the court's authority to set aside an order made through mistake, inadvertence, surprise, or excusable neglect. See Code Civ. Proc. § 473; Estate of Lee, 159 Cal. App. 2d 109, 111-12, 323 P.2d 448 (1958); Estate of Herz, 147 Cal. App. 2d 100, 106-07, 305 P.2d 278 (1956); Estate of McCrae, 133 Cal. App. 2d 634, 637-39, 284 P.2d 914 (1955); Estate of Moreland, 49 Cal. App. 2d 484, 487-88, 121 P.2d 867 (1942). As to orders made, or actions taken, before July 1, 1988, and matters pending on July 1, 1988, see Section 9645. As to the application of any amendments made after that date, see Section 3.

Background on Section 9923 of Repealed Code

Section 9923 was a new provision added by 1987 Cal. Stat. ch. 923 § 93. For background on the provisions of this part, see the Comment to this part under the part heading.

CHAPTER 15. LEASES

§ 9940. Effect of including option to purchase in lease

Comment. Section 9940 continues Section 9940 of the repealed Probate Code without change. Subdivision (b) is consistent with Section 10203(b)(1) (sale of leasehold interest). As to orders made, or actions taken, before July 1, 1988, and matters pending on July 1, 1988, see Section 9645. As to the application of any amendments made after that date, see Section 3.

Background on Section 9940 of Repealed Code

Section 9940 was added by 1987 Cal. Stat. ch. 923 § 93. Subdivision (a) restated the first portion of former Probate Code Section 845 (repealed by 1987 Cal. Stat. ch. 923 § 41) without substantive change. Subdivision (b) was new. For background on the provisions of this part, see the Comment to this part under the part heading.

§ 9941. Leases permitted without court authorization

Comment. Section 9941 continues Section 9941 of the repealed Probate Code without change. The personal representative may act under Section 9941 without prior court authorization, but the personal representative must exercise ordinary care and diligence in determining whether or not to lease the real property and in the leasing of the property. See Section 9600(b). The personal representative may seek approval from the court under Sections 9943-9947 if in doubt as to the appropriate action to take. As to the effect of court authorization, see Section 7250. For a similar provision, see Section 2555 (Guardianship-Conservatorship Law). If the lease gives the lessee an option to extend the lease beyond a one-year term, court approval of the lease is required. See Sections 9940(b), 9941-9942. As to orders made, or actions taken, before July 1, 1988, and matters pending on July 1, 1988, see Section 9645. As to the application of any amendments made after that date, see Section 3. As to independent administration authority, see Section 10536.

Background on Section 9941 of Repealed Code

Section 9941 was added by 1987 Cal. Stat. ch. 923 § 93. The section superseded former Probate Code Section 844 (repealed by 1987 Cal. Stat. ch. 923 § 41). Subdivision (a) of Section 9941 increased the maximum rental under former Probate Code Section 844 from $250 a month to $1,500 a month. Court supervision for leases for less than $1,500 a month added little protection to the estate, since overbids on these leases were rare and the one-year maximum limit on the lease term ensures that the lease will terminate before or soon after distribution of the average estate. See *Review of 1963 Code Legislation*, 38 Cal. St. B.J. 601, 777 (1963). For background on the provisions of this part, see the Comment to this part under the part heading.

§ 9942. Court authorization for lease; proposed lease that includes option to purchase

Comment. Section 9942 continues Section 9942 of the repealed Probate Code without change. The personal representative is required to exercise the power granted by this section (by filing a petition with the court) to the extent that ordinary care and diligence require that the power be exercised. See Section 9600(b). As to the effect of court authorization or approval, see Section 7250. As to orders made, or actions taken, before July 1, 1988, and matters pending on July 1, 1988, see Section 9645. As to the application of any amendments made after that date, see Section 3. As to independent administration authority, see Section 10536.

Background on Section 9942 of Repealed Code

Section 9942 was added by 1987 Cal. Stat. ch. 923 § 93. Subdivision (a) restated former Probate Code Section 840 (repealed by 1987 Cal. Stat. ch. 923 § 41) without substantive change. Subdivision (b) restated former Probate Code Section 845 (repealed by 1987 Cal. Stat. ch. 923 § 41) without substantive change. For background on the provisions of this part, see the Comment to this part under the part heading.

§ 9943. Petition for order

Comment. Section 9943 continues Section 9943 of the repealed Probate Code without substantive change. For a comparable provision, see Section 2553(b) (Guardianship-Conservatorship Law). For general provisions relating to petitions, see Sections 1020-1023. As to orders made, or actions taken, before July 1, 1988, and matters pending on July 1, 1988, see Section 9645. As to the application of any amendments made after that date, see Section 3.

Background on Section 9943 of Repealed Code

Section 9943 was added by 1987 Cal. Stat. ch. 923 § 93. Subdivision (a) restated the first sentence of former Probate Code Section 841 (repealed by 1987 Cal. Stat. ch. 923 § 41) without substantive change. Subdivision (b) restated a portion of the first sentence of former Probate Code Section 842.1 (repealed by 1987 Cal. Stat. ch. 923 § 41) without substantive change. For background on the provisions of this part, see the Comment to this part under the part heading.

§ 9944. Notice of hearing

Comment. Section 9944 continues Section 9944 of the repealed Probate Code without substantive change. For general provisions relating to notice, see Sections 1200-1230 (notice of hearing), 1250-1252 (request for special notice), 1260-1265 (proof of giving of notice). As to orders made, or actions taken, before July 1, 1988, and matters pending on July 1, 1988, see Section 9645. As to the application of any amendments made after that date, see Section 3.

Background on Section 9944 of Repealed Code

Section 9944 was added by 1987 Cal. Stat. ch. 923 § 93. Subdivisions (a) and (b) restated a portion of the second sentence and all of the third sentence of former Probate Code Section 841 (repealed by 1987 Cal. Stat. ch. 923 § 41) without substantive change, except that (1) subdivision (a) of Section 9944 required that notice be given at least 15 days before the hearing pursuant to Section 1220 instead of at least 10 days before the hearing as required by former Probate Code Section 1200.5 (repealed by 1987 Cal. Stat. ch. 923 § 59) and (2) the provision in subdivision (b) dispensing with notice was expanded to include the case where the will authorizes or directs sale of the property as well as authorizing or directing its leasing.

Subdivision (c) restated the second sentence of former Probate Code Section 842.1 (repealed by 1987 Cal. Stat. ch. 923 § 41) without substantive change except that subdivision (c) of Section 9944 required that notice be given at least 15 days before the hearing instead of at least 20 days before the hearing as required under former Section 842.1. The authority under former Section 842.1 for the court to require additional notice was omitted as unnecessary in view of the general provision which gives the court this authority. See Section 1202.

For background on the provisions of this part, see the Comment to this part under the part heading.

§ 9945. Hearing and order

Comment. Section 9945 continues Section 9945 of the repealed Probate Code without change. For general provisions relating to hearings and orders, see Section 1040-1050. As to the effect of court authorization or approval, see Section 7250. See also Sections 7260-7263 (orders and transactions affecting property). For a comparable provision, see Section 2553 (Guardianship-Conservatorship Law). As to orders made, or actions taken, before July 1, 1988, and matters pending on July 1, 1988, see Section 9645. As to the application of any amendments made after that date, see Section 3.

Background on Section 9945 of Repealed Code

Section 9945 was added by 1987 Cal. Stat. ch. 923 § 93. The section restated the first sentence of former Probate Code Section 842 (repealed by 1987 Cal. Stat. ch. 923 § 41), and a portion of the first sentence of former Probate Code Section 842.1 (repealed by 1987 Cal. Stat. ch. 923 § 41), without substantive change. For background on the provisions of this part, see the Comment to this part under the part heading.

§ 9946. Terms and conditions of leases

Comment. Section 9946 continues Section 9946 of the repealed Probate Code without change. As to the maximum term of the lease, see Section 9947. For comparable provisions, see Section 2554(a)-(c) (Guardianship-Conservatorship Law). As to orders made, or actions taken, before July 1, 1988, and matters pending on July 1, 1988, see Section 9645. As to the application of any amendments made after that date, see Section 3. As to independent administration authority, see Section 10536.

Background on Section 9946 of Repealed Code

Section 9946 was added by 1987 Cal. Stat. ch. 923 § 93. The section restated a portion of the second and all of the third and fourth sentences of former Probate Code Section 842 (repealed by 1987 Cal. Stat. ch. 923 § 41) without substantive change. The reference in subdivision (b) to geothermal energy and to a community oil lease was new. For background on the provisions of this part, see the Comment to this part under the part heading.

§ 9947. Maximum term of lease

Comment. Section 9947 continues Section 9947 of the repealed Probate Code without substantive change. Subdivision (c) of Section 9947 is comparable to subdivision (d) of Section 2554 (Guardianship-Conservatorship Law). As to orders made, or actions taken, before July 1, 1988, and matters pending on July 1, 1988, see Section 9645. As to the application of any amendments made after that date, see Section 3. As to independent administration authority, see Section 10536.

Background on Section 9947 of Repealed Code

Section 9947 was added by 1987 Cal. Stat. ch. 923 § 93. Subdivisions (a) and (b) restated without substantive change the portion of the second sentence of former Probate Code Section 842 that concerned the period of the lease and the third sentence of former Probate Code Section 842.1 (provisions repealed by 1987 Cal. Stat. ch. 923 § 41). Subdivision (c) restated the fifth sentence of former Section 842 (repealed by 1987 Cal. Stat. ch. 923 § 41) without substantive change. The reference to geothermal energy was new. For background on the provisions of this part, see the Comment to this part under the part heading.

§ 9948. Execution and effectiveness of lease

Comment. Section 9948 continues Section 9948 of the repealed Probate Code without substantive change. A certified copy of the order must be recorded. See Section 7263. See generally Sections 7260-7263 (orders and transactions affecting property).

If the court lacks jurisdiction, subdivision (d) does not cure the defect. See Texas Co. v. Bank of America Nat'l Trust & Sav. Ass'n, 5 Cal. 2d 35, 41-44, 53 P.2d 127 (1935). Subdivision (d) does not limit the court's authority to set aside an order made through mistake, inadvertence, surprise, or excusable neglect. See Code Civ. Proc. § 473; Estate of Lee, 159 Cal. App. 2d 109, 111-12, 323 P.2d 448 (1958); Estate of Herz, 147 Cal. App. 2d 100, 106-07, 305 P.2d 278 (1956); Estate of McCrae, 133 Cal. App. 2d 634, 637-39, 284 P.2d 914 (1955); Estate of Moreland, 49 Cal. App. 2d 484, 487-88, 121 P.2d 867 (1942). For provisions comparable to subdivision (d), see Sections 9923 (exchanges), 9966 (option to purchase real property), 9983 (option to purchase given in will), 10264 (sale of personal property), 10316 (sale of real property). For a comparable provision of the Guardianship-Conservatorship Law, see Section 2553(d).

Section 9948 does not deal with the rights of the lessee and a subsequent lessee or purchaser of the property except to the extent that the section protects the lessee from a claim by a third party that there was an omission, error, or irregularity in the proceedings under this chapter. Section 9948 is limited to defining the relationship between the personal representative and the beneficiaries and creditors of the estate, the relationship between the personal representative and the lessee, and the relationship between the personal representative and the court from which the authority of the personal representative is derived.

As to orders made, or actions taken, before July 1, 1988, and matters pending on July 1, 1988, see Section 9645. As to the application of any amendments made after that date, see Section 3.

Background on Section 9948 of Repealed Code

Section 9948 was added by 1987 Cal. Stat. ch. 923 § 93. Subdivisions (a), (b), and (c) restated the first, second, and third sentences of former Probate Code Section 843 (repealed by 1987 Cal. Stat. ch. 923 § 41) without substantive change. Subdivision (d) restated the last sentence of former Section 843 without substantive change. For background on the provisions of this part, see the Comment to this part under the part heading.

CHAPTER 16. GRANTING OPTION TO PURCHASE REAL PROPERTY

§ 9960. Authority to grant option

Comment. Section 9960 continues Section 9960 of the repealed Probate Code without change. The personal representative is required to exercise the power granted by this section (by filing a petition with the court) to the extent that ordinary care and diligence require that the power be exercised. See Section 9600(b). As to the effect of court authorization or approval, see Section 7250. A certified copy of the order must be recorded. Section 7263. See generally Sections 7260-7263 (orders and transactions affecting property). As to orders made, or actions taken, before July 1, 1988, and matters pending on July 1, 1988, see Section 9645. As to the application of any amendments made after that date, see Section 3. As to independent administration authority, see Section 10515.

Background on Section 9960 of Repealed Code

Section 9960 was added by 1987 Cal. Stat. ch. 923 § 93. The section restated the first sentence of former Probate Code Section 584.3 (repealed by 1987 Cal. Stat. ch. 923 § 35) without substantive change. For background on the provisions of this part, see the Comment to this part under the part heading.

§ 9961. Petition

Comment. Section 9961 continues Section 9961 of the repealed Probate Code without substantive change. Only the personal

representative may file a petition under this section. An interested person may neither petition under this section nor petition for instructions under Section 9611. But see Section 9613 (right of interested person to petition for order directing personal representative in order to avoid great or irreparable injury). For general provisions relating to petitions, see Sections 1020-1023. As to orders made, or actions taken, before July 1, 1988, and matters pending on July 1, 1988, see Section 9645. As to the application of any amendments made after that date, see Section 3.

Background on Section 9961 of Repealed Code

Section 9961 was added by 1987 Cal. Stat. ch. 923 § 93. The section restated subdivision (a) of former Probate Code Section 584.3 (repealed by 1987 Cal. Stat. ch. 923 § 35) without substantive change. For background on the provisions of this part, see the Comment to this part under the part heading.

§ 9962. Minimum purchase price

Comment. Section 9962 continues Section 9962 of the repealed Probate Code, with a revision incorporating the appraisal procedure of Section 10309(c). Under that provision, if a new appraisal is needed, the new appraisal need not be made by a probate referee if the original appraisal of the property was made by a person other than a probate referee. If the original appraisal of the property was made by a probate referee, the new appraisal may be made by the probate referee who made the original appraisal without further order of the court or further request for the appointment of a new probate referee. If appraisal by a probate referee is required, a new probate referee must be appointed, using the same procedure as for the appointment of an original referee, to make the new appraisal if the original probate referee is dead, has been removed, or is otherwise unable to act, or if there is other reason to appoint another probate referee. The requirement that the appraisal be made within one year prior to the hearing of the petition is consistent with the requirement of Section 10309(a)(1) (minimum price for private sale of real property). The requirement that the purchase price be at least 90 percent of appraised value is consistent with the general provision prescribing the minimum price for private sales of real property. See Section 10309. As to orders made, or actions taken, before July 1, 1988, and matters pending on July 1, 1988, see Section 9645. As to the application of any amendments made after that date, see Section 3.

Background on Section 9962 of Repealed Code

Section 9962 was added by 1987 Cal. Stat. ch. 923 § 93. The section restated subdivision (b) of former Probate Code Section 584.3 (repealed by 1987 Cal. Stat. ch. 923 § 35) without substantive change except that a requirement that the appraisal be made within one year prior to the hearing of the petition was substituted for the former requirement that the appraisal be made within 90 days prior to the filing of the petition. This substitution made Section 9962 consistent with the requirement of Section

10309(a)(1) (minimum price for private sale of real property). For background on the provisions of this part, see the Comment to this part under the part heading.

§ 9963. Notice of hearing

Comment. Section 9963 continues Section 9963 of the repealed Probate Code without substantive change. For general provisions relating to notice, see Sections 1200-1230 (notice of hearing), 1250-1252 (request for special notice), 1260-1265 (proof of giving of notice). As to orders made, or actions taken, before July 1, 1988, and matters pending on July 1, 1988, see Section 9645. As to the application of any amendments made after that date, see Section 3.

Background on Section 9963 of Repealed Code

Section 9963 was added by 1987 Cal. Stat. ch. 923 § 93. The section restated subdivision (c) of former Probate Code Section 584.3 (repealed by 1987 Cal. Stat. ch. 923 § 35) without substantive change, except that:

(1) Section 9963 required notice by mail (Section 1220) in addition to the notice by posting (Section 1230) which was required by former Section 584.3.

(2) Section 9963 required notice to be mailed at least 15 days before the hearing as provided in Section 1220 instead of at least 10 days before the hearing as required under subdivision (c) of former Section 584.3.

(3) Section 9963 limited the giving of notice to known heirs and known devisees to those "whose interest in the estate would be affected by the granting of the option."

For background on the provisions of this part, see the Comment to this part under the part heading.

§ 9964. Order

Comment. Section 9964 continues Section 9964 of the repealed Probate Code without change. For general provisions relating to hearings and orders, see Section 1040-1050. As to orders made, or actions taken, before July 1, 1988, and matters pending on July 1, 1988, see Section 9645. As to the application of any amendments made after that date, see Section 3.

Background on Section 9964 of Repealed Code

Section 9964 was added by 1987 Cal. Stat. ch. 923 § 93. The section restated the second, third, and fourth sentences of subdivision (d) of former Probate Code Section 584.3 (repealed by 1987 Cal. Stat. ch. 923 § 35) without substantive change. For background on the provisions of this part, see the Comment to this part under the part heading.

§ 9965. Expiration of record of recorded option

Comment. Section 9965 continues Section 9965 of the repealed Probate Code without change. If an option granted pursuant to this chapter is recorded, the option expires of record unless a notice of exercise or an extension of the option is recorded within six months after the option expires according to its terms or, if the option has no expiration date, within six months after the option is recorded. Civil

Code § 884.010. As to orders made, or actions taken, before July 1, 1988, and matters pending on July 1, 1988, see Section 9645. As to the application of any amendments made after that date, see Section 3.

Background on Section 9965 of Repealed Code

Section 9965 was added by 1987 Cal. Stat. ch. 923 § 93. The section restated the second sentence of subdivision (e) of former Probate Code Section 584.3 (repealed by 1987 Cal. Stat. ch. 923 § 35) without substantive change. For background on the provisions of this part, see the Comment to this part under the part heading.

§ 9966. Error does not invalidate proceedings

Comment. Section 9966 continues Section 9966 of the repealed Probate Code without change. This section is comparable to Sections 9923 (exchanges), 9948(d) (leases), 9983 (option to purchase given in will), 10264 (sale of personal property), and 10316 (sale of real property).

If the court lacks jurisdiction, Section 9966 does not cure the defect. See Texas Co. v. Bank of America Nat'l Trust & Sav. Ass'n, 5 Cal. 2d 35, 41-44, 53 P.2d 127 (1935). Section 9966 does not limit the court's authority to set aside an order made through mistake, inadvertence, surprise, or excusable neglect. See Code Civ. Proc. § 473; Estate of Lee, 159 Cal. App. 2d 109, 111-12, 323 P.2d 448 (1958); Estate of Herz, 147 Cal. App. 2d 100, 106-07, 305 P.2d 278 (1956); Estate of McCrae, 133 Cal. App. 2d 634, 637-39, 284 P.2d 914 (1955); Estate of Moreland, 49 Cal. App. 2d 484, 487-88, 121 P.2d 867 (1942).

As to orders made, or actions taken, before July 1, 1988, and matters pending on July 1, 1988, see Section 9645. As to the application of any amendments made after that date, see Section 3.

Background on Section 9966 of Repealed Code

Section 9966 is a new provision added by 1987 Cal. Stat. ch. 923 § 93. For background on the provisions of this part, see the Comment to this part under the part heading.

CHAPTER 17. OPTION TO PURCHASE GIVEN IN WILL

§ 9980. Option to purchase given in will

Comment. Section 9980 continues Section 9980 of the repealed Probate Code without change. As to orders made, or actions taken, before July 1, 1988, and matters pending on July 1, 1988, see Section 9645. As to the application of any amendments made after that date, see Section 3.

Background on Section 9980 of Repealed Code

Section 9980 was added by 1987 Cal. Stat. ch. 923 § 93. Subdivision (a) restated subdivision (a) of former Probate Code Section 854 (repealed by 1987 Cal. Stat. ch. 923 § 41) without substantive change. Subdivision (b) restated subdivision (d) of former Section 854 without change. Subdivision (c) restated subdivision (c) of former

Section 854 without substantive change. For background on the provisions of this part, see the Comment to this part under the part heading.

§ 9981. Order; petition; notice of hearing

Comment. Section 9981 continues Section 9981 of the repealed Probate Code without change. For general provisions, see Sections 1000-1004 (rules of practice), 1020-1023 (petitions and other papers), 1040-1050 (hearings and orders), 1200-1230 (notice of hearing), 1250-1252 (request for special notice), 1260-1265 (proof of giving of notice). As to orders made, or actions taken, before July 1, 1988, and matters pending on July 1, 1988, see Section 9645. As to the application of any amendments made after that date, see Section 3. As to independent administration authority, see Section 10516.

Background on Section 9981 of Repealed Code

Section 9981 was added by 1987 Cal. Stat. ch. 923 § 93. Subdivisions (a) and (b) restated the first sentence of subdivision (b) of former Probate Code Section 854 (repealed by 1987 Cal. Stat. ch. 923 § 41) without substantive change. The requirement of former Section 854 that the petition be filed "within any time limits provided in the will" was omitted as unnecessary in view of the requirement of subdivision (a) of Section 9981 that the person given the option must comply with the terms and conditions stated in the will. Subdivision (c) continued the third sentence of subdivision (b) of former Section 854 (repealed by 1987 Cal. Stat. ch. 923 § 41) without substantive change, except that Section 9981 required that notice be given at least 15 days before the hearing pursuant to Section 1220 instead of at least 10 days before the hearing as required by former Probate Code Section 1200.5 (repealed by 1987 Cal. Stat. ch. 923 § 59). For background on the provisions of this part, see the Comment to this part under the part heading.

§ 9982. Protection of rights of creditors

Comment. Section 9982 continues Section 9982 of the repealed Probate Code without change. As to orders made, or actions taken, before July 1, 1988, and matters pending on July 1, 1988, see Section 9645. As to the application of any amendments made after that date, see Section 3.

Background on Section 9982 of Repealed Code

Section 9982 was added by 1987 Cal. Stat. ch. 923 § 93. The section restated the fourth sentence of subdivision (b) of former Probate Code Section 854 (repealed by 1987 Cal. Stat. ch. 923 § 41) without substantive change. For background on the provisions of this part, see the Comment to this part under the part heading.

§ 9983. Error does not invalidate proceedings

Comment. Section 9983 continues Section 9983 of the repealed Probate Code without change. This section is comparable to Sections 9923 (exchanges), 9948(d) (leases), 9966 (option to purchase real property), 10264 (sale of personal property), and 10316 (sale of real property).

If the court lacks jurisdiction, Section 9983 does not cure the defect. See Texas Co. v. Bank of America Nat'l Trust & Sav. Ass'n, 5 Cal. 2d 35, 41-44, 53 P.2d 127 (1935). Section 9983 does not limit the court's authority to set aside an order made through mistake, inadvertence, surprise, or excusable neglect. See Code Civ. Proc. § 473; Estate of Lee, 159 Cal. App. 2d 109, 111-12, 323 P.2d 448 (1958); Estate of Herz, 147 Cal. App. 2d 100, 106-07, 305 P.2d 278 (1956); Estate of McCrae, 133 Cal. App. 2d 634, 637-39, 284 P.2d 914 (1955); Estate of Moreland, 49 Cal. App. 2d 484, 487-88, 121 P.2d 867 (1942). As to orders made, or actions taken, before July 1, 1988, and matters pending on July 1, 1988, see Section 9645. As to the application of any amendments made after that date, see Section 3.

Background on Section 9983 of Repealed Code

Section 9983 was a new provision added by 1987 Cal. Stat. ch. 923 § 93. For background on the provisions of this part, see the Comment to this part under the part heading.

CHAPTER 18. SALES

Article 1. General Provisions

§ 10000. When estate property may be sold

Comment. Section 10000 continues Section 10000 of the repealed Probate Code without change. The personal representative is required to exercise the power granted by this section to the extent that ordinary care and diligence require that the power be exercised and may not exercise the power to the extent that ordinary care and diligence require that the power not be exercised. See Section 9600(b). As to the effect of court authorization or approval, see Section 7250. See also Sections 7260-7263 (orders and transactions affecting property). As to orders made, or actions taken, before July 1, 1988, and matters pending on July 1, 1988, see Section 9645. As to the application of any amendments made after that date, see Section 3.

Background on Section 10000 of Repealed Code

Section 10000 was added by 1987 Cal. Stat. ch. 923 § 93. Subdivisions (a) and (b) restated a portion of the second sentence of former Probate Code Section 754 (repealed by 1987 Cal. Stat. ch. 923 § 39) without substantive change. The reference to "taxes" was added to subdivision (a) of Section 10000, consistent with the likely construction of former Section 754. The phrase "to the advantage of the estate and in the best interest of the interested persons" was substituted in subdivision (b) of Section 10000 for the phrase "for the advantage, benefit, and best interests of the estate and those interested therein" which was used in former Section 754. This substitution made no substantive change in the provision. Subdivisions (c) and (d) restated portions of the first sentence of former Probate Code Section 757 (repealed by 1987 Cal. Stat. ch. 923 § 39) without substantive change. For background on the provisions of this part, see the Comment to this part under the part heading.

§ 10001. Court order requiring sale of property

Comment. Section 10001 continues Section 10001 of the repealed Probate Code without change. See also Sections 7260-7263 (orders and transactions affecting property). For general provisions, see Sections 1000-1004 (rules of practice), 1020-1023 (petitions and other papers), 1040-1050 (hearings and orders), 1200-1230 (notice of hearing), 1240-1242 (citations), 1250-1252 (request for special notice), 1260-1265 (proof of giving of notice). As to orders made, or actions taken, before July 1, 1988, and matters pending on July 1, 1988, see Section 9645. As to the application of any amendments made after that date, see Section 3.

Background on Section 10001 of Repealed Code

Section 10001 was added by 1987 Cal. Stat. ch. 923 § 93. The section restated former Probate Code Section 758 (repealed by 1987 Cal. Stat. ch. 923 § 39) without substantive change, except for the addition of subdivision (b) which was new. The reference to "taxes" was added to subdivision (a)(1), consistent with the addition of "taxes" to subdivision (a) of Section 10000. The phrase "to the advantage of the estate and in the best interest of the interested persons" was substituted in subdivision (a)(2) of Section 10001 for the phrase "for the advantage, benefit and best interests of the estate and those interested therein" which was used in former Section 758. This substitution made no substantive change and made subdivision (a)(2) of Section 10001 consistent with subdivision (b) of Section 10000. For background on the provisions of this part, see the Comment to this part under the part heading.

§ 10002. Directions in will as to mode of selling or property to be sold

Comment. Section 10002 continues Section 10002 of the repealed Probate Code without change. Subdivision (b) permits the court to dispense in whole or in part with the directions given in the will where good cause is shown why the personal representative should not be required to comply with the directions. The court may make an order under subdivision (b), for example, where the property directed to be sold to pay the decedent's debts has greatly increased in value since the will was executed and there is sufficient cash in the estate to pay the debts and paying the debts with the cash would not adversely affect any of the interested persons. Or the court may determine that the mode of selling directed in the will is not appropriate under the circumstances existing at the time the property is to be sold. For general provisions, see Sections 1000-1004 (rules of practice), 1020-1023 (petitions and other papers), 1040-1050 (hearings and orders), 1200-1230 (notice of hearing), 1250-1252 (request for special notice), 1260-1265 (proof of giving of notice). See also Sections 7260-7263 (orders and transactions affecting property). As to orders made, or actions taken, before July 1, 1988, and matters pending on July 1, 1988, see Section 9645. As to the application of any amendments made after that date, see Section 3.

Background on Section 10002 of Repealed Code

Section 10002 was added by 1987 Cal. Stat. ch. 923 § 93. Subdivision (a) restated the last sentence of former Probate Code Section 757 (repealed by 1987 Cal. Stat. ch. 923 § 39) without substantive change. Subdivision (b) was new. For background on the provisions of this part, see the Comment to this part under the part heading.

§ 10003. Discretion of personal representative as to property to be sold and mode of selling

Comment. Section 10003 continues Section 10003 of the repealed Probate Code without change. Under subdivision (a) there is no priority between personal and real property in selling property, whatever the reason that causes the property to be sold. For the rules of abatement, see Sections 21400-21406. As to orders made, or actions taken, before July 1, 1988, and matters pending on July 1, 1988, see Section 9645. As to the application of any amendments made after that date, see Section 3.

Background on Section 10003 of Repealed Code

Section 10003 was added by 1987 Cal. Stat. ch. 923 § 93 and was amended by 1988 Cal. Stat. ch. 1199 § 89. Subdivision (a) restated the first sentence and a portion of the second sentence of former Probate Code Section 754 (repealed by 1987 Cal. Stat. ch. 923 § 39) without substantive change except that the former provision provided that there was no priority between personal and real property in selling property "to pay debts, legacies, family allowance or expenses." Under subdivision (a) of Section 10003 there was no priority between personal and real property in selling property, whatever the reason that causes the property to be sold. Subdivision (b) restated the third sentence of former Section 754 (repealed by 1987 Cal. Stat. ch. 923 § 39) without substantive change. Subdivision (c) restated a portion of the second sentence of former Section 754 and a portion of the first sentence of former Probate Code Section 757 (provisions repealed by 1987 Cal. Stat. ch. 923 § 39) without substantive change. The 1988 amendment corrected a section reference. For background on the provisions of this part, see the Comment to this part under the part heading.

§ 10004. Sale of assets, whether real or personal, as a unit

Comment. Section 10004 continues Section 10004 of the repealed Probate Code without substantive change. The personal representative is required to exercise the power granted by this section (by filing a petition with the court) to the extent that ordinary care and diligence require that the power be exercised. See Section 9600(b). As to the effect of court authorization or approval, see Section 7250. As to orders made, or actions taken, before July 1, 1988, and matters pending on July 1, 1988, see Section 9645. As to the application of any amendments made after that date, see Section 3.

Background on Section 10004 of Repealed Code

Section 10004 was added by 1987 Cal. Stat. ch. 923 § 93. The section restated former Probate Code Section 754.5 (repealed by 1987 Cal. Stat. ch. 923 § 39) without substantive change. For background on the provisions of this part, see the Comment to this part under the part heading.

§ 10005. Sale for more or less than appraised value

Comment. Section 10005 continues Section 10005 of the repealed Probate Code without change. See also Sections 9657 (personal representative may not profit from increase, nor suffer loss from decrease or destruction without fault), 10900 (contents of account), 10950-10954 (duty to account). As to orders made, or actions taken, before July 1, 1988, and matters pending on July 1, 1988, see Section 9645. As to the application of any amendments made after that date, see Section 3.

Background on Section 10005 of Repealed Code

Section 10005 was added by 1987 Cal. Stat. ch. 923 § 93 and was amended by 1988 Cal. Stat. ch. 1199 § 89.5. The section restated a provision formerly found in the last sentence of former Probate Code Section 920 (prior to its amendment by 1987 Cal. Stat. ch. 923 § 44) without substantive change. The language in subdivision (a) requiring the personal representative to account for the "proceeds of sale" was new, but was consistent with case law. See In re Estate of Radovich, 74 Cal. 536, 538-40, 16 P. 321 (1888).

The language in subdivision (b) that the personal representative is not responsible for a loss where a sale is made "in accordance with law" replaced the former reference to a sale which is "justly" made. The new language was consistent with case law. See In re Estate of Guglielmi, 138 Cal. App. 80, 86-88, 31 P.2d 1078 (1934).

The 1988 amendment conformed the terminology used in Section 10005 to the terminology used in other provisions enacted in 1988.

For background on the provisions of this part, see the Comment to this part under the part heading.

§ 10006. Cotenant's consent to sale

Comment. Section 10006 is new and is to facilitate estate sales of the decedent's interest in a joint tenancy or tenancy in common. Section 10006 is consistent with existing practice. See 1 California Decedent Estate Practice § 6.19 (Cal. Cont. Ed. Bar rev. ed. Feb. 1989) (probate court may by stipulation consider any matter in connection with and in aid of proceeding).

Article 2. Contract With Agent, Broker, or Auctioneer

§ 10150. Contract with agent or broker

Comment. Section 10150 restates Section 10150 of the repealed Probate Code without substantive change. For various licensing provisions, see Bus. & Prof. Code §§ 5731 (auctioneer), 10000-10581 (real estate brokers); Fin. Code § 22200 (personal property brokers); Health & Safety Code §§ 18006, 18045 (sale of mobilehomes and manufactured housing). See also Section 10160 (no liability unless actual sale made, confirmed, and consummated).

Under subdivision (c), the contract granting the exclusive right to sell may be extended for any number of additional periods (each period not to exceed 90 days) if the personal representative obtains permission of the

court for each extension. As to orders made, or actions taken, before July 1, 1988, and matters pending on July 1, 1988, see Section 9645. As to the application of any amendments made after that date, see Section 3. As to independent administration authority, see Section 10538.

Background on Section 10150 of Repealed Code

Section 10150 was added by 1987 Cal. Stat. ch. 923 § 93. Subdivision (a) restated a portion of the first sentence of former Probate Code Section 760 (repealed by 1987 Cal. Stat. ch. 923 § 39) except that:

(1) The reference in former Section 760 to a "bona fide agent or broker" was not continued. Instead (1) a reference to a "licensed real estate broker" was made in paragraph (1) of subdivision (a) and (2) the second sentence of paragraph (2) of subdivision (a) was added.

(2) The reference in former Section 760 to a "multiple group of agents or brokers" was replaced by the second sentence of paragraph (1) of subdivision (a).

The first sentence of subdivision (b) restated the last portion of the first sentence and the fourth sentence of former Section 760 (repealed by 1987 Cal. Stat. ch. 923 § 39) without substantive change. The second sentence of subdivision (b) restated the last portion of the last sentence of former Section 760 with the addition of the phrase "except for the obligations of the estate to the purchaser of personal property as to which title passes pursuant to Section 10259 without court confirmation or approval." This additional phrase was drawn from former Probate Code Section 760.5 (repealed by 1987 Cal. Stat. ch. 923 § 39), which was continued as Section 10151. The last sentence of subdivision (b) restated the first portion of the last sentence of former Section 760 without substantive change.

The first two sentences of subdivision (c) restated the second paragraph of former Section 760 (repealed by 1987 Cal. Stat. ch. 923 § 39) without substantive change. The last sentence of subdivision (c) was new.

For background on the provisions of this part, see the Comment to this part under the part heading.

§ 10151. Contract with auctioneer

Comment. Section 10151 restates Section 10151 of the repealed Probate Code without substantive change. See also Sections 10254 (sales at public auction), 10259 (unless court subsequently approves the sale, personal representative responsible for the value of property title to which passes without court confirmation or approval). As to orders made, or actions taken, before July 1, 1988, and matters pending on July 1, 1988, see Section 9645. As to the application of any amendments made after that date, see Section 3.

Background on Section 10151 of Repealed Code

Section 10151 was added by 1987 Cal. Stat. ch. 923 § 93.

Subdivision (a) restated the first sentence of former Probate Code Section 760.5 (repealed by 1987 Cal. Stat. ch. 923 § 39) with the following changes:

(1) The reference in former Section 760.5 to a "bona fide" auctioneer "authorized to act as such in the locality" was replaced by the reference to an auctioneer licensed under the Auctioneer and Auction Licensing Act (Bus. & Prof. Code §§ 5700-5791.5). Where the sale is to be made in another jurisdiction, Section 10151 referred to a person permitted to sell the property by public auction sale in that jurisdiction.

(2) The provision of former Section 760.5 authorizing auction sale of "tangible" personal property was revised to authorize auction sale of all personal property an auctioneer may auction under the Auctioneer and Auction Licensing Act (see, e.g., Bus. & Prof. Code §§ 5701(j), 5774, 5775-5776).

Subdivision (b) was new. Subdivisions (c) and (d) restated the remainder of former Section 760.5 without substantive change. For background on the provisions of this part, see the Comment to this part under the part heading.

Article 3. Compensation of Agent, Broker, or Auctioneer

§ 10160. Limitation on liability of estate

Comment. Section 10160 continues Section 10160 of the repealed Probate Code without change. Subdivision (c) makes clear that the sale must be consummated before the estate is liable to the agent, broker, or auctioneer. In the case of real property, the requirement that an actual sale be made and be consummated requires that the estate receive the purchase price and that a deed be given to the purchaser and a mortgage or deed of trust be taken for payments due in the future. See Estate of Rule, 25 Cal. 2d 1, 16, 152 P.2d 1003 (1944); Wilson v. Fleming, 106 Cal. App. 542, 549, 289 P. 658 (1930). As to when court confirmation or approval is not required, see Section 10259 (personal property). As to orders made, or actions taken, before July 1, 1988, and matters pending on July 1, 1988, see Section 9645. As to the application of any amendments made after that date, see Section 3.

Background on Section 10160 of Repealed Code

Section 10160 was added by 1987 Cal. Stat. ch. 923 § 93. The section restated the last portion of the last sentence of former Probate Code Section 760 and a portion of the third sentence of former Probate Code Section 760.5 (provisions repealed by 1987 Cal. Stat. ch. 923 § 39) with the addition of subdivision (c). For background on the provisions of this part, see the Comment to this part under the part heading.

§ 10160.5. No commission where broker is purchaser

Comment. Section 10160.5 restates Section 10160.5 of the repealed Probate Code, with revisions making the section applicable to both real and personal property and to both agents and brokers. This section extends to the situation where there is not complete identity between broker and purchaser but the broker does have an interest in the purchasing entity, whether that interest is substantial or insubstantial. Thus, for example, the broker would not be entitled to a commission if the purchaser is a corporation in which the broker owns stock.

Background on Section 10160.5 of Repealed Code

Section 10160.5 was a new provision added by 1989 Cal. Stat. ch. 544 § 10. The section changed the rule in Estate of Levinthal, 105 Cal. App. 3d 691, 164 Cal. Rptr. 628 (1980), that a broker in an estate sale is entitled to a commission even though the purchaser is an entity in which the broker has an interest. The section was consistent with the rule in Estate of Toy, 72 Cal. App. 3d 392, 140 Cal. Rptr. 183 (1977) (broker

may not receive commission where there is complete identity between broker and purchaser), and broadened that rule to apply in the *Levinthal* situation. For background on the provisions of this chapter, see the Comment to this chapter under the chapter heading.

§ 10161. Compensation and fees to be in reasonable amount determined by court

Comment. Section 10161 continues Section 10161 of the repealed Probate Code without change. For provisions concerning court determination of the compensation of the agent or broker, see Sections 10261(d) (personal property), 10313(b) (real property). As to orders made, or actions taken, before July 1, 1988, and matters pending on July 1, 1988, see Section 9645. As to the application of any amendments made after that date, see Section 3.

Subdivision (a). Rate or Amount of Compensation

Subdivision (a) of Section 10161 provides for judicial control over the reasonableness of the compensation of brokers and agents. A local court rule may, for example, fix reasonable compensation as a commission of 6 percent of the original bid or sales price (whichever is appropriate under the provisions of this article), and the court may determine what constitutes reasonable compensation by applying the court rule. Where an agent or broker holding a nonexclusive contract either produces the original bid returned to the court for confirmation or produces the successful overbidder, the compensation to which the agent or broker is entitled is the amount determined by the court to be a reasonable compensation for the services of the agent or broker to the estate and is subject to the provisions of this article.

The court has considerable flexibility in determining the compensation of the agent or broker or the agents or brokers in connection with a sale of property. Subject to the provisions of this article, compensation may be fixed, for example, as a percentage of the amount of the bid returned to the court for confirmation (see, e.g., Section 10164(b)) or as a percentage of the amount for which the sale is confirmed (see, e.g., Section 10165). The court may use one percentage (e.g., 6 percent) for improved property and another (e.g., 10 percent) for unimproved property. Or the court may use a schedule with the percentage decreasing as the value of the property increases (e.g., 6 percent for the first $100,000; 5 percent for amounts in excess of $100,000). The method of computing the compensation may be prescribed by court rule, but the court rule must not conflict with the provisions of this article. Nothing in this article precludes the court from fixing the compensation using a different method than a percentage of the amount bid or the amount for which the sale is confirmed. The personal

representative and the agent or broker may provide in their contract for the amount or manner of computing the compensation for the sale and, although the court may fix the compensation at less than the amount provided for in the contract, the compensation allowed by the court in such a case may not exceed the contract amount. See Section 10161(c). See also Sections 10261(d), 10313(b) (court to fix compensation of agents and brokers).

The compensation of an agent or broker may be for the sale of real or personal property. See Section 10150. For a limitation on the amount of compensation that may be allowed to the agent or broker who produces the successful overbidder, see Section 10162. See also Section 10166 (invalidity of provision in bid that certain amount of bid be paid to agent or broker).

Subdivision (b). Requirements for Compensation

Subdivision (b) makes clear that an agent or broker holding a nonexclusive contract is not entitled to compensation unless the agent or broker produces the original bid returned to the court for confirmation or produces the overbidder to whom the sale is confirmed at the confirmation hearing. For example, the agent or broker holding a nonexclusive contract is not entitled to compensation in the following cases:

(1) Where the bid returned to the court for confirmation was submitted by a bidder not produced by an agent or broker and the sale is confirmed to that bidder.

(2) Where the bid returned to the court for confirmation was submitted by a bidder produced by another agent or broker and the sale is confirmed to that bidder. See Section 10162.3.

(3) Where the bid returned to the court for confirmation was submitted by a bidder not produced by the agent or broker who holds a nonexclusive contract and the court at the confirmation hearing confirms the sale of the property to an overbidder not produced by the agent or broker holding the nonexclusive contract. See Sections 10163, 10164, 10165(a)(1), (b), (c)(2).

Subdivision (c). Compensation Subject to Contractual Limits

Subdivision (c) makes clear that the amount of the compensation of the agent or broker may not exceed the amount provided for in the contract. For example, if the contract provides for a 5 percent commission and the applicable court rule would allow a 6 percent commission, the commission awarded by the court may not exceed the 5 percent rate provided for in the contract. See also Section 10166 (invalidity of provision in bid that certain amount of bid be paid to agent or broker). In

all of the examples set out below, it should be remembered that the compensation due an agent or broker holding a contract with the personal representative would be subject to the terms of the contract. Thus, the amount of compensation could be less than the amount indicated in the example.

Examples of Application of Article

The following examples illustrate the effect of Sections 10161-10166. In these examples, Broker A refers to the broker holding an exclusive or nonexclusive contract with the personal representative (as indicated in the particular example). Broker B refers to a broker who does not hold a contract with the personal representative and who produces the bid returned to the court for confirmation. Broker C refers to a broker who does not have a contract with the personal representative and who produces a successful overbidder. (This broker is referred to as Broker C whether or not a Broker A or Broker B is involved in the transaction).

Example 1. Broker with contract produces original bid; no overbid. The personal representative enters into a written contract (either exclusive or nonexclusive) with Broker A for the sale of real property of the estate. The contract provides for a commission to Broker A of 6 percent of the sale price. Broker A finds a bidder whose bid is confirmed by the court. Broker A is entitled to a commission on the amount for which the sale is confirmed. See Section 10161(b), 10162.3. The court is not bound by the 6 percent commission provided in the contract. The court may fix a commission in the amount the court determines to be reasonable compensation for the services of Broker A to the estate, but not an amount in excess of the amount provided in the contract. See Section 10161(a), (c).

Example 2. Broker with contract produces original bid; successful overbidder not produced by broker. The personal representative enters into a written contract (either exclusive or nonexclusive) with Broker A for the sale of real property of the estate. The contract provides for a commission to Broker A of 6 percent of the sale price. Broker A finds a bidder whose bid is returned to the court for confirmation. At the confirmation hearing, the highest bid is made by a different bidder not produced by a broker. The court confirms the sale to the overbidder. Broker A is entitled to a commission on the amount of the original bid, but not the overbid. See Sections 10162.5(b), 10164(b).

For example, Broker A returns a $100,000 bid for confirmation. At the hearing, a different bidder not produced by a broker bids $110,000 and the sale is confirmed to the overbidder. Broker A receives a $6,000 commission on the original bid (6 percent of $100,000 = $6,000). There

is no commission paid on the $10,000 amount by which the overbid exceeds the original bid.

Example 3. Exclusive listing contract; original bidder produced by Broker B; successful overbidder not produced by broker. The personal representative enters into an exclusive listing contract with Broker A. The original bid returned to court for confirmation is produced by Broker B. At the confirmation hearing, the highest bid is made by a different bidder not produced by a broker. The court confirms the sale to the overbidder. The commission is determined as in Example 2 (reasonable commission on amount of original bid). The commission is divided between Broker A and Broker B as provided in any agreement between them or, if there is no agreement, is divided equally. See Section 10164(c).

For example, suppose that the original bid returned to the court by Broker B is $100,000 and a bidder not produced by a broker makes an overbid of $110,000 on which the sale is confirmed. The court determines that a reasonable commission is 6 percent, which yields $6,000 (6 percent of $100,000 = $6,000). If there is no agreement between the brokers, Broker A and Broker B each receive $3,000, which is half of the commission on the original bid returned to the court for confirmation (6 percent of $100,000 = $6,000; half of $6,000 = $3,000).

Example 4. No exclusive listing contract; original bidder not produced by broker; successful overbidder produced by Broker C. The personal representative has not entered into an exclusive listing contract with an agent or broker. The original bid is made by a bidder not produced by a broker. A successful overbidder is produced by Broker C. The reasonable commission allowed by the court is paid entirely to Broker C. See Section 10163. Subject to Section 10162, the commission is allowed on the full amount for which the sale is confirmed. See Section 10163(b). For example, where the commission is fixed by the court in a percentage amount, the percentage is applied to the full amount for which the sale is confirmed. See Section 10163. As noted, the commission of Broker C is subject to the limitation that it may not exceed half of the difference between the amount of the original bid and the amount of the successful overbid. See Section 10162. (The result would be the same in this example where the successful overbidder was produced by Broker A, holding a nonexclusive contract.)

For example, suppose that the original bid returned to court was for $100,000 made by a bidder not produced by a broker. Broker C brings in an increased bid of $110,000 on which the sale is confirmed. Under Section 10163, Broker C is entitled to a commission on the amount for

which the sale is confirmed. The court determines that a reasonable commission is 6 percent, which yields $6,600 (6 percent of $110,000 = $6,600). However, Broker C is entitled only to a commission of $5,000, instead of $6,600, by operation of Section 10162 which limits the commission of a broker producing the successful overbidder to half of the difference between the original bid and the overbid ($110,000 – $100,000 = $10,000; half of $10,000 = $5,000).

Example 5. Exclusive listing contract; original bidder not produced by broker; successful overbidder produced by Broker A. The personal representative enters into an exclusive listing contract with Broker A. The contract provides for a commission to Broker A of 6 percent of the sale price. The bid returned to court for confirmation is made by a bidder not produced by a broker. At the confirmation hearing, the highest bid is made by a different bidder produced by Broker A. The court confirms the sale to the overbidder. Broker A is entitled to a commission on the amount for which the sale is confirmed. See Section 10163(a). The limitation on the commission of an overbidder provided by Section 10162 does not apply in this case because the overbid is produced by a broker with an exclusive listing contract. See Section 10162(b).

For example, suppose that the original bid returned to court was for $100,000 made by a bidder not produced by a broker. Broker A (with exclusive contract) brings in an increased bid of $110,000 on which the sale is confirmed. Broker A is entitled to a commission on the amount for which the sale is confirmed. The court determines that a reasonable commission is 6 percent, which yields $6,600 (6 percent of $110,000 = $6,600). Broker A receives the entire $6,600 commission.

Example 6. No exclusive listing contract; original bidder produced by Broker A; successful overbidder produced by Broker C. The personal representative enters into a nonexclusive contract with Broker A for the sale of real property of the estate. The contract provides for a commission to Broker A of 6 percent of the sale price. Broker A finds a bidder whose bid is returned to the court for confirmation. At the confirmation hearing, the highest bid is made by a different bidder produced by Broker C who does not hold a contract with the personal representative. The court confirms the sale to the overbidder. Broker A is entitled to half of the commission on the original bid. Broker C is entitled to the other half of the commission on the original bid plus all of the commission on the overbid. See Section 10165(a)(1), (b), (c)(2).

For example, suppose that Broker A returns a $100,000 bid for confirmation and Broker C brings in an increased bid of $110,000 on which the sale is confirmed. The court approves a 6 percent commission,

which yields $6,600 (6 percent of $110,000 = $6,600). Broker A receives $3,000 which is half of the commission on the original bid (6 percent of $100,000 = $6,000; half of $6,000 = $3,000). Broker C receives $3,600, which consists of the other half of the commission on the original bid ($3,000) and all of the commission on the amount of the difference between the original bid and the confirmed overbid ($110,000 – $100,000 = $10,000; 6 percent of $10,000 = $600).

If the original bidder in this example were produced by Broker B, who does not have a contract with the personal representative, Broker B would be entitled to the same commission as the broker with a nonexclusive contract in this example, except that the amount of the commission would be subject only to control of the court, and not to contractual limitations. See Example 10.

Example 7. No exclusive listing contract; original bidder produced by Broker B; successful overbidder not produced by broker. The personal representative enters into a nonexclusive contract with Broker A for the sale of real property of the estate. Broker B finds a bidder whose bid is returned to the court for confirmation. At the confirmation hearing, the highest bid is made by a different bidder not produced by a broker. The court confirms the sale to the overbidder. Broker B is entitled to a commission on the amount of the original bid. See Section 10164(a)-(b). Broker A is not entitled to a commission. See Section 10161(b).

For example, suppose Broker B returns a $100,000 bid for confirmation and a bidder not produced by a broker makes an overbid of $110,000 on which the sale is confirmed. The court approves a 6 percent commission, which yields $6,000 (6 percent of $100,000 = $6,000). Broker B receives the entire $6,000 commission on the original bid. Broker A receives nothing.

Example 8. Exclusive listing contract; original bidder produced by Broker B; successful overbidder produced by Broker C. The personal representative enters into an exclusive contract with Broker A for the sale of real property of the estate. The contract provides for a commission to Broker A of 6 percent of the sale price. Broker B produces a bidder whose bid is returned to the court for confirmation. At the confirmation hearing, the highest bid is made by a different bidder produced by Broker C. The court confirms the sale to the overbidder. Under Section 10165, Broker A and Broker B are entitled to share half of the commission on the original bid; Broker C is entitled to the other half of the commission on the original bid plus all of the commission on the overbid. The division of the commission between Broker A and Broker B is determined by their agreement. See Section 10165(a)(1), (b), (c)(3).

For example, suppose Broker B returns a $100,000 bid for confirmation and Broker C brings in an increased bid of $110,000 on which the sale is confirmed. The court approves a 6 percent commission, which yields $6,600 (6 percent of $110,000 = $6,600). Broker A (with exclusive contract) and Broker B (broker producing bidder whose bid was returned to the court for confirmation) are entitled to share half of the commission on the original bid (6 percent of $100,000 = $6,000; half of $6,000 = $3,000). Thus, Broker A and Broker B each receive $1,500 (half of $3,000), unless otherwise provided in their agreement. Broker C receives $3,600, which consists of the other half of the commission on the original bid ($3,000) plus all of the commission on the difference between the original bid and the amount for which the sale is confirmed ($110,000 – $100,000 = $10,000; 6 percent of $10,000 = $600).

Example 9. Exclusive listing contract; original bid produced by Broker B; successful overbidder produced by Broker A. The personal representative enters into an exclusive contract with Broker A for the sale of real property of the estate. The contract provides for a commission to Broker A of 6 percent of the sale price. Broker B finds a bidder whose bid is returned to the court for confirmation. At the confirmation hearing, the highest bid is made by a different bidder produced by Broker A. The court confirms the sale to the overbidder. Broker B is entitled to half of the commission on the original bid. Broker A is entitled to the other half of the commission on the original bid plus all of the commission on the overbid. See Section 10165(a)(1), (b), (c)(5).

For example, suppose that Broker B returns a $100,000 bid for confirmation, and Broker A brings in an increased bid of $110,000 on which the sale is confirmed. The court approves a 6 percent commission, which yields $6,600 (6 percent of $110,000 = $6,600). Broker A (with exclusive contract) receives $3,600, which consists of half of the commission on the original bid (half of 6 percent of $100,000 = $3,000) and all of the commission on the difference between the original bid and confirmed overbid ($110,000 – $100,000 = $10,000; 6 percent of $10,000 = $600). Broker B (who produced original bid) receives the other half of the commission on the original bid (half of 6 percent of $100,000 = $3,000).

Example 10. No exclusive listing contract; original bidder produced by Broker B; no overbid. The personal representative has not entered into an exclusive contract with a broker. Broker B produces a bidder whose bid is confirmed by the court. The reasonable compensation allowed by the court on the amount for which the sale is confirmed is paid to Broker B. See Section 10162.3.

Example 11. Exclusive listing contract; original bidder not produced by broker; no overbid. The personal representative enters into an exclusive contract with Broker A for the sale of real property of the estate. The bid returned to court for confirmation is made by a bidder not produced by a broker. The sale is confirmed to the original bidder on that bid. The reasonable compensation allowed by the court on the amount for which the sale is confirmed is paid to Broker A. See Section 10162.5(a)(1).

Example 12. Exclusive listing contract; original bidder not produced by broker; successful overbidder not produced by broker. The personal representative enters into an exclusive contract with Broker A for the sale of real property of the estate. The bid returned to court for confirmation is made by a bidder not produced by a broker. At the confirmation hearing, the highest bid is made by a different bidder not produced by a broker. The court confirms the sale to the overbidder. The commission is allowed on the amount of the original bid. See Section 10162.5(b). For example, where the commission is fixed by the court in a percentage amount, the percentage is applied to the amount of the original bid, not the amount of the successful overbid.

For example, suppose that the original bid returned to court was for $100,000 made by a bidder not produced by a broker and that a different bidder not produced by a broker makes an overbid of $110,000 on which the sale is confirmed. The court determines that a reasonable commission is 6 percent. Broker A (holder of exclusive contract) receives a $6,000 commission on the original bid (6 percent of $100,000 = $6,000). There is no commission paid on the $10,000 amount by which the overbid exceeds the original bid.

Example 13. Exclusive listing contract; original bidder not produced by broker; successful overbidder produced by Broker C. The personal representative enters into an exclusive contract with Broker A for the sale of real property of the estate. The bid returned to court for confirmation is made by a bidder not produced by a broker. At the confirmation hearing, the highest bid is made by a different bidder produced by Broker C. The court confirms the sale to the overbidder. Broker A is entitled to half of the commission on the original bid. Subject to Section 10162, Broker C is entitled to the other half of the commission on the original bid plus all of the commission on the overbid. See Section 10165(a)(2), (b), (c)(4).

For example, suppose that the original bid returned to court was for $100,000 made by a bidder not produced by a broker and that Broker C brings in an increased bid of $110,000 on which the sale is confirmed.

The court determines that a reasonable commission is 6 percent, which yields $6,600 (6 percent of $110,000 = $6,600). Broker A (holder of exclusive contract) receives $3,000, which is half of the commission on the original bid (half of 6 percent of $100,000 = $3,000). Broker C receives $3,600, which consists of the other half of the commission on the original bid (half of 6 percent of $100,000 = $3,000) and all of the commission on the difference between the original bid and the confirmed overbid ($110,000 – $100,000 = $10,000; 6 percent of $10,000 = $600). Since the $3,600 commission does not exceed half of the amount by which the overbid exceeds the original bid (half of $10,000 = $5,000), Section 10162 is not violated and Broker C is entitled to the full $3,600 commission.

Example 14. Exclusive listing contract; original bidder produced by Broker B; no overbid. The personal representative enters into an exclusive contract with Broker A for the sale of real property of the estate. The bid returned to court for confirmation is made by a bidder produced by Broker B. The sale is confirmed to that bidder on that bid. The reasonable compensation allowed by the court on the amount for which the sale is confirmed is divided between Broker A and Broker B as provided in any agreement between them, or, if there is no agreement, is divided equally. See Section 10162.7.

For example, suppose that Broker B produces the original bid of $100,000 and the sale is confirmed at that amount. The court determines that a reasonable commission is 6 percent, which yields $6,000 (6 percent of $100,000 = $6,000). The $6,000 is divided between Broker A and Broker B as provided in their agreement or, absent an agreement, is divided equally so that Broker A receives $3,000 and Broker B receives $3,000.

Example 15. No exclusive listing contract; original bidder produced by Broker B; one or more other overbidders; successful overbid by original bidder produced by Broker B. The bid returned to the court for confirmation is made by a bidder produced by Broker B. At the confirmation hearing, an increased bid is made by a different bidder produced by Broker D. Another increased bid is made by a third bidder not produced by a broker. A further increased bid is made by the original bidder, produced by Broker B. The court confirms the sale to the overbidder produced by Broker B. Under Section 10162.3, Broker B is entitled to a commission on the full amount for which the sale is confirmed.

For example, suppose that the original bid returned to court is $100,000, Broker D brings in an overbid of $120,000, the unrepresented

bidder bids $130,000, and the original bidder produced by Broker B makes an overbid of $140,000 on which the sale is confirmed. The court determines that a reasonable commission is 6 percent, which yields $8,400 (6 percent of $140,000 = $8,400). Broker B is entitled to the full commission of $8,400. Broker D receives nothing, as provided in Section 10161(b).

Example 16. Exclusive listing contract; original bidder produced by Broker B; one or more other overbidders; successful overbid by original bidder produced by Broker B. The personal representative enters into an exclusive contract with Broker A for the sale of real property of the estate. The bid returned to the court for confirmation is made by a bidder produced by Broker B. At the confirmation hearing, an increased bid is made by a different bidder produced by Broker D. Another increased bid is made by a third bidder not produced by a broker. A further increased bid is made by the original bidder, produced by Broker B. The court confirms the sale to the overbidder produced by Broker B. Under Section 10162.7, in the absence of an agreement between Broker A and Broker B, the reasonable compensation allowed by the court on the original bid is divided equally between Broker A and Broker B, and all of the commission on the overbid is paid to Broker B.

For example, suppose that the original bid returned to court is $100,000, Broker D brings in an overbid of $120,000, the unrepresented bidder bids $130,000, and the original bidder produced by Broker B makes an overbid of $140,000 on which the sale is confirmed. The court determines that a reasonable commission is 6 percent, which yields $8,400 (6 percent of $140,000 = $8,400). Broker B receives $5,400, which consists of half of the commission on the original bid (half of 6 percent of $100,000 = $3,000) and all of the commission on the difference between the original bid and confirmed overbid ($140,000 – $100,000 = $40,000; 6 percent of $40,000 = $2,400). Broker A receives the other half of the commission on the original bid (half of 6 percent of $100,000 = $3,000). Broker D receives nothing.

Example 17. Exclusive listing contract; agreement between Broker A and Broker B; original bidder produced by Broker B; one or more other overbidders; successful overbid by original bidder produced by Broker B. The personal representative enters into an exclusive contract with Broker A for the sale of real property of the estate. The bid returned to the court for confirmation is made by a bidder produced by Broker B. Broker A and Broker B have an agreement to split the commission on the full amount for which the sale is confirmed. At the confirmation hearing, an increased bid is made by a different bidder produced by Broker D.

Another increased bid is made by a third bidder not produced by a broker. A further increased bid is made by the original bidder produced by Broker B. The court confirms the sale to the overbidder produced by Broker B. Under Section 10162.7, the reasonable compensation allowed by the court on the full amount for which the sale is confirmed is divided between Broker A and Broker B pursuant to their agreement.

For example, suppose that the original bid returned to court is $100,000, Broker D brings in an overbid of $120,000, the unrepresented bidder bids $130,000, and the original bidder produced by Broker B makes an overbid of $140,000 on which the sale is confirmed. The court determines that a reasonable commission is 6 percent, which yields $8,400 (6 percent of $140,000 = $8,400). Broker A and Broker B each receive $4,200 pursuant to their agreement. Broker D receives nothing.

Example 18. Exclusive listing contract; original bidder not produced by broker; successful overbidder produced by Broker C. The personal representative enters into an exclusive contract with Broker A for the sale of real property of the estate. The contract provides for a commission to Broker A of 6 percent of the sale price. The bid returned to the court for confirmation is made by a bidder not produced by a broker. At the confirmation hearing, the highest bid is made by a different bidder produced by Broker C. The court confirms the sale to the overbidder. Under Section 10165(b), Broker C is entitled to half of the commission on the original bid plus all of the commission on the overbid, subject to the limitation on overbids in Section 10162. Under Section 10165(c)(4), Broker A is entitled to the other half of the commission on the original bid.

For example, suppose that the original bid returned to court is $100,000 and Broker C brings in an overbid of $110,000 on which the sale is confirmed. The court approves a 6 percent commission, which yields $6,600 (6 percent of $110,000 = $6,600). Broker C receives $3,600, which consists of half of the commission on the original bid (half of 6 percent of $100,000 = $3,000) and all of the commission on the difference between the original bid and confirmed overbid ($110,000 – $100,000 = $10,000; 6 percent of $10,000 = $600). Broker A (the broker holding the exclusive contract) receives the other half of the commission on the original bid (half of 6 percent of $100,000 = $3,000).

Example 19. Exclusive listing contract; original bidder produced by Broker B; successful overbidder produced by Broker A. The personal representative enters into an exclusive contract with Broker A for the sale of real property of the estate. The contract provides for a commission to Broker A of 6 percent of the sale price. The bid returned to the court for

confirmation is made by a bidder produced by Broker B. At the confirmation hearing, the highest bid is made by a different bidder produced by Broker A. The court confirms the sale to the overbidder. Broker A is entitled to half of the commission on the original bid plus all of the commission on the overbid. See Section 10165(b). Broker B is entitled to the other half of the commission on the original bid. See Section 10165(c)(5).

For example, suppose that the original bid returned to court is $100,000 made by a bidder produced by Broker B. Broker A brings in an overbid of $110,000 on which the sale is confirmed. The court approves a 6 percent commission, which yields $6,600 (6 percent of $110,000 = $6,600). Broker A receives $3,600, which consists of half of the commission on the original bid (half of 6 percent of $100,000 = $3,000) and all of the commission on the difference between the original bid and confirmed overbid ($110,000 – $100,000 = $10,000; 6 percent of $10,000 = $600). Broker B receives the other half of the commission on the original bid (half of 6 percent of $100,000 = $3,000).

Background on Section 10161 of Repealed Code

Section 10161 was added by 1987 Cal. Stat. ch. 923 § 93. Subdivision (a) restated a portion of the fourth sentence of former Probate Code Section 760 (contract binding "for an amount to be allowed by the court"), a portion of former Probate Code Section 761.5 (overbidder's agent entitled to "reasonable compensation" fixed by the court), and a portion of the second and third sentences of former Probate Code Section 785 (overbidder's agent entitled to "reasonable compensation" fixed by the court) (provisions repealed by 1987 Cal. Stat. ch. 923 § 39), without substantive change. Subdivision (a) used language drawn primarily from the last portion of former Section 761.5. Subdivisions (b) and (c) were new provisions. For background on the provisions of this part, see the Comment to this part under the part heading.

§ 10162. Limitation on compensation of agent or broker producing successful overbidder

Comment. Section 10162 continues Section 10162 of the repealed Probate Code without change. For examples of the operation of this section, see Examples 4, 5, 13, and 18 in the Comment to Section 10161. As to orders made, or actions taken, before July 1, 1988, and matters pending on July 1, 1988, see Section 9645. As to the application of any amendments made after that date, see Section 3.

Background on Section 10162 of Repealed Code

Section 10162 was added by 1987 Cal. Stat. ch. 923 § 93. The section restated the fourth sentence of former Probate Code Section 785 (repealed by 1987 Cal. Stat. ch. 923 § 39) with the following changes:

(1) Section 10162 was limited to the case where the original bid returned to the court for confirmation is made by a person not produced by an agent or broker.

(2) Section 10162 covered sales of real and personal property. Former Section 785 applied only to real property sales.

(3) Section 10162 did not limit the compensation of the agent or broker who holds a contract under Section 10150 granting him or her the exclusive right to sell the property. Former Section 785 did not limit the compensation of the agent or broker who held the contract with the personal representative, whether or not the contract granted the exclusive right to sell the property.

For background on the provisions of this part, see the Comment to this part under the part heading.

§ 10162.3. Compensation where there is no exclusive contract and sale is made to purchaser produced by agent or broker on bid returned to court or on overbid

Comment. Section 10162.3 continues Section 10162.3 of the repealed Probate Code without change. This section provides the rule that applies where there is no exclusive contract and the sale is made on a bid returned to the court by a purchaser produced by an agent or broker. The reference to Section 10161 in Section 10162.3 recognizes that the court has discretion to determine the total amount of compensation to be paid. Under subdivision (b), where the original bidder becomes the successful overbidder at the end of the auction in court, the agent or broker is entitled to compensation on the full amount for which the sale is confirmed. For examples of the operation of this section, see Examples 1, 10, and 15 in the Comment to Section 10161.

As to orders made, or actions taken, before July 1, 1988, and matters pending on July 1, 1988, see Section 9645. As to the application of any amendments made after that date, see Section 3.

Background on Section 10162.3 of Repealed Code

Section 10162.3 was added by 1987 Cal. Stat. ch. 923 § 93 and amended by 1989 Cal. Stat. ch. 544 § 11. The 1989 amendment to Section 10162.3 revised subdivision (a)(3) to provide for the compensation in a situation where the sale is confirmed to a successful overbidder produced by an agent or broker and who also made the original bid returned to the court for confirmation. The 1989 amendment also replaced the word "person" in Section 10162.3(a)(2) with "purchaser" for consistency with subdivision (a)(3).

For background on the provisions of this part, see the Comment to this part under the part heading.

§ 10162.5. Compensation where there is an exclusive contract and no other broker or agent is involved in sale

Comment. Section 10162.5 continues Section 10162.5 of the repealed Probate Code without change, except that the introductory clause is added to subdivision (a) to recognize the special rules in Section 10162.6 (exclusive contract providing that no compensation payable if sale confirmed to particular person named in contract). This section provides the rules that apply where there is an exclusive contract and no other agent or broker produces the purchaser to whom the sale is confirmed.

The reference to Section 10161 in Section 10162.5 recognizes that the court has discretion to determine the amount of compensation to be paid. For examples of the operation of this section, see Examples 2, 11, and 12 in the Comment to Section 10161.

Under subdivision (a)(2), where the original bidder becomes the successful overbidder at the end of the auction in court, the agent or broker holding the exclusive listing contract is entitled to compensation on the full amount for which the sale is confirmed. For an illustration of the application of the rule in subdivision (b), see Example 2 in the Comment to Section 10161.

As to orders made, or actions taken, before July 1, 1988, and matters pending on July 1, 1988, see Section 9645. As to the application of any amendments made after that date, see Section 3.

Background on Section 10162.5 of Repealed Code

Section 10162.5 was added by 1987 Cal. Stat. ch. 923 § 93 and amended by 1989 Cal. Stat. ch. 544 § 12. The 1989 amendment revised subdivision (a) to provide for the compensation in a situation where the sale is confirmed to a successful overbidder produced by the agent or broker holding the contract and who also made the original bid returned to the court for confirmation. The 1989 amendment also revised subdivision (b)(1) to apply the rule in subdivision (b) to situations where the bid returned to court is produced by an agent with an exclusive listing. The 1989 amendment replaced the word "person" in subdivisions (a)(1) and (b)(1) with "purchaser" for consistency with the remainder of the section. For background on the provisions of this part, see the Comment to this part under the part heading.

§ 10162.6. Exclusive contract providing that no compensation payable if sale confirmed to particular purchaser named in contract

Comment. Section 10162.6 is new, and deals with the situation where the personal representative makes an exclusive listing contract with a broker (Broker A) to sell estate property, but the contract provides that no commission is payable to Broker A if sale is confirmed to a particular purchaser (or purchasers) named in the contract. See subdivision (a). Special rules apply in this situation, as provided in subdivisions (b) and (c).

Subdivision (b) applies to the situation where the sale is made to the purchaser named in the contract. In this case, Broker A is not entitled to any commission, even if Broker A produced the original bid returned to the court. Under subdivision (b), if sale is confirmed to the named person, the commission that would have been paid to Broker A, except for the limitation in the contract, is not paid. In this case, the estate receives the benefit of the commission, just as if the estate were acting as the agent with the exclusive listing contract. The compensation due any

other brokers involved in the sale is determined under the normal rules that apply where there is a broker with an exclusive listing contract.

Subdivision (c) makes clear that the limitation in the exclusive listing contract does not affect the compensation of the broker holding the contract or any other brokers in a case where the sale is not made to the person named in the exclusive listing contract. In such case, the rules governing compensation where there is an exclusive listing contract apply and the limitation concerning the person named in the contract is ignored.

The following examples illustrate the application of this section. In these examples, Broker A refers to the broker holding the exclusive listing contract with the limitation that no compensation is due Broker A if sale is made to Bidder X. Broker B refers to a broker who does not hold a contract with the personal representative and who produces the bid returned to the court for confirmation. Broker C refers to a broker who does not have a contract with the personal representative and who produces a successful overbid.

Example 1. Exclusive listing contract excluding compensation if sale to Bidder X; Bidder X is original bidder, not produced by broker; no overbid. The original bid returned to court for confirmation is made by Bidder X who is not represented by a broker. The sale is confirmed to the original bidder on that bid. Under subdivision (b) and Section 10162.5(a), no commission is payable. This example is comparable to Example 11 in the Comment to Section 10161, except that Broker A receives no compensation.

Example 2. Exclusive listing contract excluding compensation if sale to Bidder X; Bidder X produced by Broker B; no overbid. The original bid returned to court for confirmation is made by Bidder X produced by Broker B. The sale is confirmed to that bidder on that bid. The reasonable compensation allowed by the court on the amount for which the sale is confirmed is divided equally. Under subdivision (b) and Section 10162.7, one-half of the commission is paid to Broker B and the other half, which would have been paid to Broker A except for the limitation in the contract, is not paid. This example is comparable to Example 14 in the Comment to Section 10161, except that Broker A receives no compensation.

Example 3. Exclusive listing contract excluding compensation if sale to Bidder X; original bidder not produced by broker; successful overbid by Bidder X, not produced by broker. The original bid returned to court for confirmation is made by a bidder who is not represented by a broker. At the confirmation hearing, the highest bid is made by Bidder X who is

not produced by a broker. The court confirms the sale to Bidder X. Under subdivision (b) and Section 10162.5(b), no commission is payable. This example is comparable to Example 12 in the Comment to Section 10161, except that Broker A receives no compensation.

The result would be the same where the original bidder in this example is produced by Broker A.

Example 4. Exclusive listing contract excluding compensation if sale to Bidder X; original bidder not produced by broker; successful overbid by Bidder X produced by Broker C. The original bid returned to court for confirmation is made by a bidder who is not represented by a broker. At the confirmation hearing, the highest bid is made by Bidder X who is produced by Broker C. The court confirms the sale to Bidder X. Under subdivision (b), and subject to Section 10162, Broker C is entitled to half of the commission on the original bid plus all of the commission on the overbid; the other half of the commission on the original bid is not paid. See Section 10165(a)(2), (b), (c)(4). This example is comparable to Example 13 in the Comment to Section 10161, except that Broker A receives no compensation.

The result would be the same where the original bidder in this example is produced by Broker A.

Example 5. Exclusive listing contract excluding compensation if sale to Bidder X; original bidder produced by Broker B; successful overbid by Bidder X not produced by broker. The original bid returned to court for confirmation is made by a bidder produced by Broker B. At the confirmation hearing, the highest bid is made by Bidder X who is not produced by a broker. The court confirms the sale to Bidder X. Under subdivision (b) and Section 10164(c), Broker B is entitled to half of the commission on the original bid. The other half of the commission on the original bid is not paid. This example is comparable to Example 3 in the Comment to Section 10161, except that Broker A receives no compensation.

Example 6. Exclusive listing contract excluding compensation if sale to Bidder X; original bidder produced by Broker B; successful overbid by Bidder X produced by Broker C. The original bid returned to court for confirmation is made by a bidder produced by Broker B. At the confirmation hearing, the highest bid is made by Bidder X who is produced by Broker C. The court confirms the sale to Bidder X. Under subdivision (b), Broker B is entitled to one-fourth of the commission on the original bid and Broker C is entitled to half of the commission on the original bid plus all of the commission on the overbid. The other fourth of the commission on the original bid is not paid. See Section

10165(a)(1), (b), (c)(3). This example is comparable to Example 8 in the Comment to Section 10161, except that Broker A receives no compensation.

Example 7. Exclusive listing contract excluding compensation if sale to Bidder X; original bid by Bidder X, not produced by broker; successful overbidder not produced by broker. The original bid returned to court for confirmation is made by Bidder X who is not represented by a broker. At the confirmation hearing, the highest bid is made by a different bidder not produced by a broker. The court confirms the sale to the overbidder. Under subdivision (c) and Section 10162.5(b), Broker A receives a commission on the amount of the original bid and the limitation in the contract has no effect. This result in this example is the same as Example 12 in the Comment to Section 10161.

Example 8. Exclusive listing contract excluding compensation if sale to Bidder X; original bid by Bidder X produced by Broker B; successful overbidder not produced by broker. The original bid returned to court for confirmation is made by Bidder X produced by Broker B. At the confirmation hearing, the highest bid is made by a different bidder not produced by a broker. The court confirms the sale to the overbidder. Under subdivision (c), the commission on the original bid is divided equally between Broker A and Broker B. The limitation in the contract has no effect. This result in this example is the same as Example 3 in the Comment to Section 10161.

§ 10162.7. Compensation where there is an exclusive contract and sale is made to purchaser produced by another agent or broker on bid returned to court or on overbid

Comment. Section 10162.7 continues Section 10162.7 of the repealed Probate Code without change, except that the introductory clause is added to subdivision (a) to recognize the special rules in Section 10162.6 (exclusive contract providing that no compensation payable if sale confirmed to particular person named in contract). This section provides the rule that applies where there is an exclusive contract and the sale is made to a purchaser produced by another agent or broker on the bid returned to court or on an overbid by the same purchaser. The reference to Section 10161 in Section 10162.7 recognizes that the court has discretion to determine the total amount of compensation to be paid. Under subdivision (b), in the absence of an agreement between the two brokers, they split the commission on the amount of the original bid and the broker representing the successful overbidder receives all of the commission on the overbid. For examples of the operation of this section, see Examples 14, 16, and 17 in the Comment to Section 10161.

As to orders made, or actions taken, before July 1, 1988, and matters pending on July 1, 1988, see Section 9645. As to the application of any amendments made after that date, see Section 3.

Background on Section 10162.7 of Repealed Code

Section 10162.7 was added by 1987 Cal. Stat. ch. 923 § 93 and amended by 1989 Cal. Stat. ch. 544 § 13. The 1989 amendment revised subdivisions (a)(3) and (b) of Section 10162.7 to provide for the compensation in a situation where there is an agent or broker holding an exclusive listing contract and the sale is confirmed to a successful overbidder (produced by another agent or broker) who also made the original bid returned to the court for confirmation. For background on the provisions of this part, see the Comment to this part under the part heading.

§ 10163. Compensation where original bid made by purchaser not produced by agent or broker and sale made to overbidder produced by agent or broker

Comment. Section 10163 continues Section 10163 of the repealed Probate Code without change, except that the introductory clause of subdivision (a) is revised to recognize the special rules in Section 10162.6 (exclusive contract providing that no compensation payable if sale confirmed to particular person named in contract). The reference to Section 10161 in Section 10163 makes clear that the court has discretion to determine the total amount of compensation to be paid. Section 10163 applies where there is no agent or broker holding an exclusive right to sell the property or where the agent or broker representing the overbidder holds an exclusive right to sell the property. For examples of the operation of this section, see Examples 4 and 5 in the Comment to Section 10161. For a limitation on the amount of compensation that may be allowed to the agent or broker who produces the successful overbidder, see Section 10162.

As to orders made, or actions taken, before July 1, 1988, and matters pending on July 1, 1988, see Section 9645. As to the application of any amendments made after that date, see Section 3.

Background on Section 10163 of Repealed Code

Section 10163 was added by 1987 Cal. Stat. ch. 923 § 93 and amended by 1989 Cal. Stat. ch. 544 § 14. Section 10163 restated the substance of former Probate Code Section 761.5 (repealed by 1987 Cal. Stat. ch. 923 § 39). Section 10163 referred to Section 10161 which restated the last portion of former Section 761.5 without substantive change. The 1989 amendment extended the rule of Section 10163 to cases where the successful overbidder is produced by an agent or broker holding an exclusive listing contract. For background on the provisions of this part, see the Comment to this part under the part heading.

§ 10164. Compensation where sale made on increased bid by purchaser not produced by agent or broker

Comment. Section 10164 continues Section 10164 of the repealed Probate Code without change. The references to Section 10161 in

Section 10164 make clear that the court has discretion to determine the total amount of compensation to be paid and allocated. For examples of the operation of Section 10164, see Examples 2, 3, and 7 in the Comment to Section 10161.

As to orders made, or actions taken, before July 1, 1988, and matters pending on July 1, 1988, see Section 9645. As to the application of any amendments made after that date, see Section 3.

Background on Section 10164 of Repealed Code

Section 10164 was added by 1987 Cal. Stat. ch. 923 § 93. Subdivision (b) restated the last sentence of former Probate Code Section 761 (repealed by 1987 Cal. Stat. ch. 923 § 39) without substantive change. Subdivision (c) was a new provision that covered the situation where an agent or broker holds an exclusive right to sell contract and the original bid returned to the court is made by a purchaser who was produced by another agent or broker. Former Section 761 failed to cover this situation. If there is an agreement concerning the sharing of commissions, subdivision (c) of Section 10164 required that the court divide the commission as provided in the agreement, rather than requiring the court to "give consideration" to the agreement as under the second sentence of former Probate Code Section 760 (repealed by 1987 Cal. Stat. ch. 923 § 39). For background on the provisions of this part, see the Comment to this part under the part heading.

§ 10165. Sale made on increased bid by purchaser produced by agent or broker; compensation where original bid returned to court made by a purchaser produced by another agent or broker; compensation where another agent or broker holds exclusive right to sell contract

Comment. Section 10165 continues Section 10165 of the repealed Probate Code without substantive change. The introductory clause is added to subdivision (a) to recognize the special rules in Section 10162.6 (exclusive contract providing that no compensation payable if sale confirmed to particular person named in contract). Subdivision (a) describes the circumstances that must exist before Section 10165 applies. The section applies only where the court confirms a sale on an increased bid made at the time of the hearing on the petition for confirmation. The successful overbidder must be one produced by a bona fide agent or broker. In addition, before the section applies one of the following requirements also must be satisfied:

(1) The original bid returned to court for confirmation was made by a purchaser who was produced by another agent or broker (i.e., an agent or broker other than the one who produced the successful overbidder).

(2) An agent or broker (other than the one who produced the successful overbidder) holds an exclusive sales contract. All that is required to satisfy this requirement is that an exclusive right to sell the property has been granted to the agent or broker; there is no requirement that the agent

or broker holding the exclusive sales contract have produced the purchaser whose original bid was returned to the court for confirmation.

The reference in subdivision (a) to Section 10161 makes clear that the court has discretion to determine the total amount of compensation to be allocated under Section 10165. See the Comment to Section 10161. If there is an agreement concerning the sharing of commissions, subdivision (c) requires that the court divide the commission as provided in the agreement. Paragraph (3) of subdivision (c) makes clear that the agent or broker holding an exclusive right to sell contract is allowed a commission whether or not he or she returns a bid to the court. If the agent or broker who holds the contract under Section 10150 has not been granted an exclusive right to sell the property, the agent or broker is allowed a commission only if he or she returns the original bid to the court or produces the successful overbidder to whom the sale of the property is confirmed at the confirmation hearing. See Section 10161(b). For examples of the operation of this section, see Examples 6, 8, 9, 13, 18, and 19 in the Comment to Section 10161.

As to orders made, or actions taken, before July 1, 1988, and matters pending on July 1, 1988, see Section 9645. As to the application of any amendments made after that date, see Section 3.

Background on Section 10165 of Repealed Code

Section 10165 was added by 1987 Cal. Stat. ch. 923 § 93 and amended by 1989 Cal. Stat. ch. 544 § 15. Subdivision (a) was a new provision that described the circumstances that must exist before Section 10165 applied. Subdivision (b) restated a portion of the first sentence of former Probate Code Section 761 (repealed by 1987 Cal. Stat. ch. 923 § 39) without substantive change. Paragraphs (1) and (2) of subdivision (c) restated a portion of the first sentence of former Section 761 without substantive change. Paragraph (3) of subdivision (c) was a new provision that covered the situation where an agent or broker holds an exclusive right to sell contract and the original bid returned to the court is made by a purchaser who was produced by another agent or broker. Former Section 761 failed to cover this situation. Paragraph (3) made clear that the agent or broker holding an exclusive right to sell contract is allowed a commission whether or not he or she returns a bid to the court. In this respect, paragraph (3) was consistent with what appears to have been prior law. See 1 H. Miller & M. Starr, Current Law of California Real Estate § 2:50, at 301 (rev. ed. 1975). If there is an agreement concerning the sharing of commissions, subdivision (c) required that the court divide the commission as provided in the agreement, rather than requiring the court to "give consideration" to the agreement as was the case under the second sentence of former Probate Code Section 760 (repealed by 1987 Cal. Stat. ch. 923 § 39).

The 1989 amendment revised Section 10165 by adding paragraphs (4) and (5) to subdivision (c) to cover situations not previously covered in Section 10165. Subdivision (a)(2) was amended to clarify the application of the section.

For background on the provisions of this part, see the Comment to this part under the part heading.

§ 10166. Condition of bid that certain amount of bid be paid to agent or broker

Comment. Section 10166 continues Section 10166 of the repealed Probate Code without change. As to orders made, or actions taken, before July 1, 1988, and matters pending on July 1, 1988, see Section 9645. As to the application of any amendments made after that date, see Section 3.

Background on Section 10166 of Repealed Code

Section 10166 was added by 1987 Cal. Stat. ch. 923 § 93. The section restated the last portion of the sixth sentence of former Probate Code Section 785 (real property) (repealed by 1987 Cal. Stat. ch. 923 § 39) without substantive change, and generalized it to apply also to sales of personal property. For background on the provisions of this part, see the Comment to this part under the part heading.

§ 10167. Compensation and expenses of auctioneer

Comment. Section 10167 continues Section 10167 of the repealed Probate Code without change. The language used in this section is comparable to the language used in Section 10161 (compensation of agent or broker). The compensation to an auctioneer may be for the sale of personal property only. See Section 10151. As to orders made, or actions taken, before July 1, 1988, and matters pending on July 1, 1988, see Section 9645. As to the application of any amendments made after that date, see Section 3.

Background on Section 10167 of Repealed Code

Section 10167 was a new provision added by 1987 Cal. Stat. ch. 923 § 93. The section was consistent with the second sentence of former Probate Code Section 760.5 (auctioneer's fee "to be determined by the court") (repealed by 1987 Cal. Stat. ch. 923 § 39). For background on the provisions of this part, see the Comment to this part under the part heading.

Article 4. Special Provisions Applicable to Particular Types of Property

§ 10200. Sale or surrender for redemption or conversion of securities

Comment. Section 10200 continues Section 10200 of the repealed Probate Code without change. The personal representative is required to exercise the power granted by this section to the extent that ordinary care and diligence require that the power be exercised and may not exercise the power to the extent that ordinary care and diligence require that the power not be exercised. See Section 9600(b). As to the effect of court authorization or approval, see Section 7250. See also Section 10201 (sale or withdrawal of savings accounts and mutual capital certificates without court order). For general provisions, see Sections 1000-1004

(rules of practice), 1020-1023 (petitions and other papers), 1040-1050 (hearings and orders), 1200-1230 (notice of hearing), 1250-1252 (request for special notice), 1260-1265 (proof of giving of notice). As to orders made, or actions taken, before July 1, 1988, and matters pending on July 1, 1988, see Section 9645. As to the application of any amendments made after that date, see Section 3.

Background on Section 10200 of Repealed Code

Section 10200 was added by 1987 Cal. Stat. ch. 923 § 93. The section restated subdivisions (a) and (b) of former Probate Code Section 771 (repealed by 1987 Cal. Stat. ch. 923 § 39) without substantive change, except that (1) the first sentence of subdivision (c) and paragraph (3) of subdivision (e) were new, and (2) Section 10200 required that notice under subdivision (d) be given at least 15 days before the hearing pursuant to Sections 1220 and 1230 instead of at least 10 days before the hearing as required under former Probate Code Sections 1200 and 1200.5 (provisions repealed by 1987 Cal. Stat. ch. 923 § 59). For background on the provisions of this part, see the Comment to this part under the part heading.

§ 10201. Sale or withdrawal of savings accounts and mutual capital certificates

Comment. Section 10201 continues Section 10201 of the repealed Probate Code without substantive change. As to orders made, or actions taken, before July 1, 1988, and matters pending on July 1, 1988, see Section 9645. As to the application of any amendments made after that date, see Section 3.

Background on Section 10201 of Repealed Code

Section 10201 was added by 1987 Cal. Stat. ch. 923 § 93. Subdivisions (a) and (b) restated subdivision (c) of former Probate Code Section 771 (repealed by 1987 Cal. Stat. ch. 923 § 39) without substantive change. Subdivision (c) was new. For background on the provisions of this part, see the Comment to this part under the part heading.

§ 10202. Sale of subscription rights

Comment. Section 10202 continues Section 10202 of the repealed Probate Code without change. The personal representative is required to exercise the power granted by this section to the extent that ordinary care and diligence require that the power be exercised and may not exercise the power to the extent that ordinary care and diligence require that the power not be exercised. See Section 9600(b). See also Sections 9734 (exercise of option rights), 9737 (exercise of subscription rights). As to orders made, or actions taken, before July 1, 1988, and matters pending on July 1, 1988, see Section 9645. As to the application of any amendments made after that date, see Section 3.

Background on Section 10202 of Repealed Code

Section 10202 was added by 1987 Cal. Stat. ch. 923 § 93. The section restated former Probate Code Section 771.5 (repealed by 1987 Cal. Stat. ch. 923 § 39) without substantive change except that language was added in Section 10202 to make clear that

notice of sale and confirmation of sale is not required. This new language made Section 10202 consistent with subdivision (e) of Section 10200 and with Section 10201. The words "stocks" and "bonds" which appeared in former Section 771.5 were omitted in view of the broad definition of "securities" provided in Section 70. For background on the provisions of this part, see the Comment to this part under the part heading.

§ 10203. Sale of decedent's leasehold interest

Comment. Section 10203 continues Section 10203 of the repealed Probate Code without change. The second sentence of paragraph (1) of subdivision (b) is consistent with subdivision (b) of Section 9940 (leasing property of estate). As to orders made, or actions taken, before July 1, 1988, and matters pending on July 1, 1988, see Section 9645. As to the application of any amendments made after that date, see Section 3.

Background on Section 10203 of Repealed Code

Section 10203 was added by 1987 Cal. Stat. ch. 923 § 93. The section continued former Probate Code Section 754.6 (repealed by 1987 Cal. Stat. ch. 923 § 39) without substantive change, except that the second sentence of paragraph (1) of subdivision (b) of Section 10203 was new, and paragraph (3) of subdivision (b) of Section 10203 broadened the former provision to include, in addition to an oil or gas lease, a lease for the production of minerals, other hydrocarbon substances, or geothermal resources. This made Section 10203 consistent with Sections 9940(b) and 9946 (leases). For background on the provisions of this part, see the Comment to this part under the part heading.

§ 10204. Sale of decedent's partnership interest

Comment. Section 10204 continues Section 10204 of the repealed Probate Code without change. A partner's interest in the partnership is that partner's share of the profits and surplus and is itself personal property. Corp. Code § 15026; Kenworthy v. Hadden, 87 Cal. App. 3d 696, 701, 151 Cal. Rptr. 169 (1978); see generally Annot., 80 A.L.R.2d 1107 (1961 & Supp. 1989) (effect of Section 26 of the Uniform Partnership Act (1914) as converting realty into personalty). See also Section 10261 (confirmation of sale of partnership interest). As to orders made, or actions taken, before July 1, 1988, and matters pending on July 1, 1988, see Section 9645. As to the application of any amendments made after that date, see Section 3.

Background on Section 10204 of Repealed Code

Section 10204 was added by 1987 Cal. Stat. ch. 923 § 93. The section continued a portion of the first sentence of former Probate Code Section 774 (repealed by 1987 Cal. Stat. ch. 923 § 39) without substantive change. For background on the provisions of this part, see the Comment to this part under the part heading.

§ 10205. Sale of decedent's chose in action

Comment. Section 10205 continues Section 10205 of the repealed Probate Code without change. As to orders made, or actions taken, before July 1, 1988, and matters pending on July 1, 1988, see Section

9645. As to the application of any amendments made after that date, see Section 3.

Background on Section 10205 of Repealed Code

Section 10205 was added by 1987 Cal. Stat. ch. 923 § 93. The section continued a portion of the first sentence of former Probate Code Section 774 (repealed by 1987 Cal. Stat. ch. 923 § 39) without substantive change. For background on the provisions of this part, see the Comment to this part under the part heading.

§ 10206. Sale of decedent's contract right to purchase real property

Comment. Section 10206 continues Section 10206 of the repealed Probate Code without substantive change. The reference to the "judge" approving the sureties on the bond has been omitted as unnecessary in view of Code of Civil Procedure Section 166((a)(5)(powers of judge at chambers).

The bond covers whatever is required under the contract to be paid. This includes, for example, both principal and interest payments required to be made under the contract. See also Section 10314 (assignment of contract right to purchaser after furnishing of bond and confirmation of sale).

Treating the sale of the decedent's contract right to purchase real property in the same manner as sale of real property generally is consistent with the general treatment of such interests as real property at the decedent's death. See Fleishman v. Woods, 135 Cal. 256, 259, 67 P. 276 (1901) (equitable estate of vendee "is alienable, descendible, and devisable in like manner as real estate held by a legal title"); Retsloff v. Smith, 79 Cal. App. 443, 448, 249 P. 886 (1926) ("[i]f the purchaser dies while the contract is in force and effect, his interest passes to his heirs as real property").

As to orders made, or actions taken, before July 1, 1988, and matters pending on July 1, 1988, see Section 9645. As to the application of any amendments made after that date, see Section 3.

Background on Section 10206 of Repealed Code

Section 10206 was added by 1987 Cal. Stat. ch. 923 § 93. Subdivision (a) restated former Probate Code Section 800 (repealed by 1987 Cal. Stat. ch. 923 § 39) without substantive change. The remainder of Section 10206 restated former Probate Code Section 801 (repealed by 1987 Cal. Stat. ch. 923 § 39) without substantive change. For background on the provisions of this part, see the Comment to this part under the part heading.

§ 10207. Sale to grazing or pasture association in conformity with the federal Consolidated Farm and Rural Development Act

Comment. Section 10207 continues Section 10207 of the repealed Probate Code without change. For general provisions, see Sections 1000-1004 (rules of practice), 1020-1023 (petitions and other papers),

1040-1050 (hearings and orders), 1200-1230 (notice of hearing), 1250-1252 (request for special notice), 1260-1265 (proof of giving of notice).

Subdivision (a) of former Probate Code Section 794 (repealed by 1987 Cal. Stat. ch. 923 § 39) (finding and declaration of legislative purpose) from which Section 10207 was drawn is not continued as a codified provision, but may be found in 1978 Cal. Stat. ch. 40.

As to orders made, or actions taken, before July 1, 1988, and matters pending on July 1, 1988, see Section 9645. As to the application of any amendments made after that date, see Section 3.

Background on Section 10207 of Repealed Code

Section 10207 was added by 1987 Cal. Stat. ch. 923 § 93. The section restated subdivision (b) of former Probate Code Section 794 (repealed by 1987 Cal. Stat. ch. 923 § 39) with the addition of subdivision (b) and language that makes clear that the sale may be made only with the consent of the "known" heirs and the "known" devisees. For background on the provisions of this part, see the Comment to this part under the part heading.

Article 5. Sale of Personal Property

§ 10250. Notice of sale

Comment. Section 10250 continues Section 10250 of the repealed Probate Code without change. As to when property of the estate may or must be sold, see Sections 10000, 10001. See also Section 10251 (shortening time of notice of sale). For provisions permitting sale of personal property without notice of sale, see Sections 10200 (securities), 10201 (savings accounts and mutual capital certificates), 10202 (subscription rights), 10252 (perishable property; property directed or authorized by will to be sold; property sold to pay family allowance). See also Section 9640 (independent administration authority not limited). As to orders made, or actions taken, before July 1, 1988, and matters pending on July 1, 1988, see Section 9645. As to the application of any amendments made after that date, see Section 3.

Background on Section 10250 of Repealed Code

Section 10250 was added by 1987 Cal. Stat. ch. 923 § 93. The section restated the first sentence of former Probate Code Section 772 (repealed by 1987 Cal. Stat. ch. 923 § 39) without substantive change, except that subdivision (a) extended the former 10-day period for posting of notice of sale to 15 days. For background on the provisions of this part, see the Comment to this part under the part heading.

§ 10251. Shortening time of notice of sale

Comment. Section 10251 continues Section 10251 of the repealed Probate Code without change. As to orders made, or actions taken, before July 1, 1988, and matters pending on July 1, 1988, see Section 9645. As to the application of any amendments made after that date, see Section 3.

Background on Section 10251 of Repealed Code

Section 10251 was added by 1987 Cal. Stat. ch. 923 § 93. The section restated the second sentence of former Probate Code Section 772 (repealed by 1987 Cal. Stat. ch. 923 § 39) without substantive change. The reference in Section 10251 to a court "or judge" was drawn from former Probate Code Section 782 (real property) (repealed by 1987 Cal. Stat. ch. 923 § 39). For background on the provisions of this part, see the Comment to this part under the part heading.

§ 10252. Sale without notice

Comment. Section 10252 continues Section 10252 of the repealed Probate Code without change. Under Section 10252, it is not necessary that the will specifically grant the personal representative authority to sell without notice. If the will directs or authorizes the sale, whether or not notice should be given is within the discretion of the personal representative. See Bagley v. City and County of San Francisco, 19 Cal. App. 255, 271, 125 P. 931 (1912). However, unless there is some other statutory provision dispensing with the need for confirmation of the sale in the particular case, a sale of personal property made pursuant to a direction or authorization in the will must be confirmed by the court before title to the property passes to the purchaser. See Section 10260. For other provisions permitting sale of personal property without notice of sale, see Sections 10200 (securities), 10201 (savings accounts and mutual capital certificates), 10202 (subscription rights). As to orders made, or actions taken, before July 1, 1988, and matters pending on July 1, 1988, see Section 9645. As to the application of any amendments made after that date, see Section 3.

Background on Section 10252 of Repealed Code

Section 10252 was added by 1987 Cal. Stat. ch. 923 § 93. Subdivisions (a) and (b) restated a portion of the first sentence of former Probate Code Section 757 (repealed by 1987 Cal. Stat. ch. 923 § 39) without substantive change. Subdivisions (c) and (d) restated the first portion of former Probate Code Section 770 (repealed by 1987 Cal. Stat. ch. 923 § 39) without substantive change. For background on the provisions of this part, see the Comment to this part under the part heading.

§ 10253. Contents of notice of sale

Comment. Section 10253 continues Section 10253 of the repealed Probate Code without change. As to orders made, or actions taken, before July 1, 1988, and matters pending on July 1, 1988, see Section 9645. As to the application of any amendments made after that date, see Section 3.

Background on Section 10253 of Repealed Code

Section 10253 was added by 1987 Cal. Stat. ch. 923 § 93. Subdivision (a) restated the third sentence and a portion of the fourth sentence of former Probate Code Section 772 (repealed by 1987 Cal. Stat. ch. 923 § 39) without substantive change. Subdivision (b) was new and codified the prior practice. For background on the provisions of this part, see the Comment to this part under the part heading.

§ 10254. Sale at public auction

Comment. Section 10254 continues Section 10254 of the repealed Probate Code without substantive change. Under paragraph (1) of subdivision (b), the court may order, for example, that rare art works be sold in some other country when to do so will afford a better market. See also Section 10151 (manner of sale pursuant to contract with auctioneer). For the provision concerning passage of title to personal property sold at public auction without court confirmation or approval, see Section 10259. The overbid provision does not apply where property is sold at public auction. See Sections 10259(b), 10262(c). For general provisions relating to petitions, see Sections 1020-1023. As to orders made, or actions taken, before July 1, 1988, and matters pending on July 1, 1988, see Section 9645. As to the application of any amendments made after that date, see Section 3.

Background on Section 10254 of Repealed Code

Section 10254 was added by 1987 Cal. Stat. ch. 923 § 93. The section restated the fifth, sixth, and seventh sentences of former Probate Code Section 772 (repealed by 1987 Cal. Stat. ch. 923 § 39) without substantive change, except that the former requirement that personal property be present at the time of sale was limited by Section 10254 to "tangible" personal property, and the authority for the court to order that the auction be held somewhere other than as required in paragraph (1) of subdivision (a) was new. For background on the provisions of this part, see the Comment to this part under the part heading.

§ 10255. Private sale

Comment. Section 10255 continues Section 10255 of the repealed Probate Code without change. Subdivision (b) permits the notice of sale to require, for example, that bids be delivered to the attorney for the personal representative. As to orders made, or actions taken, before July 1, 1988, and matters pending on July 1, 1988, see Section 9645. As to the application of any amendments made after that date, see Section 3.

Background on Section 10255 of Repealed Code

Section 10255 was added by 1987 Cal. Stat. ch. 923 § 93. Subdivision (a) restated a portion of the fourth sentence of former Probate Code Section 772 (repealed by 1987 Cal. Stat. ch. 923 § 39). Subdivision (b) was new and codified existing practice. For background on the provisions of this part, see the Comment to this part under the part heading.

§ 10256. Bids to comply with notice of sale

Comment. Section 10256 continues Section 10256 of the repealed Probate Code without change. This section is consistent with prior case law. See In re Estate of Dargie, 33 Cal. App. 2d 148, 155-57, 91 P.2d 126 (1939) (personal property); cf. Estate of Hunter, 194 Cal. App. 2d 859, 865-68, 15 Cal. Rptr. 556 (1961) (real property). For the section prescribing required and optional contents of the notice of sale, see

Section 10253. As to orders made, or actions taken, before July 1, 1988, and matters pending on July 1, 1988, see Section 9645. As to the application of any amendments made after that date, see Section 3.

Background on Section 10256 of Repealed Code

Section 10256 was a new provision added by 1987 Cal. Stat. ch. 923 § 93. For background on the provisions of this part, see the Comment to this part under the part heading.

§ 10257. Sale for cash or on credit

Comment. Section 10257 continues Section 10257 of the repealed Probate Code without change. Concerning the requirement that 25 percent of the purchase price be paid in cash at the time of sale, see Consolidated Copperstate Lines v. Frasher, 141 Cal. App. 2d 916, 924-26, 297 P.2d 692 (1956). See also Section 10258 (court order relaxing requirements for credit sale). As to orders made, or actions taken, before July 1, 1988, and matters pending on July 1, 1988, see Section 9645. As to the application of any amendments made after that date, see Section 3.

Background on Section 10257 of Repealed Code

Section 10257 was added by 1987 Cal. Stat. ch. 923 § 93. Subdivisions (a), (b), and (c) restated the first, second, third, and fourth sentences of former Probate Code Section 773 (repealed by 1987 Cal. Stat. ch. 923 § 39) without substantive change. "Security interest" was substituted in Section 10257 for "pledge" and "chattel mortgage" which appeared in former Section 773. Under the California Commercial Code, the security interest replaces the pledge and chattel mortgage. See California State Bar Committee on the Commercial Code, *A Special Report, The Uniform Commercial Code,* 37 Cal. St. B.J. 117, 198-99 (1962). Subdivision (d) restated the second and third sentences of former Probate Code Section 787 (repealed by 1987 Cal. Stat. ch. 923 § 39) without substantive change as it applied to personal property. For background on the provisions of this part, see the Comment to this part under the part heading.

§ 10258. Court order relaxing requirements for credit sale

Comment. Section 10258 continues Section 10258 of the repealed Probate Code without substantive change. This section permits the court to vary the requirements of Section 10257 where it is impractical to meet those requirements, such as in the sale of an insurance business, a liquor license, the goodwill of a business, or the stock in trade of a merchant. Only the personal representative may petition under Section 10258. An interested person may neither petition under Section 10258 nor petition for instructions under Section 9611. But see Section 9613 (right of interested person to petition for order directing personal representative in order to avoid great or irreparable injury). For general provisions, see Sections 1000-1004 (rules of practice), 1020-1023 (petitions and other papers), 1040-1050 (hearings and orders), 1200-1230 (notice of hearing), 1250-1252 (request for special notice), 1260-1265 (proof of giving of

notice). As to orders made, or actions taken, before July 1, 1988, and matters pending on July 1, 1988, see Section 9645. As to the application of any amendments made after that date, see Section 3.

Background on Section 10258 of Repealed Code

Section 10258 was added by 1987 Cal. Stat. ch. 923 § 93. The section restated the fifth, sixth, seventh, and eighth sentences of former Probate Code Section 773 (repealed by 1987 Cal. Stat. ch. 923 § 39) without substantive change, except that subdivisions (b) and (c) of Section 10258 required that notice be given at least 15 days before the hearing pursuant to Probate Code Sections 1220 and 1230 instead of at least 10 days before the hearing as required under former Probate Code Sections 1200 and 1200.5 (provisions repealed by 1987 Cal. Stat. ch. 923 § 59). For background on the provisions of this part, see the Comment to this part under the part heading.

§ 10259. Passage of title without court confirmation

Comment. Section 10259 continues Section 10259 of the repealed Probate Code without change. For other provisions dispensing with the requirement of court confirmation, see Sections 10200 (securities), 10201 (mutual capital certificates, savings accounts), 10202 (subscription rights). For special confirmation provisions, see Sections 10206 (decedent's interest under contract to purchase real property), 10207 (property sold to grazing or pasture association). As to orders made, or actions taken, before July 1, 1988, and matters pending on July 1, 1988, see Section 9645. As to the application of any amendments made after that date, see Section 3.

Background on Section 10259 of Repealed Code

Section 10259 was added by 1987 Cal. Stat. ch. 923 § 93. The section restated a portion of former Probate Code Section 770 and the last sentence of former Probate Code Section 772 (provisions repealed by 1987 Cal. Stat. ch. 923 § 39) without substantive change. Paragraph (2) of subdivision (b) was new and reflected the expansion of the authority to sell at public auction to include intangible personal property. See Section 10254. For background on the provisions of this part, see the Comment to this part under the part heading.

§ 10260. Report of sale and petition for confirmation of sale

Comment. Section 10260 continues Section 10260 of the repealed Probate Code without change. For provisions dispensing with the requirement of court confirmation, see Sections 10200 (securities), 10201 (mutual capital certificates; savings accounts), 10202 (subscription rights), 10259 (personal property which is perishable, which will depreciate in value if not disposed of promptly, or which will incur loss or expense by being kept; personal property the sale of which is necessary to provide for the payment of a family allowance pending receipt of other sufficient funds; personal property sold at public auction). See also Sections 10150 (liability on contract with agent or broker), 10151 (liability on contract with auctioneer), 10160-10167

(compensation of agent, broker, or auctioneer). For general provisions, see Sections 1000-1004 (rules of practice), 1020-1023 (petitions and other papers), 1040-1050 (hearings and orders), 1200-1230 (notice of hearing), 1250-1252 (request for special notice), 1260-1265 (proof of giving of notice).

When property is directed by the will to be sold, or authority is given in the will to sell property, the personal representative may sell the property with or without notice of sale (Section 10252), but the personal representative must make a return of sale and obtain confirmation of the sale as in other cases and no title passes until the sale is confirmed by the court. See the last portion of subdivision (a) of Section 10260. See also Section 10261(a) (when sale is directed or authorized by will, necessity and advantage of sale need not be shown at hearing on petition for confirmation of the sale). The provision for overbids at the confirmation hearing also applies to a sale authorized or directed by the will. See Section 10262. However, if the will provides for the mode of sale, the directions in the will must be followed unless the court otherwise orders. See Section 10002.

As to orders made, or actions taken, before July 1, 1988, and matters pending on July 1, 1988, see Section 9645. As to the application of any amendments made after that date, see Section 3.

Background on Section 10260 of Repealed Code

Section 10260 was added by 1987 Cal. Stat. ch. 923 § 93. The section restated former Probate Code Section 755 (repealed by 1987 Cal. Stat. ch. 923 § 39) as it applied to personal property without substantive change, with the following exceptions:

(1) Subdivision (b) substituted the requirement that the report and petition be "filed" within 30 days after each sale for the requirement of former Section 755 that the report and petition be "made" within 30 days after each sale.

(2) Subdivision (b) gave the purchaser the right to file the report and petition if the personal representative fails to file the report and petition within 30 days after the sale. The former provision required that the report and petition be filed within 30 days but did not state the remedy, if any, the purchaser had if the report and petition were not filed within the 30-day period.

(3) Subdivision (c) required that notice be given at least 15 days before the hearing pursuant to Section 1220 instead of at least 10 days before the hearing as required by former Probate Code Section 1200.5 (repealed by 1987 Cal. Stat. ch. 923 § 59).

For background on the provisions of this part, see the Comment to this part under the part heading.

§ 10261. Hearing on petition for confirmation of sale

Comment. Section 10261 continues Section 10261 of the repealed Probate Code without change. Subdivision (d) is comparable to subdivision (b) of Section 10313 (real property sales). As to when property of the estate may be sold, see Section 10000. For general provisions relating to hearings and orders, see Section 1040-1050.

Unlike the statutes governing the sale of real property (see Sections 10309, 10313), those for sale of personal property do not require that the purchase price of the property be within a specified percentage range of the amount for which the property is appraised by the probate referee.

As to orders made, or actions taken, before July 1, 1988, and matters pending on July 1, 1988, see Section 9645. As to the application of any amendments made after that date, see Section 3.

Background on Section 10261 of Repealed Code

Section 10261 was added by 1987 Cal. Stat. ch. 923 § 93. The first sentence of subdivision (a) was a new provision drawn from a portion of the first sentence of former Probate Code Section 785 (real property) (repealed by 1987 Cal. Stat. ch. 923 § 39). The second sentence of subdivision (a) restated a portion of the second sentence of former Probate Code Section 757 (repealed by 1987 Cal. Stat. ch. 923 § 39) without substantive change.

Subdivision (b) restated the first sentence of former Probate Code Section 756 (repealed by 1987 Cal. Stat. ch. 923 § 39) insofar as it applied to personal property with the addition of the phrase "at or before the hearing."

Subdivision (c) restated the second sentence of former Probate Code Section 774 (repealed by 1987 Cal. Stat. ch. 923 § 39) but provided for examination of the surviving partner if the surviving partner is able to be present at the hearing and is "a resident within the state at the time of the hearing" and included a new provision that made clear that the court may issue a citation to compel the surviving partner to attend the hearing. The court has jurisdiction and discretion to order any surviving partner to appear for examination. Under former Section 774, the provision for examination of the surviving partner applied only where the surviving partner is able to be present at the hearing and is "in the county."

Subdivision (d) was new and was drawn from portions of the second and third sentences of former Section 785 (real property sales) (repealed by 1987 Cal. Stat. ch. 923 § 39).

For background on the provisions of this part, see the Comment to this part under the part heading.

§ 10262. Overbid

Comment. Section 10262 continues Section 10262 of the repealed Probate Code without change. See also Section 10207 (sale to grazing or pasture association permitted irrespective of whether higher bid made at confirmation hearing). Unlike the statutes governing the sale of real property (see Sections 10309, 10313), those for sale of personal property do not require that the purchase price of the property be within a specified percentage range of the amount for which the property is appraised by the probate referee. As to orders made, or actions taken, before July 1, 1988, and matters pending on July 1, 1988, see Section 9645. As to the application of any amendments made after that date, see Section 3.

Background on Section 10262 of Repealed Code

Section 10262 was added by 1987 Cal. Stat. ch. 923 § 93. The section restated former Probate Code Section 756.5 (repealed by 1987 Cal. Stat. ch. 923 § 39) without substantive change, except that Section 10262 permitted an overbid where the original

bid is less than $100 and the overbid is not less than $100 more than the original bid. Former Section 756.5 did not permit an overbid where the original bid was less than $100. Subdivision (b) was a new provision drawn from the second sentence of former Probate Code Section 785 (repealed by 1987 Cal. Stat. ch. 923 § 39). For background on the provisions of this part, see the Comment to this part under the part heading.

§ 10263. Proof that notice of sale was given

Comment. Section 10263 continues Section 10263 of the repealed Probate Code without change. As to proof of giving of notice, see Sections 1260-1265. As to orders made, or actions taken, before July 1, 1988, and matters pending on July 1, 1988, see Section 9645. As to the application of any amendments made after that date, see Section 3.

Background on Section 10263 of Repealed Code

Section 10263 was added by 1987 Cal. Stat. ch. 923 § 93. The section restated the last sentence of former Probate Code Section 756 (repealed by 1987 Cal. Stat. ch. 923 § 39) without substantive change as it applied to personal property. For background on the provisions of this part, see the Comment to this part under the part heading.

§ 10264. Error does not invalidate proceedings

Comment. Section 10264 continues Section 10264 of the repealed Probate Code without change. This section is comparable to Sections 9923 (exchanges), 9948(d) (leases), 9966 (option to purchase real property), 9983 (option to purchase given in will), and 10316 (sale of real property).

If the court lacks jurisdiction, Section 10264 does not cure the defect. See Texas Co. v. Bank of America Nat'l Trust & Sav. Ass'n, 5 Cal. 2d 35, 41-44, 53 P.2d 127 (1935). Section 10264 does not limit the court's authority to set aside an order made through mistake, inadvertence, surprise, or excusable neglect. See Code Civ. Proc. § 473; Estate of Lee, 159 Cal. App. 2d 109, 111-12, 323 P.2d 448 (1958); Estate of Herz, 147 Cal. App. 2d 100, 106-07, 305 P.2d 278 (1956); Estate of McCrae, 133 Cal. App. 2d 634, 637-39, 284 P.2d 914 (1955); Estate of Moreland, 49 Cal. App. 2d 484, 487-88, 121 P.2d 867 (1942).

As to orders made, or actions taken, before July 1, 1988, and matters pending on July 1, 1988, see Section 9645. As to the application of any amendments made after that date, see Section 3.

Background on Section 10264 of Repealed Code

Section 10264 was a new provision added by 1987 Cal. Stat. ch. 923 § 93. For background on the provisions of this part, see the Comment to this part under the part heading.

Article 6. Sale of Real Property

§ 10300. Publication of notice of sale

Comment. Section 10300 continues Section 10300 of the repealed Probate Code without substantive change. For provisions permitting sale

of real property without notice of sale, see Sections 10301 (property appraised at not more than $5,000), 10303 (property authorized or directed by will to be sold). See also Section 9640 (independent administration authority not limited). As to when property of the estate may or must be sold, see Sections 10000, 10001, 10303. As to orders made, or actions taken, before July 1, 1988, and matters pending on July 1, 1988, see Section 9645. As to the application of any amendments made after that date, see Section 3.

Background on Section 10300 of Repealed Code

Section 10300 was added by 1987 Cal. Stat. ch. 923 § 93. The section restated the first sentence of former Probate Code Section 780 (repealed by 1987 Cal. Stat. ch. 923 § 39) without substantive change, except that the requirement that the notice state the "time and place" of sale was continued in Section 10304. For background on the provisions of this part, see the Comment to this part under the part heading.

§ 10301. Notice of sale where property appraised at not more than $5,000

Comment. Section 10301 continues Section 10301 of the repealed Probate Code without substantive change. As to orders made, or actions taken, before July 1, 1988, and matters pending on July 1, 1988, see Section 9645. As to the application of any amendments made after that date, see Section 3.

Background on Section 10301 of Repealed Code

Section 10301 was added by 1987 Cal. Stat. ch. 923 § 93 and was amended by 1988 Cal. Stat. ch. 1199 § 90. The section restated the second sentence of former Probate Code Section 780 (repealed by 1987 Cal. Stat. ch. 923 § 39), except that:

(1) Section 10301 increased the amount from $1,000 to $5,000. The last previous increase in the amount was to $1,000 in 1959. The increase to $5,000 recognized to a limited extent the effect of inflation during the previous 30 years.

(2) The former 10-day period for posting of notice of sale was extended to 15 days under subdivision (b).

The 1988 amendment conformed the terminology used in Section 10301 to the terminology used in other provisions enacted in 1988. For background on the provisions of this part, see the Comment to this part under the part heading.

§ 10302. Shortening time of notice of sale

Comment. Section 10302 continues Section 10302 of the repealed Probate Code without change. As to orders made, or actions taken, before July 1, 1988, and matters pending on July 1, 1988, see Section 9645. As to the application of any amendments made after that date, see Section 3.

Background on Section 10302 of Repealed Code

Section 10302 was added by 1987 Cal. Stat. ch. 923 § 93. The section restated the last portion of the first sentence of former Probate Code Section 782 (repealed by 1987 Cal. Stat. ch. 923 § 39) without substantive change, except that Section 10302 required posting to be for at least five days instead of "one week" as required by former Section

782. The five-day posting period required by Section 10302 was consistent with the posting period required by Section 10251 (shortening time of notice of sale of personal property) which continued the five-day posting period required by former Probate Code Section 772 (repealed by 1987 Cal. Stat. ch. 923 § 39). For background on the provisions of this part, see the Comment to this part under the part heading.

§ 10303. Sale without notice where will directs or authorizes sale

Comment. Section 10303 continues Section 10303 of the repealed Probate Code without change. Under Section 10303, it is not necessary that the will specifically grant the personal representative authority to sell without notice. If the will directs or authorizes the sale, whether or not notice should be given is within the discretion of the personal representative. See Bagley v. City and County of San Francisco, 19 Cal. App. 255, 271, 125 P. 931 (1912). However, a sale of real property made pursuant to a direction or authorization in the will must be confirmed by the court before title to the property passes to the purchaser. See Section 10308. As to orders made, or actions taken, before July 1, 1988, and matters pending on July 1, 1988, see Section 9645. As to the application of any amendments made after that date, see Section 3.

Background on Section 10303 of Repealed Code

Section 10303 was added by 1987 Cal. Stat. ch. 923 § 93. The section restated a portion of the first sentence of former Probate Code Section 757 (repealed by 1987 Cal. Stat. ch. 923 § 39) without substantive change as it applied to real property. For background on the provisions of this part, see the Comment to this part under the part heading.

§ 10304. Contents of notice of sale

Comment. Section 10304 continues Section 10304 of the repealed Probate Code without change. As to orders made, or actions taken, before July 1, 1988, and matters pending on July 1, 1988, see Section 9645. As to the application of any amendments made after that date, see Section 3.

Background on Section 10304 of Repealed Code

Section 10304 was added by 1987 Cal. Stat. ch. 923 § 93. Paragraphs (1) and (2) of subdivision (a) restated a portion of the first sentence of former Probate Code Section 780 and a portion of the first sentence of former Probate Code Section 782 (provisions repealed by 1987 Cal. Stat. ch. 923 § 39) without substantive change. Paragraph (3) of subdivision (a) superseded the third and fourth sentences of former Section 780 (repealed by 1987 Cal. Stat. ch. 923 § 39). Subdivision (b) was new and codified existing practice. For background on the provisions of this part, see the Comment to this part under the part heading.

§ 10305. Sale at public auction

Comment. Section 10305 continues Section 10305 of the repealed Probate Code with the substitution of the requirement that the postponement "is to the advantage of the estate" for the requirement that

the postponement "will serve the interests of all persons concerned." Under subdivision (c), the notice of the postponement is given by public declaration at the time and place specified in the notice of sale unless the auction at that time and place was previously postponed and set for a new date. If the sale is to be again postponed, the notice of the postponement is given by public declaration at the time and place of the new auction as announced in the declaration that postponed the first auction. As to orders made, or actions taken, before July 1, 1988, and matters pending on July 1, 1988, see Section 9645. As to the application of any amendments made after that date, see Section 3.

Background on Section 10305 of Repealed Code

Section 10305 was added by 1987 Cal. Stat. ch. 923 § 93. Subdivisions (a) and (b) restated former Probate Code Section 781 (repealed by 1987 Cal. Stat. ch. 923 § 39) with the following change: Section 10305 required that an auction sale of real property be held between 9:00 a.m. and 9:00 p.m., instead of between 9 a.m. and sunset as formerly required. Subdivision (c) restated former Probate Code Section 783 (repealed by 1987 Cal. Stat. ch. 923 § 39) without substantive change. See also Estate of Hunter, 194 Cal. App. 2d 859, 863-64, 15 Cal. Rptr. 556 (1961) (former Section 783 applied to public auction sales but not to private sales). For background on the provisions of this part, see the Comment to this part under the part heading.

§ 10306. Private sale

Comment. Section 10306 continues Section 10306 of the repealed Probate Code without change. Under subdivision (b), the notice of sale may, for example, require that bids be delivered to the attorney for the personal representative. As to orders made, or actions taken, before July 1, 1988, and matters pending on July 1, 1988, see Section 9645. As to the application of any amendments made after that date, see Section 3.

Background on Section 10306 of Repealed Code

Section 10306 was added by 1987 Cal. Stat. ch. 923 § 93. Subdivision (a) restated a portion of the first sentence of former Probate Code Section 782 (repealed by 1987 Cal. Stat. ch. 923 § 39) without substantive change.

Subdivision (b) restated the last sentence of former Section 782 (repealed by 1987 Cal. Stat. ch. 923 § 39) with the following changes:

(1) The former authority for filing bids with the clerk of the court was not continued.

(2) Subdivision (b) made clear that the notice of sale may indicate the person to whom bids are to be delivered.

For background on the provisions of this part, see the Comment to this part under the part heading.

§ 10307. Bids to comply with notice of sale

Comment. Section 10307 continues Section 10307 of the repealed Probate Code without change. This section is consistent with prior case law. See Estate of Hunter, 194 Cal. App. 2d 859, 865-68, 15 Cal. Rptr. 556 (1961) (real property); cf. In re Estate of Dargie, 33 Cal. App. 2d

148, 155-57, 91 P.2d 126 (1939) (personal property). See also Section 10304 (required and optional contents of notice of sale). As to orders made, or actions taken, before July 1, 1988, and matters pending on July 1, 1988, see Section 9645. As to the application of any amendments made after that date, see Section 3.

Background on Section 10307 of Repealed Code

Section 10307 was a new provision added by 1987 Cal. Stat. ch. 923 § 93. For background on the provisions of this part, see the Comment to this part under the part heading.

§ 10308. Report of sale and petition for confirmation of sale

Comment. Section 10308 continues Section 10308 of the repealed Probate Code without change. The introductory clause of subdivision (a) recognizes that a sale of real property under independent administration authority does not require court confirmation. See Sections 9640, 10503. Subdivision (a) requires confirmation whether the sale is public or private and whether or not made pursuant to a will. For special confirmation provisions, see Sections 10206 (decedent's interest under contract to purchase real property), 10207 (property sold to grazing or pasture association). See also Sections 10150 (liability on contract with agent or broker), 10160-10166 (compensation of agent or broker). For general provisions, see Sections 1000-1004 (rules of practice), 1020-1023 (petitions and other papers), 1040-1050 (hearings and orders), 1200-1230 (notice of hearing), 1250-1252 (request for special notice), 1260-1265 (proof of giving of notice). As to orders made, or actions taken, before July 1, 1988, and matters pending on July 1, 1988, see Section 9645. As to the application of any amendments made after that date, see Section 3.

Background on Section 10308 of Repealed Code

Section 10308 was added by 1987 Cal. Stat. ch. 923 § 93. The section restated former Probate Code Section 755 (repealed by 1987 Cal. Stat. ch. 923 § 39) as it applied to real property without substantive change, with the following exceptions:

(1) Subdivision (b) gave the purchaser the right to file the report of sale and the petition for confirmation of the sale if the personal representative fails to file the report and petition within 30 days after the sale. The former provision required that the report and petition be filed within 30 days but did not state the remedy, if any, the purchaser had if the report and petition were not filed within the 30-day period.

(2) Subdivision (c) required that notice be given at least 15 days before the hearing pursuant to Section 1220 instead of at least 10 days before the hearing as required by former Probate Code Section 1200.5 (repealed by 1987 Cal. Stat. ch. 923 § 59).

The language in subdivision (a) that confirmation is required whether the sale is public or private and whether made pursuant to a will was new, but continued the effect of former Section 755. See 1 H. Miller & M. Starr, Current Law of California Real Estate § 2:49, at 296 (rev. ed. 1975); former Prob. Code § 757 (repealed by 1987 Cal. Stat. ch. 923 § 39).

For background on the provisions of this part, see the Comment to this part under the part heading.

§ 10309. Minimum price for private sale of real property

Comment. Section 10309 continues Section 10309 of the repealed Probate Code without change. All sales of real property must be confirmed by the court, whether the sale is private or at public auction (Section 10308), and all sales must be for a sum not disproportionate to the value of the property (Section 10313(a)(4)). However, the requirement of Section 10309 that the offer be at least 90 percent of the appraised value applies only to private sales; the 90 percent requirement does not apply to sales made at public auction. See also Section 10004 (sale of real and personal property as a unit). For provisions on appointment of probate referees, see Sections 8920-8924. As to orders made, or actions taken, before July 1, 1988, and matters pending on July 1, 1988, see Section 9645. As to the application of any amendments made after that date, see Section 3.

Background on Section 10309 of Repealed Code

Section 10309 was added by 1987 Cal. Stat. ch. 923 § 93. The section restated former Probate Code Section 784 (repealed by 1987 Cal. Stat. ch. 923 § 39) without substantive change, except that (1) Section 10309 required that the appraisal and valuation date used for the appraisal be within one year of the confirmation hearing rather than the date of sale, and (2) subdivision (c) permitted the appointment of a new probate referee if "there is other reason to appoint another probate referee" in place of the provision of former Section 784 that permitted appointment of new probate referee "for just cause." The introductory "except" clause of subdivision (a) continued one effect of the "notwithstanding" clause of subdivision (b) of former Probate Code Section 794 (repealed by 1987 Cal. Stat. ch. 923 § 39).

Paragraph (2) of subdivision (a) referred to the "valuation date" of the appraisal. This was consistent with the intent of former Section 784, pursuant to which an appraisement was deemed to relate back to the valuation date. See 1 A. Marshall, California Probate Procedure § 1403, at 14-200 (4th ed. rev. 1984). For background on the provisions of this part, see the Comment to this part under the part heading.

§ 10310. Hearing on petition for confirmation of sale

Comment. Section 10310 continues Section 10310 of the repealed Probate Code without change. For general provisions relating to hearings and orders, see Section 1040-1050. As to orders made, or actions taken, before July 1, 1988, and matters pending on July 1, 1988, see Section 9645. As to the application of any amendments made after that date, see Section 3.

Background on Section 10310 of Repealed Code

Section 10310 was added by 1987 Cal. Stat. ch. 923 § 93. The first sentence of subdivision (a) restated a portion of the first sentence of former Probate Code Section 785 (repealed by 1987 Cal. Stat. ch. 923 § 39) without substantive change. The second sentence of subdivision (a) restated a portion of the second sentence of former Probate Code Section 757 (repealed by 1987 Cal. Stat. ch. 923 § 39) without substantive change.

The phrase "advantage of the estate and the benefit to the interested persons" was substituted in subdivision (a) of Section 10310 for the phrase "advantage, benefit and interest of the estate" used in former Section 785. This substitution made no substantive change in the provision and made the provision consistent with subdivision (b) of Section 10000.

Subdivision (b) restated a portion of the first sentence of former Section 785 with the substitution of the phrase "to obtain the highest and best price for the property reasonably attainable" for the former language "to expose the property to the market, and must examine the return and witnesses in relation to the sale."

Subdivision (c) restated the first sentence of former Probate Code Section 756 (repealed by 1987 Cal. Stat. ch. 923 § 39) insofar as it applied to real property with the addition of the phrase "at or before the hearing."

For background on the provisions of this part, see the Comment to this part under the part heading.

§ 10311. Overbid

Comment. Section 10311 continues Section 10311 of the repealed Probate Code without change. If the court orders a new sale under subdivision (c), notice of the new sale shall be given and the new sale shall be conducted as if no previous sale had taken place. See Section 10313(d). See also Sections 10162 (limitation on compensation of agent or broker producing successful overbidder), 10166 (effect of condition in bid that certain amount of bid be paid to agent or broker). As to compensation of agents and brokers generally, see Sections 10160-10167.

As under prior law, the overbid procedure applies both to private sales and to public auction sales. See 1 H. Miller & M. Starr, Current Law of California Real Estate § 2:63, at 735-36 (2d ed. 1989).

As to orders made, or actions taken, before July 1, 1988, and matters pending on July 1, 1988, see Section 9645. As to the application of any amendments made after that date, see Section 3.

Background on Section 10311 of Repealed Code

Section 10311 was added by 1987 Cal. Stat. ch. 923 § 93. Subdivision (a) restated a portion of the second sentence of former Probate Code Section 785 (repealed by 1987 Cal. Stat. ch. 923 § 39) without substantive change. The reference to Section 10207 in the introductory clause of subdivision (a) continued one effect of the "notwithstanding" clause of subdivision (b) of former Probate Code Section 794 (repealed by 1987 Cal. Stat. ch. 923 § 39). Subdivision (b) restated a portion of the third sentence of former Section 785 without substantive change. Subdivision (c) restated portions of the second and third sentences of former Section 785 without substantive change. Subdivision (d) restated former Probate Code Section 785.1 (repealed by 1987 Cal. Stat. ch. 923 § 39) and the last sentence of former Section 785 without substantive change. Subdivision (e) restated the fifth sentence and a portion of the sixth sentence of former Section 785 without substantive change. For background on the provisions of this part, see the Comment to this part under the part heading.

§ 10312. Proof that notice of sale was given

Comment. Section 10312 continues Section 10312 of the repealed Probate Code without change. As to when notice of sale is required, see Sections 10300-10303. As to proof of giving of notice, see Sections 1260-1265. As to orders made, or actions taken, before July 1, 1988, and matters pending on July 1, 1988, see Section 9645. As to the application of any amendments made after that date, see Section 3. For a comparable provision, see Section 10263 (personal property).

Background on Section 10312 of Repealed Code

Section 10312 was added by 1987 Cal. Stat. ch. 923 § 93. The section restated the last sentence of former Probate Code Section 756 (repealed by 1987 Cal. Stat. ch. 923 § 39) without substantive change as it applied to real property. For background on the provisions of this part, see the Comment to this part under the part heading.

§ 10313. Order confirming or vacating sale

Comment. Section 10313 continues Section 10313 of the repealed Probate Code without change. Paragraph (1) of subdivision (a) recognizes that it is not necessary to show that good reason existed for the sale if the sale was authorized or directed by the decedent's will. Paragraph (5) of subdivision (a) recognizes that the 90 percent requirement of Section 10309 applies only to private sales, and not to public auction sales. See also Sections 10150 (contract with agent or broker), 10160-10166 (compensation of agent or broker). As to orders made, or actions taken, before July 1, 1988, and matters pending on July 1, 1988, see Section 9645. As to the application of any amendments made after that date, see Section 3.

Background on Section 10313 of Repealed Code

Section 10313 was added by 1987 Cal. Stat. ch. 923 § 93. Subdivision (a) restated portions of the first, second, and third sentences of former Probate Code Section 785 (repealed by 1987 Cal. Stat. ch. 923 § 39) without substantive change. Paragraph (1) of subdivision (a) recognized that it is not necessary to show that good reason existed for the sale if the sale was authorized or directed by the decedent's will. This continued the last portion of the second sentence of former Probate Code Section 757 (repealed by 1987 Cal. Stat. ch. 923 § 39) as it applied to real property. Paragraph (5) of subdivision (a) recognized that the 90 percent requirement of Section 10309 applies only to private sales and not to public auction sales. This continued a portion of the first sentence of former Probate Code Section 784 (repealed by 1987 Cal. Stat. ch. 923 § 39). See 1 A. Marshall, California Probate Procedure § 1407, at 14-204 (4th ed. rev. 1984); 1 H. Miller & M. Starr, Current Law of California Real Estate § 2:49, at 296 n.19 (rev. ed. 1975).

Subdivision (b) restated portions of the second and third sentences of former Section 785 (without substantive change. Subdivisions (c) and (d) continued the last portion of the first sentence of former Section 785 without substantive change.

For background on the provisions of this part, see the Comment to this part under the part heading.

§ 10314. Conveyance or assignment after confirmation

Comment. Section 10314 continues Section 10314 of the repealed Probate Code without substantive change. As to the effect of court authorization or approval, see Section 7250. See also Sections 7260-7263 (orders and transactions affecting property). As to orders made, or actions taken, before July 1, 1988, and matters pending on July 1, 1988, see Section 9645. As to the application of any amendments made after that date, see Section 3.

Background on Section 10314 of Repealed Code

Section 10314 was added by 1987 Cal. Stat. ch. 923 § 93. Subdivision (a) restated the first sentence of former Probate Code Section 786 (repealed by 1987 Cal. Stat. ch. 923 § 39) without substantive change. Subdivision (b) restated the first portion of former Probate Code Section 802 (repealed by 1987 Cal. Stat. ch. 923 § 39). Subdivision (c) restated the second sentence of former Section 786 without substantive change. Subdivision (d) restated the last portion of former Section 802 without substantive change. For background on the provisions of this part, see the Comment to this part under the part heading.

§ 10315. Sale on credit

Comment. Section 10315 continues Section 10315 of the repealed Probate Code without change. As to orders made, or actions taken, before July 1, 1988, and matters pending on July 1, 1988, see Section 9645. As to the application of any amendments made after that date, see Section 3.

Background on Section 10315 of Repealed Code

Section 10315 was added by 1987 Cal. Stat. ch. 923 § 93. The section restated former Probate Code Section 787 (repealed by 1987 Cal. Stat. ch. 923 § 39) without substantive change as it applied to real property. For background on the provisions of this part, see the Comment to this part under the part heading.

§ 10316. Error does not invalidate proceedings

Comment. Section 10316 continues Section 10316 of the repealed Probate Code without change. This section is comparable to Sections 9923 (exchanges), 9948(d) (leases), 9966 (option to purchase real property), 9983 (option to purchase given in will), and 10264 (sale of personal property).

If the court lacks jurisdiction, Section 10316 does not cure the defect. See Texas Co. v. Bank of America Nat'l Trust & Sav. Ass'n, 5 Cal. 2d 35, 41-44, 53 P.2d 127 (1935). Section 10316 does not limit the court's authority to set aside an order made through mistake, inadvertence, surprise, or excusable neglect. See Code Civ. Proc. § 473; Estate of Lee, 159 Cal. App. 2d 109, 111-12, 323 P.2d 448 (1958); Estate of Herz, 147 Cal. App. 2d 100, 106-07, 305 P.2d 278 (1956); Estate of McCrae, 133 Cal. App. 2d 634, 637-39, 284 P.2d 914 (1955); Estate of Moreland, 49 Cal. App. 2d 484, 487-88, 121 P.2d 867 (1942).

As to orders made, or actions taken, before July 1, 1988, and matters pending on July 1, 1988, see Section 9645. As to the application of any amendments made after that date, see Section 3.

Background on Section 10316 of Repealed Code

Section 10316 was a new provision added by 1987 Cal. Stat. ch. 923 § 93. For background on the provisions of this part, see the Comment to this part under the part heading.

Article 7. Vacating Sale for Purchaser's Default; Liability of Defaulting Purchaser for Damages

§ 10350. Order vacating sale and directing resale; liability of defaulting purchaser

Comment. Section 10350 continues Section 10350 of the repealed Probate Code without change. For general provisions, see Sections 1000-1004 (rules of practice), 1020-1023 (petitions and other papers), 1040-1050 (hearings and orders), 1200-1230 (notice of hearing), 1250-1252 (request for special notice), 1260-1265 (proof of giving of notice).

Under paragraph (1) of subdivision (e), the estate's loss of bargain is measured by the contract price for the first sale less the price obtained on the second sale. This differs from damages for defaults generally in that, under the general rule, the resale price is merely some evidence of value. See 1 B. Witkin, Summary of California Law *Contracts* § 847, at 763-64 (9th ed. 1987).

Under paragraph (2) of subdivision (e), the recoverable expenses of sale are those made necessary by the purchaser's breach, the same as under general law. Estate of Williamson, 150 Cal. App. 2d 334, 339, 310 P.2d 77 (1957). Such expenses may include expenses of resale to the extent they exceed the expenses assumed by the estate under the breached contract. Jensen v. Dalton, 9 Cal. App. 3d 654, 657-58, 88 Cal. Rptr. 426 (1970).

Under paragraph (3) of subdivision (e), consequential damages are recoverable as under general law. See also 1 B. Witkin, supra, §§ 848-49, at 764-66. In the case of real property, such consequential damages may include sewer assessments, taxes, and fees for utilities (Jensen v. Dalton, 9 Cal. App. 3d at 658), and insurance, security, storage, and pool and gardening expenses.

As to orders made, or actions taken, before July 1, 1988, and matters pending on July 1, 1988, see Section 9645. As to the application of any amendments made after that date, see Section 3.

Background on Section 10350 of Repealed Code

Section 10350 was added by 1987 Cal. Stat. ch. 923 § 93. Subdivisions (a) and (b) restated the first sentence of former Probate Code Section 775 and the first sentence of former Probate Code Section 788 (provisions repealed by 1987 Cal. Stat. ch. 923 § 39)

without substantive change except that the provision in subdivision (b) that notice need not be given to a defaulting purchaser who has filed a written consent was new and was drawn from former Probate Code Sections 776 and 789 (provisions repealed by 1987 Cal. Stat. ch. 923 § 39).

Subdivision (c) restated the substance of a portion of the second sentence of former Section 788 (resale of real property) and superseded the third sentence and a portion of the second sentence of former Section 775 (resale of personal property) (provisions repealed by 1987 Cal. Stat. ch. 923 § 39).

Subdivision (d) restated a portion of the second sentence of former Section 775 and a portion of the second sentence of former Section 788 without substantive change (provisions repealed by 1987 Cal. Stat. ch. 923 § 39).

Subdivision (e) superseded the last sentence of former Section 775 and the last sentence of former Section 788 (provisions repealed by 1987 Cal. Stat. ch. 923 § 39). Paragraph (1) of subdivision (e) continued prior law. Under former Sections 775 and 788, if the amount realized on resale did not cover the bid and expenses of the first (incomplete) sale, the defaulting purchaser was liable for the "deficiency." See also Estate of Williamson, 150 Cal. App. 2d 334, 339, 310 P.2d 77 (1957). Under paragraph (1) of subdivision (e), as under former Sections 775 and 788, the estate's loss of bargain is measured by the contract price for the first sale less the price obtained on the second sale. Paragraph (2) of subdivision (e) changed prior law. Under former Sections 775 and 788, if there was a resale of the property, recoverable expenses were those of the first (incomplete) sale, not those of the resale. Estate of Williamson, 150 Cal. App. 2d 334, 339, 310 P.2d 77 (1957). Under paragraph (2), the recoverable expenses of sale were those made necessary by the purchaser's breach, the same as under general law. Id. at 339. Paragraph (3) of subdivision (e) was new.

For background on the provisions of this part, see the Comment to this part under the part heading.

§ 10351. Order vacating sale and confirming sale to new high bidder

Comment. Section 10351 continues Section 10351 of the repealed Probate Code without change. The 60-day period allowed for filing the petition does not require that the personal representative delay until the 60 days have expired before petitioning the court for an order directing the resale of the property. See Section 10350. For general provisions, see Sections 1000-1004 (rules of practice), 1020-1023 (petitions and other papers), 1040-1050 (hearings and orders), 1200-1230 (notice of hearing), 1250-1252 (request for special notice), 1260-1265 (proof of giving of notice). As to orders made, or actions taken, before July 1, 1988, and matters pending on July 1, 1988, see Section 9645. As to the application of any amendments made after that date, see Section 3.

Background on Section 10351 of Repealed Code

Section 10351 was added by 1987 Cal. Stat. ch. 923 § 93. The section restated former Probate Code Sections 776 and 789 (provisions repealed by 1987 Cal. Stat. ch. 923 § 39) without substantive change, except that Section 10351 increased the 45-day period provided in the former sections to 60 days. For background on the provisions of this part, see the Comment to this part under the part heading.

Article 8. Application of Sale Proceeds of Encumbered Property; Sale to Lienholder

§ 10360. Definitions

Comment. Section 10360 continues Section 10360 of the repealed Probate Code without change. As to orders made, or actions taken, before July 1, 1988, and matters pending on July 1, 1988, see Section 9645. As to the application of any amendments made after that date, see Section 3.

Background on Section 10360 of Repealed Code

Section 10360 was a new provision added by 1987 Cal. Stat. ch. 923 § 93. For background on the provisions of this part, see the Comment to this part under the part heading.

§ 10361. Application of purchase money on sale of encumbered property

Comment. Section 10361 continues Section 10361 of the repealed Probate Code without substantive change. This section requires that the lien be paid and satisfied only if required under the terms of the sale. This permits the property to be sold subject to the lien, a term of sale that might be beneficial to the estate if the terms of the existing financing are better than can be obtained at the time of the sale. If the expenses of sale are unreasonable in amount, the personal representative is liable for the excess amount. See Sections 9600-9603. As to orders made, or actions taken, before July 1, 1988, and matters pending on July 1, 1988, see Section 9645. As to the application of any amendments made after that date, see Section 3.

Background on Section 10361 of Repealed Code

Section 10361 was added by 1987 Cal. Stat. ch. 923 § 93. The section restated former Probate Code Section 762 (repealed by 1987 Cal. Stat. ch. 923 § 39) with the following changes:

(1) Section 10361 required that the amount secured by the lien on the property sold be paid and satisfied (if required under the terms of the sale) before payment of the expenses of the sale. Former Section 762 required that the necessary expenses of the sale be paid before the lien on the property sold was paid and satisfied, and did not specifically permit sale of the property subject to the lien.

(2) Section 10361 provided that the purchase money be used to pay the expenses of sale. Former Section 762 required that the "necessary" expenses of the sale be paid.

For background on the provisions of this part, see the Comment to this part under the part heading.

§ 10362. Payment to clerk of court

Comment. Section 10362 continues Section 10362 of the repealed Probate Code without change. As to orders made, or actions taken, before July 1, 1988, and matters pending on July 1, 1988, see Section

9645. As to the application of any amendments made after that date, see Section 3.

Background on Section 10362 of Repealed Code

Section 10362 was added by 1987 Cal. Stat. ch. 923 § 93. The section restated former Probate Code Section 763 (repealed by 1987 Cal. Stat. ch. 923 § 39) without substantive change. For background on the provisions of this part, see the Comment to this part under the part heading.

§ 10363. Sale to lienholder

Comment. Section 10363 continues Section 10363 of the repealed Probate Code without change. As to orders made, or actions taken, before July 1, 1988, and matters pending on July 1, 1988, see Section 9645. As to the application of any amendments made after that date, see Section 3.

Background on Section 10363 of Repealed Code

Section 10363 was added by 1987 Cal. Stat. ch. 923 § 93. The section restated former Probate Code Section 764 (repealed by 1987 Cal. Stat. ch. 923 § 39) without substantive change except for revisions necessary to reflect the new authorization under Section 10361 to sell property subject to the lien on the property. For background on the provisions of this part, see the Comment to this part under the part heading.

Article 9. Damages and Recovery of Property

§ 10380. Damages for neglect or misconduct of personal representative

Comment. Section 10380 continues Section 10380 of the repealed Probate Code without change. When the personal representative is liable, the liability may be enforced against the bond of the personal representative or by other means of enforcement of a judgment. See Sections 8480, 8487; Code Civ. Proc § 996.410. See also Guggenhime & Wald, *Bonds and Protection of Assets,* in 1 California Decedent Estate Practice § 8.28 (Cal. Cont. Ed. Bar rev. 1989). But see the Comment to Section 10381 (liquidated damages for fraudulent sale of real property). As to orders made, or actions taken, before July 1, 1988, and matters pending on July 1, 1988, see Section 9645. As to the application of any amendments made after that date, see Section 3.

Background on Section 10380 of Repealed Code

Section 10380 was added by 1987 Cal. Stat. ch. 923 § 93. The section restated former Probate Code Section 759 (repealed by 1987 Cal. Stat. ch. 923 § 39) without substantive change. The language that "[t] he personal representative is liable to an interested person" replaced the former language that "the party aggrieved may recover the damage by enforcing the liability upon the bond of the executor or administrator, or otherwise." This change was nonsubstantive. For background on the provisions of this part, see the Comment to this part under the part heading.

§ 10381. Liquidated damages for fraudulent sale of real property

Comment. Section 10381 continues Section 10381 of the repealed Probate Code without change. See also Sections 9601-9603 (measure of liability for breach of fiduciary duty), 10380 (damages for neglect or misconduct of personal representative); Civil Code §§ 761-783.1 (estates in real property). Although the person may recover liquidated damages from the personal representative under Section 10381, the surety on the personal representative's bond is liable only for the damages under Section 10380 up to the limits on the bond. See Weihe v. Statham, 67 Cal. 245, 7 P. 673 (1885). See also Section 10380. As to orders made, or actions taken, before July 1, 1988, and matters pending on July 1, 1988, see Section 9645. As to the application of any amendments made after that date, see Section 3.

Background on Section 10381 of Repealed Code

Section 10381 was added by 1987 Cal. Stat. ch. 923 § 93. The section restated former Probate Code Section 792 (repealed by 1987 Cal. Stat. ch. 923 § 39) without substantive change except (1) the damages were made double the value of the "real property" sold rather than double the value of the "land" sold and language was added to make clear that the damages are to be computed using the value of the property on the date it was sold and (2) Section 10381 made clear that the liquidated damages provided for in the section are in addition to any other recoverable damages. For background on the provisions of this part, see the Comment to this part under the part heading.

§ 10382. Statute of limitation for action for recovery of property

Comment. Section 10382 continues Section 10382 of the repealed Probate Code without change. As to orders made, or actions taken, before July 1, 1988, and matters pending on July 1, 1988, see Section 9645. As to the application of any amendments made after that date, see Section 3.

Background on Section 10382 of Repealed Code

Section 10382 was added by 1987 Cal. Stat. ch. 923 § 93. Subdivision (a) continued the first sentence of former Probate Code Section 793 (repealed by 1987 Cal. Stat. ch. 923 § 39) without substantive change. Subdivision (b) replaced the second sentence of former Section 793 which provided for tolling of the limitation for minors and others under legal disability. For background on the provisions of this part, see the Comment to this part under the part heading.

PART 6. INDEPENDENT ADMINISTRATION OF ESTATES

Comment. This part supersedes Part 6 (commencing with Section 10400) of Division 7 of the repealed Probate Code. The superseded part was enacted upon recommendation of the California Law Revision Commission. See *Recommendation Relating to Independent Administration of Estates Act,* 19 Cal. L. Revision Comm'n Reports 205

(1988); *Communication from California Law Revision Commission Concerning Assembly Bill 708,* 19 Cal. L. Revision Comm'n Reports 545, 583-611 (1988). See also *Recommendation Relating to Independent Administration of Decedent's Estate,* 17 Cal. L. Revision Comm'n Reports 405 (1984); *Communication Concerning Assembly Bill 196,* 18 Cal. L. Revision Comm'n Reports 367, 370-73 (1986).

CHAPTER 1. GENERAL PROVISIONS

§ 10400. Citation of this part

Comment. Section 10400 continues Section 10400 of the repealed Probate Code without change.

Background on Section 10400 of Repealed Code

Section 10400 was added by 1987 Cal. Stat. ch. 923 § 93. The section restated former Probate Code Section 591 (repealed by 1987 Cal. Stat. ch. 923 § 35) without substantive change. For background on the provisions of this part, see the Comment to this part under the part heading.

§ 10401. "Court supervision" defined

Comment. Section 10401 continues Section 10401 of the repealed Probate Code without change. See also Section 10503 (requirements applicable to court confirmation of sales of real property do not apply to sales under independent administration). As to the order, authorization, approval, confirmation, or instructions required for estate management transactions when the personal representative has not been granted independent administration authority, see generally Part 5 (commencing with Section 9600) of Division 7.

Background on Section 10401 of Repealed Code

Section 10401 was added by 1987 Cal. Stat. ch. 923 § 93. The section restated a portion of the second sentence of subdivision (a) of former Probate Code Section 591.2 (repealed by 1987 Cal. Stat. ch. 923 § 35) without substantive change. For background on the provisions of this part, see the Comment to this part under the part heading.

§ 10402. "Full authority" defined

Comment. Section 10402 continues Section 10402 of the repealed Probate Code without change. As to the exercise of powers under this part, see generally Section 10502 and the Comment thereto.

Background on Section 10402 of Repealed Code

Section 10402 was a new provision added by 1987 Cal. Stat. ch. 923 § 93. Sections 10402 and 10403 were new definitions that recognized the use in former practice of the terms "full authority" and "limited authority" to describe the powers of a personal representative who has obtained independent administration authority. For background on the provisions of this part, see the Comment to this part under the part heading.

§ 10403. "Limited authority" defined

Comment. Section 10403 continues Section 10403 of the repealed Probate Code without change. As to the exercise of powers under this

part, see generally Section 10502 and the Comment thereto. In connection with subdivision (d), see Sections 10450(b)(2), 10452, 10501(b). See also the Comment to Section 10501. If the personal representative was granted independent administration authority prior to July 1, 1988, the personal representative may use that existing authority on and after July 1, 1988, to borrow money on a loan secured by an encumbrance upon real property, whether or not that existing authority includes authority to sell real property. See Section 10406(b). As to the reason why the personal representative may request only limited authority, see the Comment to Section 10450.

Background on Section 10403 of Repealed Code

Section 10403 was a new provision added by 1987 Cal. Stat. ch. 923 § 93. Sections 10402 and 10403 were new definitions that recognized the use in former practice of the terms "full authority" and "limited authority" to describe the powers of a personal representative who has obtained independent administration authority.

Section 10403 was consistent with subdivision (b)(2) of former Probate Code Section 591.1 (repealed by 1987 Cal. Stat. ch. 923 § 35), except for the addition of subdivision (d) of Section 10403 which was a new limitation on the powers of a personal representative who has only limited authority. Subdivision (d) was consistent with the portion of subdivision (b) of Probate Code Section 10501 which required court supervision if the personal representative has limited authority and proposes to borrow money with the loan secured by an encumbrance upon real property of the estate.

For background on the provisions of this part, see the Comment to this part under the part heading.

§ 10404. This part not applicable if will so provides

Comment. Section 10404 continues Section 10404 of the repealed Probate Code without change. For purposes of Section 10404, a provision in the decedent's will that the estate shall not be administered under former Article 2 of Chapter 8 of Division 3 of the repealed Probate Code (former Probate Code Sections 591-591.9, repealed by 1987 Cal. Stat. ch. 923 § 35), or under the Independent Administration of Estates Act, is a provision that the estate shall not be administered under this part. See also Section 10502(b) (decedent's will may restrict powers exercisable under independent administration authority). As to the application of this part where independent administration authority was granted under the repealed Probate Code, see Section 10406.

Background on Section 10404 of Repealed Code

Section 10404 was added by 1987 Cal. Stat. ch. 923 § 93. Section 10404 restated the second sentence of subdivision (a) of former Probate Code Section 591.1 (repealed by 1987 Cal. Stat. ch. 923 § 35) without substantive change. For background on the provisions of this part, see the Comment to this part under the part heading.

§ 10404.5. Hiring and paying attorney and others authorized whether or not independent administration authority granted

Comment. Section 10404.5 continues Section 10404.5 of the repealed Probate Code without change. This section does not apply in a proceeding commenced before January 1, 1991. See Section 10406(c). As to the application of any amendments made after that date, see Section 3.

Section 10404.5 permits the notice of proposed action procedure to be used with respect to the hiring and compensation of persons hired under Section 10565, even though the personal representative has not been granted authority to administer the estate under this part. This section avoids the need to petition for authority to administer the estate under this part, or to obtain such authority, in order to use the procedure under this part for the exercise of the power granted by Section 10565.

Section 10550 permits the exercise of the power granted by Section 10565 without giving notice of proposed action under Chapter 4 (commencing with Section 10580). However, subdivision (b) of Section 10580 permits a personal representative to use the notice of proposed action procedure provided in Chapter 4 with respect to the exercise of that power even though the action is not one for which notice of proposed action is required. If the procedure provided by Chapter 4 is used with respect to the proposed exercise of the power granted by Section 10565, a person who fails to object to the proposed action waives the right to have the court later review the action taken. See Section 10590 and the Comment to that section. See also Section 10589(b) and the Comment to that section. Use of the notice of proposed action procedure avoids the need to petition the court under Section 9684 for approval of the hiring and the contract in order to preclude a later challenge to the accounts of the personal representative. See also Section 10585.5 (estimated amount of compensation to be included in notice of proposed action; copy of contract governing hiring and compensation to be provided with notice of proposed action).

Background on Section 10404.5 of Repealed Code

Section 10404.5 was a new section added by 1990 Cal. Stat. [AB 831]. For background on the provisions relating to hiring and paying attorneys and others, see *Recommendations Relating to Probate Law: Hiring and Paying Attorneys, Advisors, and Others; Compensation of Personal Representative*, 20 Cal. L. Revision Comm'n Reports 31 (1990).

§ 10405. Special administrator

Comment. Section 10405 continues Section 10405 of the repealed Probate Code without change. This section permits independent

administration authority to be granted to a special administrator if the special administrator is appointed with, or has been granted, the powers of a general administrator. See Section 8545. This authority is useful, for example, in an estate with a lengthy will contest where virtually all of the administration is handled by the special administrator, and the only act which occurs after the final resolution of the will contest is the distribution of the estate assets. In such a case, the special administrator may obtain independent administration authority unless good cause is shown why the authority should not be granted.

An applicant for letters of special administration with powers of a general administrator can obtain independent administration authority only as provided in Sections 10450-10453. The applicant must petition for the authority as provided in Section 10450; notice of the hearing must be given in compliance with the requirements of Section 10451; and the provisions of Sections 10452 and 10453 are applicable.

If there is an urgent need for appointment of a special administrator, the petition for independent administration authority can be filed under Chapter 2 (commencing with Section 10450) after the special administrator has been appointed. Using this procedure will permit the special administrator to be appointed without delay and yet permit compliance with the notice of hearing requirements of Section 10451 for the hearing on the petition for independent administration authority.

If the special administrator is not granted the powers of a general administrator at the time of appointment but is later granted the powers of a general administrator, the special administrator may be granted authority to administer the estate under this part at the same time the special administrator is granted the powers of a general administrator or at any time after the personal representative has been granted the powers of a general administrator.

As to the application of this part where independent administration authority was granted under the repealed Probate Code, see Section 10406.

Background on Section 10405 of Repealed Code

Section 10405 was added by 1987 Cal. Stat. ch. 923 § 93 and was amended by 1988 Cal. Stat. ch. 1199 § 90.5. Section 10405 replaced the third sentence of subdivision (a) of former Probate Code Section 591.1 (repealed by 1987 Cal. Stat. ch. 923 § 35). That sentence provided that the independent administration provisions did not apply to special administrators. The 1988 amendment conformed Section 10405 to the terminology used in other provisions enacted or revised in 1988. For background on the provisions of this part, see the Comment to this part under the part heading.

§ 10406. Application of part where independent administration authority granted under repealed Probate Code

Comment. Section 10406 continues Section 10406 of the repealed Probate Code with the changes described below.

Subdivision (a) supersedes subdivisions (a) and (b) of Section 10406 of the repealed Probate Code. Under the superseded provisions, a personal representative who was granted authority prior to January 1, 1985, to administer the estate under the Independent Administration of Estates Act was governed by the provisions of the Independent Administration of Estates Act that were applicable at the time the petition requesting independent administration authority was granted. But the superseded provisions included an exception that allowed a personal representative who was granted independent administration authority prior to January 1, 1985, to exercise the authority granted by this part of the repealed Probate Code where a petition was filed after that date requesting authority to administer the estate under the independent administration statute in effect at the time the petition was filed and the petition was granted. Subdivision (a) Section 10406 abandons this now obsolete scheme and simplifies the law by providing that—subject to subdivisions (b) and (c)—this part applies to all proceedings where independent administration authority has been granted, whether under the new Probate Code, under the provisions of the repealed Probate Code, or under the provisions of the Probate Code in effect prior to January 1, 1985. As to the application of any amendments made after that date, see Section 3.

Subdivision (b) continues subdivision (c) of Section 10405 of the repealed Probate Code without change. Subdivision (b) preserves the authority of a personal representative prior to July 1, 1988, to borrow money secured by real property where the personal representative was granted authority that did not include the authority to sell, exchange, or grant an option to purchase real property. Under the law in effect prior to July 1, 1988, such a personal representative had authority to borrow money with the loan secured by an encumbrance upon real property of the estate. This part of the repealed Probate Code (which became operative on July 1, 1988) added an additional limitation on the authority of a personal representative whose authority does not include authority to sell, exchange, or grant an option to purchase real property; such a personal representative does not have authority to borrow money with the loan secured by an encumbrance upon real property of the estate. See Section 10403 (defining "limited authority") and the Comment to that section; see also Section 10501(b) and the Comment to that section.

Subdivision (b) of Section 10406 makes clear that this additional limitation does not apply to a personal representative who was granted independent administration authority prior to July 1, 1988. Such a personal representative may borrow money on or after July 1, 1988, on a loan secured by real property of the estate, notwithstanding that the personal representative does not have authority to sell real property of the estate.

Subdivision (c) continues subdivision (d) of Section 10406 of the repealed Probate Code without substantive change. This subdivision precludes the use of independent administration for attorney's fees in proceedings commenced before January 1, 1991. The allowance of attorney fees in a proceeding commenced before January 1, 1991, is governed by the applicable law in effect before January 1, 1991. See former Prob. Code §§ 900-911 (repealed by 1990 Cal. Stat. [AB 831]) (commission of personal representative and fees of estate attorney).

Background on Section 10406 of Repealed Code

Section 10406 was a new provision added by 1987 Cal. Stat. ch. 923 § 93 and amended by 1990 Cal. Stat. [AB 831] to add subdivision (d). For background on the provisions of this part, see the Comment to this part under the part heading. See also *Recommendations Relating to Probate Law: Hiring and Paying Attorneys, Advisors, and Others; Compensation of Personal Representative*, 20 Cal. L. Revision Comm'n Reports 31 (1990) and *Communication from the California Law Revision Commission Concerning Assembly Bill 831*, 20 Cal. L. Revision Comm'n Reports ___ (1990).

CHAPTER 2. GRANTING OR REVOKING INDEPENDENT ADMINISTRATION AUTHORITY

§ 10450. Petition for order granting independent administration authority

Comment. Section 10450 continues Section 10450 of the repealed Probate Code without change. Subdivision (b) permits the petitioner either (1) to request full authority (this authority permits the personal representative to administer the estate using all of the powers granted by this part) or (2) to request limited authority. Limited authority permits the personal representative to exercise all of the powers granted by this part except the power to sell, exchange, or grant an option to purchase real property or to borrow money with the loan secured by an encumbrance upon real property. See Sections 10402 (defining "full authority"), 10403 (defining "limited authority"). See also Sections 8405 (notation on letters), 10501(b) (matters requiring court supervision). For example, the personal representative granted limited authority cannot use the independent administration procedure to sell or exchange real property, but the personal representative is authorized to use independent

administration authority to sell listed and certain over the counter securities without giving notice of proposed action (see paragraphs (1) and (2) of subdivision (b) of Section 10537) and to invest in certain securities using the notice of proposed action procedure (see subdivision (c) of Section 10533).

If a bond is required and the bond is given by a corporate surety, the amount of the bond of the personal representative who is granted full authority is fixed by the court at not more than the estimated value of the personal property, the estimated value of the decedent's interest in the real property authorized to be sold under this part, and the probable annual gross income of the estate; if the bond is given by personal sureties, the amount is fixed at not less than twice that amount. See Section 10453(a). The estimated value of the decedent's interest in the real property authorized to be sold under this part is excluded in determining the amount of the required bond if the personal representative has only limited authority. See Section 10453(b). Thus, in some cases, a significant saving in the bond premium can be realized by seeking only limited authority. Because of this consideration, limited authority ordinarily is sought only where a bond is required and the personal representative seeks to avoid the increased bond premium that is required when full authority is granted. Accordingly, a personal representative who is not required to provide a bond almost always will request full authority; and a personal representative who is required to provide a bond for an estate that includes real property ordinarily will request limited authority unless the personal representative wishes to use independent administration authority for a sale of some or all of the real property or to borrow money secured by the real property.

The personal representative, despite the grant of independent administration authority, may seek court supervision of a particular transaction. See Section 10500(b). Hence, for example, even though the personal representative has been granted full authority (independent administration authority that encompasses real property transactions), the personal representative may decide to sell real property under the supervised administration procedures (using the statutory procedure that governs a real property sale when independent administration authority has not been granted). See the Comment to Section 10500. Likewise, the personal representative may decide to seek court approval or instructions concerning a transaction rather than to use independent administration authority in a case where there is a lack of agreement as to the desirability of the transaction among the persons interested in the estate or where some of the heirs or devisees who would receive notice of

proposed action lack the capacity to object to the proposed action (see subdivision (c) of Section 10590) or for some other reason.

Authority to administer the estate under this part may not be granted where the decedent's will provides that the estate shall not be administered under this part. See Section 10404. Likewise, the authority of the personal representative to exercise particular powers under the Independent Administration of Estates Act may be restricted by the decedent's will. See Section 10502. A special administrator may be granted independent administration authority only if the special administrator is appointed with or has been granted the powers of a general administrator. See Section 10405 and the Comment thereto.

As to the application of this part where independent administration authority was granted under the repealed Probate Code, see Section 10406.

Background on Section 10450 of Repealed Code

Section 10450 was added by 1987 Cal. Stat. ch. 923 § 93. Subdivision (a) restated the first sentence of subdivision (a) of former Probate Code Section 591.1 (repealed by 1987 Cal. Stat. ch. 923 § 35) without substantive change. Subdivision (b) restated subdivision (b) of former Section 591.1 without substantive change, except that subdivision (b) of Section 10450 uses the defined terms "full authority" and "limited authority." See Sections 10402 (defining "full authority"), 10403 (defining "limited authority"). See also Sections 1020-1023 (petitions and other papers), 8405 (endorsement on letters), 10501(b) (matters requiring court supervision). For background on the provisions of this part, see the Comment to this part under the part heading.

§ 10451. Notice of hearing

Comment. Section 10451 continues Section 10451 of the repealed Probate Code without substantive change. For general provisions, see Sections 1020-1023 (petitions and other papers), 1200-1230 (notice of hearing), 1250-1252 (request for special notice), 1260-1265 (proof of giving of notice). As to the application of this part where independent administration authority was granted under the repealed Probate Code, see Section 10406.

Background on Section 10451 of Repealed Code

Section 10451 was added by 1987 Cal. Stat. ch. 923 § 93. Subdivision (a) restated subdivision (c) of former Probate Code Section 591.1 (repealed by 1987 Cal. Stat. ch. 923 § 35) without substantive change.

Subdivision (b) restated subdivision (d) of former Section 591.1 (repealed by 1987 Cal. Stat. ch. 923 § 35) with the following additions and changes:

(1) The requirement that notice be given to each known heir whose interest in the estate is affected by the petition replaced the former requirement of notice to "all known heirs of the decedent."

(2) The requirement that notice be given to each known devisee whose interest in the estate is affected by the petition replaced the former requirement of notice to "all

legatees and devisees." See Section 34 (defining "devisee"). See also Section 1206 (notice to known devisees).

(3) The requirement that notice be given to each person named as personal representative in the will of the decedent was new.

The reference in former Section 591.1 to former Probate Code Section 1200 (notice by posting) (repealed by 1987 Cal. Stat. ch. 923 § 59) was corrected in subdivision (b) of Section 10451 to refer to Section 1220 (notice by mail) of the repealed Probate Code. Section 1220 of the repealed Probate Code required 15 days' notice instead of the ten days' notice required under former Probate Code Sections 1200 and 1200.5 (provisions repealed by 1987 Cal. Stat. ch. 923 § 59).

Subdivision (c) restated subdivision (e) of former Section 591.1 (repealed by 1987 Cal. Stat. ch. 923 § 35) with the addition in Section 10451 of the last three sentences of the statement which were new.

For background on the provisions of this part, see the Comment to this part under the part heading.

§ 10452. Hearing and order

Comment. Section 10452 restates Section 10452 of the repealed Probate Code without substantive change. The making of an objection to the granting of independent administration authority is governed by Section 1043. The second sentence of Section 10452 makes clear that the court, for good cause shown, may grant only limited authority rather than full authority. See Sections 10402 (defining "full authority"), 10403 (defining "limited authority"). See also Section 10450(b)(2) (petition for limited authority). As to the application of this part where independent administration authority was granted under the repealed Probate Code, see Section 10406.

Background on Section 10452 of Repealed Code

Section 10452 was added by 1987 Cal. Stat. ch. 923 § 93. Subdivision (a) superseded subdivision (f) of former Probate Code Section 591.1 (repealed by 1987 Cal. Stat. ch. 923 § 35). Subdivisions (b) and (c) of Section 10452 of the repealed Probate Code restated subdivision (g) of former Section 591.1 without substantive change, except that the endorsement on the letters required by subdivision (c) of Section 10452 where limited authority is granted was made consistent with subdivision (b) of Section 10501. Subdivision (c) was deleted by 1989 Cal. Stat. ch. 21 § 25 because it duplicated Section 8405(c). See *Communication from the California Law Revision Commission Concerning Assembly Bill 156,* 20 Cal. L. Revision Comm'n Reports 227, 231 (1990). For background on the provisions of this part, see the Comment to this part under the part heading.

§ 10453. Amount of bond

Comment. Section 10453 continues Section 10453 of the repealed Probate Code with clarifying revisions that conform the section to Section 8482 (bond of personal representative). This section applies only where the personal representative is otherwise required to file a bond. See Sections 301 (no bond required of trust company serving as personal representative), 8481 (waiver of bond in will or by all the heirs or

beneficiaries under will). Subdivision (b) makes clear that the amount of the bond does not include the estimated value of the decedent's interest in real property where only limited authority is granted. As to the application of this part where independent administration authority was granted under the repealed Probate Code, see Section 10406.

Background on Section 10453 of Repealed Code

Section 10453 was added by 1987 Cal. Stat. ch. 923 § 93. Subdivision (a) restated subdivision (b) of former Probate Code Section 591.9 (repealed by 1987 Cal. Stat. ch. 923 § 35) but made clear that the court is required to fix the amount of the bond at not more than the amount specified in the section rather than at "not less than" that amount as provided in former Probate Code Section 591.9. Subdivision (b) was a new provision that was consistent with the provision of former Probate Code Section 541 (repealed by 1988 Cal. Stat. ch. 1199 § 48) that excluded the value of real property in determining amount of the bond. For background on the provisions of this part, see the Comment to this part under the part heading.

§ 10454. Revoking or limiting independent administration authority

Comment. Section 10454 continues Section 10454 of the repealed Probate Code without change. For general provisions, see Sections 1000-1004 (rules of practice), 1020-1023 (petitions and other papers), 1040-1050 (hearings and orders), 1200-1230 (notice of hearing), 1250-1252 (request for special notice), 1260-1265 (proof of giving of notice). As to the application of this part where independent administration authority was granted under the repealed Probate Code, see Section 10406.

Background on Section 10454 of Repealed Code

Section 10454 was added by 1987 Cal. Stat. ch. 923 § 93. The section restated former Probate Code Section 591.7 (repealed by 1987 Cal. Stat. ch. 923 § 35) with the following changes:

(1) Section 10454 made clear that an order may be made which revokes full authority and instead grants limited authority.

(2) The requirement that notice of the hearing be given as provided in Section 1220 was new. Former Section 591.7 required notice of hearing only to the personal representative. Giving notice of hearing as provided in Section 1220 gives notice to other persons who may be interested in the petition.

Section 10454 was amended by 1989 Cal. Stat. ch. 544 § 16 to reflect the deletion of subdivision (c) from former Section 10452 (amended by 1989 Cal. Stat. ch. 21 § 25), the substance of this provision being found in Section 8405(c). See *Communication from the California Law Revision Commission Concerning Assembly Bill 158*, 20 Cal. L. Revision Comm'n Reports 235, 242 (1990).

For background on the provisions of this part, see the Comment to this part under the part heading.

CHAPTER 3. ADMINISTRATION UNDER INDEPENDENT ADMINISTRATION AUTHORITY

Article 1. General Provisions

§ 10500. Administration without court supervision

Comment. Section 10500 continues Section 10500 of the repealed Probate Code without change.

As the introductory clause of subdivision (a) recognizes, a personal representative who has been granted only limited authority under this part may not exercise authority with respect to matters not included within the scope of the authority granted. See Section 10501(b) (limited authority excludes power to sell, exchange, or grant option to purchase real property, or to borrow money with the loan secured by an encumbrance upon real property, using independent administration procedure). See also Sections 10403, 10450(b)(2), 10452 (limited authority); Section 10502 (decedent's will may restrict powers exercisable under independent administration authority). Notwithstanding that full authority has been granted, some actions can be taken only under court supervision. See Section 10501 (court supervision required for allowance of compensation of the personal representative, settlement of accounts, preliminary and final distributions and discharge, and certain transactions involving a possible conflict of interest on the part of the personal representative or the personal representative's attorney). See also Section 10401 (defining "court supervision").

The introductory clause of subdivision (a) also recognizes that independent administration authority must be exercised in compliance with the provisions of this part. Some actions can be taken only if the notice of proposed action procedure is followed. See Article 2 (commencing with Section 10510), Article 3 (commencing with Section 10530) (actions requiring notice of proposed action); see also Chapter 4 (commencing with Section 10580) (notice of proposed action procedure). For a general provision concerning the exercise of powers under this part, see Section 10502. See also the Comment to Section 10502.

Subdivision (b) makes clear that the personal representative may obtain court supervision of an action even though the personal representative is authorized to take the action using the independent administration procedure. For example, even though the personal representative has been granted full authority (full authority includes the power to sell real property using the independent administration procedure), the personal representative may nevertheless determine to sell the real property using the court supervised procedure for a real property sale. If the personal representative determines to use the court

supervised procedure, all the requirements of the court supervised procedure apply to the same extent that they would apply if the personal representative had not been granted independent administration authority. See Section 10401 (defining "court supervision"). For example, except as provided in Sections 10301-10303, the requirement that notice of sale be published must be satisfied. See Section 10300. See also Section 10303 (notice of sale need not be published where decedent's will directs or authorizes the sale).

Where the personal representative decides to obtain court supervision of an action even though the personal representative is authorized to take the action using the independent administration procedure and no other procedure is provided by statute for court supervision of the particular proposed action, the personal representative may petition for instructions under Section 9611. For example, there being no specific procedure for obtaining authority under supervised administration for incorporation of the decedent's unincorporated business (see Section 10512), the personal representative may elect to petition for instructions under Section 9611 rather than using the notice of proposed action procedure under Chapter 4 (commencing with Section 10580). Likewise, although the personal representative may use the independent administration procedure with respect to the hiring and compensation of persons under Section 10565, the personal representative may decide to obtain court approval of the hiring and compensation by petitioning under Section 9684. See also Section 10580(b) (personal representative may use notice of proposed action procedure for an action that could be taken without giving notice of proposed action).

As to the application of this part where independent administration authority was granted under the repealed Probate Code, see Section 10406.

Background on Section 10500 of Repealed Code

Section 10500 was added by 1987 Cal. Stat. ch. 923 § 93. Subdivision (a) restated the first sentence and the first portion of the second sentence of subdivision (a) of former Probate Code Section 591.2 (repealed by 1987 Cal. Stat. ch. 923 § 35) without substantive change. See also Section 10401 (defining "court supervision"). Subdivision (b) restated the first sentence of subdivision (b) of former Section 591.2 (repealed by 1987 Cal. Stat. ch. 923 § 35) without substantive change. For background on the provisions of this part, see the Comment to this part under the part heading.

§ 10501. Matters requiring court supervision

Comment. Section 10501 continues Section 10501 of the repealed Probate Code without change. This section does not apply in any proceeding commenced before January 1, 1991. See Section 10406(c). As to the law applicable in a proceeding commenced before January 1,

1991, see Section 10406(c). As to the application of any amendments made after that date, see Section 3.

The types of actions described in paragraphs (4)-(9) of subdivision (a) are ones where there often will be a conflict of interest.

Paragraphs (4)-(6) of subdivision (a) make clear that the personal representative cannot use the independent administration procedure to do any of the following:

(1) Sell estate property to the personal representative or the personal representative's attorney.

(2) Exchange estate property for property of the personal representative or the personal representative's attorney.

(3) Grant an option to purchase estate property to the personal representative or the personal representative's attorney.

The prohibitions of paragraphs (4)-(6) are subject to the qualification that the independent administration procedure may be used for the transaction when it is between the personal representative as such and the personal representative as an individual and the requirements of subdivision (c) of Section 10501 are satisfied. Special supervised administration provisions govern the transactions described in paragraphs (4)-(6). See, e.g., Sections 9880-9885. A purchase by or exchange with the personal representative or the personal representative's attorney may be accomplished only to the extent allowed under these special provisions and is subject to their limitations and requirements. Under these provisions, the purchase is permitted only if all known heirs or devisees give written consent to the purchase (Section 9881) and the court approves the purchase (Section 9883). The personal representative or personal representative's attorney may purchase property of the estate pursuant to a contract made during the lifetime of the decedent only if the statutory supervised administration requirements are satisfied. See Sections 9860-9868, 9884. The personal representative or personal representative's attorney may exercise an option to purchase property of the estate given in the will of the decedent only if the statutory supervised administration requirements are satisfied. See Sections 9885, 9980-9983.

Paragraph (7) of subdivision (a) makes clear that the personal representative may not use the independent administration procedure for a claim against the estate by the personal representative or the personal representative's attorney. The personal representative must submit the claim for allowance or rejection by the judge pursuant to Section 9252. Paragraph (7) is subject to the qualification that the independent administration procedure may be used for a claim of the personal representative against the estate if the requirements of subdivision (c) are satisfied.

Paragraphs (8) and (9) of subdivision (a) preclude the use of independent administration to compromise or settle a claim, action, or proceeding of the estate against the personal representative or the personal representative's attorney or to modify the terms of a debt or similar obligation of the personal representative or the personal representative's attorney to the estate. A special provision governs these transactions. See Sections 9830, 9834. Independent administration procedure may be used for the actions described in paragraphs (8) and (9) between the personal representative as such and the personal representative as an individual if the requirements of subdivision (c) are satisfied.

Paragraph (4) of subdivision (b) requires court supervision if the personal representative has limited authority and proposes to borrow money with the loan secured by an encumbrance upon real property of the estate. This limitation on borrowing money does not affect the powers of a personal representative who was granted independent administration authority prior to July 1, 1988. See Section 10406(b). In connection with subdivision (b), see Sections 10403, 10450(b)(2), 10452 (limited authority). See also Section 10502 (decedent's will may restrict powers exercisable under independent administration authority).

Subdivision (c) permits the use of the independent administration procedure for a transaction between the personal representative as such and the personal representative as an individual under the circumstances described in the subdivision. Subdivision (c) does not permit use of the independent administration procedure where the transaction involves the personal representative's attorney; such a transaction is subject to the applicable court supervision provisions referred to above.

The term "the attorney for the personal representative" is used in a broad sense and includes the associates, partners, and attorneys of counsel with the law firm of the attorney selected by the personal representative and also associates, partners, and attorneys of counsel with other law firms associated in the estate proceeding with the firm of the attorney selected by the personal representative.

Subdivision (d) makes clear that independent administration procedure may be used for the hiring and paying of persons, including the estate attorney, to advise or assist the personal representative. See also Sections 10404.5, 10565, 10585.5. Independent administration procedures cannot be used for the allowance of attorney fees in a proceeding commenced before January 1, 1991. See Section 10406(c).

As to the application of this part where independent administration authority was granted under the repealed Probate Code, see Section 10406.

Background on Section 10501 of Repealed Code

Section 10501 was added by 1987 Cal. Stat. ch. 923 § 93.

Paragraphs (1)-(4) of subdivision (a) restated without substantive change clauses (1)-(3) of the second sentence of subdivision (a) of former Probate Code Section 591.2 (repealed by 1987 Cal. Stat. ch. 923 § 35). Paragraphs (5)-(10) of subdivision (a) were new. Prior law did not expressly provide that the independent administration procedure could not be used for the types of actions listed in those paragraphs.

Paragraphs (1)-(3) of subdivision (b) restated without substantive change clause (4) of the second sentence of subdivision (a) of former Section 591.2 (repealed by 1987 Cal. Stat. ch. 923 § 35). Paragraph (4) of subdivision (b) was new and required court supervision if the personal representative has limited authority and proposes to borrow money with the loan secured by an encumbrance upon real property of the estate. Under former law, the personal representative with limited authority could use independent administration authority to borrow money with the loan secured by an encumbrance upon real property.

Subdivision (c) was new.

Section 10501 was amended by 1990 Cal. Stat. [AB 831] to delete from subdivision (a) the former requirement that court supervision be obtained for allowance of attorney's fees and to add subdivision (d). The revision of subdivision (a) and the addition of subdivision (d) were consistent with the provision in supervised administration that compensation of the attorney for the personal representative is fixed by private agreement and that court approval is not required. See Section 9681. See also Section 9684 and the Comment to that section (court review of compensation of attorney). The 1989 amendment also substituted "compensation" for "commissions" in paragraph (1) of subdivision (a). This conformed to the language used in the provisions relating to compensation of the personal representative. See Sections 10800-10805. See also *Recommendations Relating to Probate Law: Hiring and Paying Attorneys, Advisors, and Others; Compensation of Personal Representative*, 20 Cal. L. Revision Comm'n Reports 31 (1990), and *Communication from the California Law Revision Commission Concerning Assembly Bill 831*, 20 Cal. L. Revision Comm'n Reports ___ (1990).

For background on the provisions of this part, see the Comment to this part under the part heading.

§ 10502. Powers exercisable under independent administration authority

Comment. Section 10502 continues Section 10502 of the repealed Probate Code without change.

The reference to Section 9600 (duty to manage estate using ordinary care and diligence) in subdivision (a) of Section 10502 recognizes that the personal representative acts in a fiduciary capacity in exercising the powers under this part. The personal representative is required to exercise the power granted under this part to the extent that ordinary care and diligence requires that the power be exercised and may not exercise the power to the extent that ordinary care and diligence requires that the power not be exercised. See Section 9600(b). As to the effect of court authorization or approval, see Section 7250. See also Section 10590 (court review of action taken pursuant to independent administration authority).

As the introductory clause of subdivision (a) of Section 10502 recognizes, the powers of the personal representative are subject to the conditions and limitations of this part. Thus, a personal representative who has been granted only limited authority under this part may not exercise independent administration authority with respect to matters not included within the scope of the authority granted. See Section 10501(b) (limited authority excludes power to sell, exchange, or grant option to purchase real property, or to borrow money secured by encumbrance on real property, using independent administration procedure). See also Sections 10403, 10450(b)(2), 10452 (limited authority); Section 10501 (matters requiring court supervision notwithstanding grant of independent administration authority).

Subdivision (b) of Section 10502 states another limitation on the exercise of powers by the personal representative: The decedent's will may limit the powers of the personal representative under this part. See also Section 10404 (part not applicable if decedent's will so provides).

A further limitation on the exercise of independent administration powers is that in some cases powers described in this chapter may be exercised only if notice of proposed action is given or the person entitled to notice of proposed action has waived the notice or has consented to the proposed action. If a person entitled to notice of proposed action makes a timely objection to the proposed action, it may be taken only under court supervision. See Chapter 4 (commencing with Section 10580) (notice of proposed action procedure). As to when notice of proposed action is required, see Article 2 (commencing with Section 10510) and Article 3 (commencing with Section 10530).

As to the application of this part where independent administration authority was granted under the repealed Probate Code, see Section 10406.

Background on Section 10502 of Repealed Code

Section 10502 was added by 1987 Cal. Stat. ch. 923 § 93. The section restated the introductory clause of former Probate Code Section 591.6 (repealed by 1987 Cal. Stat. ch. 923 § 35) without substantive change except that the portion of former Section 591.6 giving the executor or administrator powers "in addition to any other powers granted by this code" was superseded by Section 10551.

The reference to Section 9600 (duty to manage estate using ordinary care and diligence) was new and was added to Section 10502 to recognize that the personal representative acts in a fiduciary capacity in exercising the powers under this part. This reference continued and generalized the substantive effect of the phrase "the applicable fiduciary duties" which appeared in former Probate Code Section 591.9 (repealed by 1987 Cal. Stat. ch. 923 § 35).

For background on the provisions of this part, see the Comment to this part under the part heading.

§ 10503. Manner of sale of property under independent administration authority

Comment. Section 10503 continues Section 10503 of the repealed Probate Code without change. This section concerns the manner of sale of property when the personal representative exercises the power to sell property. The power to sell property is found in other provisions of this chapter. See Sections 10511 (real property) and 10537 (personal property). See also Sections 10515 (granting option to purchase real property), 10516 (transferring to person given option to purchase in will), 10517 (completing contract of decedent to convey or transfer property), 10538 (granting exclusive right to sell property). The personal representative acts in a fiduciary capacity in exercising the powers granted by this part. See Sections 9600, 10502, and the Comment to Section 10502.

Section 10503 makes clear that sales under independent administration authority are not subject to the statutory requirements that apply to sales made under court supervision. Thus, for example, the commission of the realtor who lists or obtains the purchaser of real property sold under independent administration authority is not subject to the approval of the court and the provisions concerning contracts and commissions of agents or brokers (Sections 10150-10166) are not applicable. Nor does the 90-percent-of-appraised-value requirement apply when a sale is made under independent administration authority. Nor does the court examine into the efforts of the personal representative to obtain the highest and best price for the property reasonably attainable as is the case where there is a court hearing on the confirmation of a real property sale. Publication of notice of sale is not required where the sale is made under independent administration authority. Likewise, notice of sale, court confirmation, and approval of the commission of the agent, broker, or auctioneer is not required where a sale of personal property is made under independent administration authority.

The personal representative who has been granted only limited authority may not exercise independent administration authority with respect to the sale, exchange, or granting of an option to purchase real property. See Section 10501(b) (limited authority excludes power to sell, exchange, or grant option to purchase real property using independent administration procedure). See also Sections 10403, 10450(b)(2), 10452 (limited authority). The decedent's will may restrict the exercise of the power to sell property. See Section 10502. See also the Comment to Section 10502. In addition, except in certain narrowly limited circumstances, independent administration authority may not be used to

sell estate property to the personal representative or the personal representative's attorney. See Section 10501.

Unless notice has been waived or consent to the proposed action has been obtained, notice of proposed action under Chapter 4 (commencing with Section 10580) is required to sell or exchange real property (Section 10511) or to sell or exchange personal property except for certain kinds of property (Section 10537). Absent waiver of notice or consent to the proposed action, notice of proposed action also is required for selling the decedent's unincorporated business (Section 10512), granting an option to purchase real property (Section 10515), transferring to a person given an option to purchase in the decedent's will (Section 10516), completing a contract by decedent to convey property (Section 10517), or granting an extension of an exclusive right to sell property that will cause the entire period covered by the right to exceed 270 days (Section 10538).

The personal representative has the power to execute any conveyance needed to effectuate the sale. See Section 10555.

As to the application of this part where independent administration authority was granted under the repealed Probate Code, see Section 10406.

Background on Section 10503 of Repealed Code

Section 10503 was added by 1987 Cal. Stat. ch. 923 § 93. The section restated subdivision (a) of former Probate Code Section 591.9 (repealed by 1987 Cal. Stat. ch. 923 § 35) without substantive change. The phrase "for cash or on credit" was continued in Section 10503 from subdivision (a) of former Probate Code Section 591.6 (repealed by 1987 Cal. Stat. ch. 923 § 35). The phrase "the applicable fiduciary duties" which appeared in subdivision (a) of former Section 591.9 was replaced by Section 10502 (personal representative acts in a fiduciary capacity in exercising the powers granted by this part). See also Section 9600 and the Comment to Section 10502. For background on the provisions of this part, see the Comment to this part under the part heading.

Article 2. Powers Exercisable Only After Giving Notice of Proposed Action

§ 10510. Article describes powers that may be exercised only after giving notice of proposed action

Comment. Section 10510 continues Section 10510 of the repealed Probate Code without change. This section conditions the exercise of the powers described in this article: Those powers may be exercised only if the requirements of Chapter 4 (commencing with Section 10580) (notice of proposed action procedure) are satisfied.

The personal representative is required to exercise a power granted under this article to the extent that ordinary care and diligence requires that the power be exercised and may not exercise the power to the extent

that ordinary care and diligence requires that the power not be exercised. See Section 9600(b). See also Section 10502 (introductory clause) and the Comment thereto. As to the effect of court authorization or approval, see Section 7250. See also Section 10590 (court review of action taken pursuant to independent administration authority).

The personal representative may not take certain actions under independent administration authority where there is a conflict of interest between the interest of the personal representative and the interest of the estate. See Section 10501 (except in certain narrowly limited circumstances, personal representative cannot use independent administration procedure to sell property of the estate to the personal representative or the personal representative's attorney, to exchange estate property for property of the personal representative or the personal representative's attorney, or to grant to the personal representative or to the personal representative's attorney an option to purchase property of the estate). See also the Comment to Section 10501.

A personal representative who has been granted only limited authority may not exercise independent administration authority with respect to matters not included within the scope of the authority granted. See Section 10502 and the Comment thereto. See also Section 10501(b) (limited authority excludes power to sell, exchange, or grant option to purchase real property, or to borrow money secured by encumbrance on real property, using independent administration procedure); Sections 10403, 10450(b)(2), 10452 (limited authority); Section 10501 (matters requiring court supervision notwithstanding grant of independent administration authority). The decedent's will may limit the powers of the personal representative under this part. See Section 10502.

As to the application of this part where independent administration authority was granted under the repealed Probate Code, see Section 10406.

Background on Section 10510 of Repealed Code

Section 10510 was added by 1987 Cal. Stat. ch. 923 § 93. The section continued the substance of the phrase "which powers can be exercised in the manner provided in this article" which was found in the introductory portion of former Probate Code Section 591.6 (repealed by 1987 Cal. Stat. ch. 923 § 35). For background on the provisions of this part, see the Comment to this part under the part heading.

§ 10511. Selling or exchanging real property

Comment. Section 10511 continues Section 10511 of the repealed Probate Code without change. Concerning the exercise of powers described in this article, see Sections 10502 and 10510 and the Comments to those sections. The power described in Section 10511 may be exercised only if the requirements of Chapter 4 (commencing with

Section 10580) (notice of proposed action procedure) are satisfied. See Section 10510. For a general provision concerning the manner of sale of real property under independent administration, see Section 10503. The personal representative has power to make any conveyance needed to effectuate the power granted by Section 10511. See Section 10555.

A personal representative who has been granted only limited authority may not sell or exchange real property using the independent administration procedure. See Section 10501(b) (limited authority excludes power to sell or exchange real property using independent administration procedure). See also Sections 10403, 10450(b)(2), 10452 (limited authority).

Except in certain narrowly limited circumstances, the personal representative may not use independent administration authority to sell property of the estate to the personal representative or the personal representative's attorney or to exchange estate property for property of the personal representative or the personal representative's attorney. See Section 10501 and the Comment thereto.

As to the application of this part where independent administration authority was granted under the repealed Probate Code, see Section 10406.

Background on Section 10511 of Repealed Code

Section 10511 was added by 1987 Cal. Stat. ch. 923 § 93. Section 10511, together with Section 10510, restated without substantive change a portion of subdivision (a) of former Probate Code Section 591.6 (powers of personal representative) and subdivision (b)(1) of former Probate Code Section 591.3 (notice of proposed action required) (provisions repealed by 1987 Cal. Stat. ch. 923 § 35). For background on the provisions of this part, see the Comment to this part under the part heading.

§ 10512. Selling or incorporating decedent's business

Comment. Section 10512 continues Section 10512 of the repealed Probate Code without change. Concerning the exercise of powers described in this article, see Sections 10502 and 10510 and the Comments thereto. The power described in Section 10512 may be exercised only if the requirements of Chapter 4 (commencing with Section 10580) (notice of proposed action procedure) are satisfied. See Section 10510. Real or personal property or both may be sold in connection with the sale of the decedent's business. For a general provision concerning the manner of sale of real property under independent administration, see Section 10503. The personal representative has power to execute any conveyance needed to effectuate the power granted by Section 10512. See Section 10555. As to the power to continue the operation of the decedent's business, see Section 10534.

If the business includes ownership of real property, the personal representative who has been granted only limited authority may not sell or exchange the real property using the independent administration procedure. See Section 10501(b) (limited authority excludes power to sell or exchange real property using independent administration procedure). See also Sections 10403, 10450(b)(2), 10452 (limited authority).

Except in certain narrowly limited circumstances, the personal representative may not use independent administration authority to sell property of the estate to the personal representative or the personal representative's attorney. See Section 10501 and the Comment thereto.

As to the application of this part where independent administration authority was granted under the repealed Probate Code, see Section 10406.

Background on Section 10512 of Repealed Code

Section 10512 was added by 1987 Cal. Stat. ch. 923 § 93. Section 10512, together with Section 10510, restated the last portion of subdivision (b)(6) of former Probate Code Section 591.3 (repealed by 1987 Cal. Stat. ch. 923 § 35) without substantive change. For background on the provisions of this part, see the Comment to this part under the part heading.

§ 10513. Abandoning tangible personal property

Comment. Section 10513 continues Section 10513 of the repealed Probate Code without change. The language used in Section 10513 is comparable to that used in the provision governing supervised administration. See Sections 9780-9788. Section 10513 applies only to tangible personal property. As to the power with respect to real property and intangible personal property, see Sections 10552 (compromising or settling claim, action, or proceeding), 10553 (commencing and defending actions and proceedings).

Concerning the exercise of powers described in this article, see Sections 10502 and 10510 and the Comments thereto. The power described in Section 10513 may be exercised only if the requirements of Chapter 4 (commencing with Section 10580) (notice of proposed action procedure) are satisfied. See Section 10510. As to the application of this part where independent administration authority was granted under the repealed Probate Code, see Section 10406.

Background on Section 10513 of Repealed Code

Section 10513 was added by 1987 Cal. Stat. ch. 923 § 93. The section superseded subdivision (d) of former Probate Code Section 591.6 (repealed by 1987 Cal. Stat. ch. 923 § 35) which did not require notice of proposed action to abandon property and was not limited to tangible personal property. The language "or any interest therein," which appeared in subdivision (d) of former Section 591.6 was omitted from Section 10513. This language was unnecessary in view of the definition of property which

includes "any interest therein." See Section 62 (defining "property"). For background on the provisions of this part, see the Comment to this part under the part heading.

§ 10514. Borrowing; encumbering estate property

Comment. Section 10514 continues Section 10514 of the repealed Probate Code without change. Concerning the exercise of powers described in this article, see Sections 10502 and 10510 and the Comments thereto. The power described in Section 10514 may be exercised only if the requirements of Chapter 4 (commencing with Section 10580) (notice of proposed action procedure) are satisfied. See Section 10510. For provisions relating to supervised administration, see Sections 9800-9807.

A personal representative who has been granted only limited authority may not borrow money with the loan secured by an encumbrance upon real property of the estate using the independent administration procedure. See Section 10501(b)(4). See also Sections 10403, 10450(b)(2), 10452 (limited authority). If the personal representative was granted independent administration authority prior to July 1, 1988, the personal representative may use that existing authority on and after July 1, 1988, to borrow money on a loan secured by an encumbrance upon real property, whether or not that existing authority includes authority to sell real property. See Section 10406(b).

Background on Section 10514 of Repealed Code

Section 10514 was added by 1987 Cal. Stat. ch. 923 § 93. Section 10514, together with Section 10510, restated subdivision (c) of former Probate Code Section 591.6 (powers of personal representative) and subdivision (b)(10) of former Probate Code Section 591.3 (notice of proposed action required) (provisions repealed by 1987 Cal. Stat. ch. 923 § 35) with the addition of subdivision (b) which made Section 10514 consistent with Section 10501(b)(4). See the Comment to Section 10501. For background on the provisions of this part, see the Comment to this part under the part heading.

§ 10515. Granting option to purchase real property

Comment. Section 10515 continues Section 10515 of the repealed Probate Code without change. Concerning the exercise of powers described in this article, see Sections 10502 and 10510 and the Comments thereto. The power described in Section 10515 may be exercised only if the requirements of Chapter 4 (commencing with Section 10580) (notice of proposed action procedure) are satisfied. See Section 10510. See also Section 10503 (manner of sale of property under independent administration authority).

A personal representative who has been granted only limited authority may not grant an option to purchase real property of the estate using the independent administration procedure. See Section 10501(b) (limited

authority excludes power to grant an option to purchase real property). See also Sections 10403, 10450(b)(2), 10452 (limited authority). For the comparable provision under supervised administration, see Section 9960.

Except in certain narrowly limited circumstances, independent administration authority may not be used to grant an option to the personal representative or the personal representative's attorney to purchase property of the estate. See Section 10501 and the Comment thereto.

As to the application of this part where independent administration authority was granted under the repealed Probate Code, see Section 10406.

Background on Section 10515 of Repealed Code

Section 10515 was added by 1987 Cal. Stat. ch. 923 § 93. Section 10515, together with Section 10510, restated without substantive change the last portion of subdivision (a) of former Probate Code Section 591.6 (powers of personal representative) and subdivision (b)(2) of former Probate Code Section 591.3 (notice of proposed action required) (provisions repealed by 1987 Cal. Stat. ch. 923 § 35). For background on the provisions of this part, see the Comment to this part under the part heading.

§ 10516. Transferring to person given option to purchase in will

Comment. Section 10516 continues Section 10516 of the repealed Probate Code without change. For the comparable provision under supervised administration, see Section 9980.

Concerning the exercise of powers described in this article, see Sections 10502 and 10510 and the Comments thereto. The power described in Section 10516 may be exercised only if the requirements of Chapter 4 (commencing with Section 10580) (notice of proposed action procedure) are satisfied. See Section 10510. The personal representative has the power to execute any conveyance needed to effectuate the power granted by Section 10516. See Section 10555.

The personal representative has the specific power described in Section 10516 even though the personal representative has only limited authority. The limitations of Section 10501 that independent administration authority may not be used for certain transactions involving the transfer of estate property to the personal representative or the personal representative's attorney do not apply to the exercise of the power granted by Section 10516.

As to the application of this part where independent administration authority was granted under the repealed Probate Code, see Section 10406.

Background on Section 10516 of Repealed Code

Section 10516 was added by 1987 Cal. Stat. ch. 923 § 93. Section 10516 was a new provision, but the power to transfer to a person given an option in the will probably was embraced within the power to "convey" in subdivision (a) of former Probate Code

Section 591.6 (repealed by 1987 Cal. Stat. ch. 923 § 35). For background on the provisions of this part, see the Comment to this part under the part heading.

§ 10517. Completing contract of decedent to convey or transfer property

Comment. Section 10517 continues Section 10517 of the repealed Probate Code without change. For the comparable provision under supervised administration, see Section 9860.

Concerning the exercise of powers described in this article, see Sections 10502 and 10510 and the Comments thereto. The power described in Section 10517 may be exercised only if the requirements of Chapter 4 (commencing with Section 10580) (notice of proposed action procedure) are satisfied. See Section 10510. The personal representative has the power to execute any conveyance needed to effectuate the power granted by Section 10517. See Section 10555.

The personal representative has the specific power described in Section 10517 even though the personal representative has only limited authority. The limitations of Section 10501 that independent administration authority may not be used for certain transactions involving the transfer of estate property to the personal representative or the personal representative's attorney do not apply to the exercise of the power granted by Section 10517.

As to the application of this part where independent administration authority was granted under the repealed Probate Code, see Section 10406.

Background on Section 10517 of Repealed Code

Section 10517 was added by 1987 Cal. Stat. ch. 923 § 93. The section restated subdivision (b)(9) of former Probate Code Section 591.3 (repealed by 1987 Cal. Stat. ch. 923 § 35) without substantive change. For background on the provisions of this part, see the Comment to this part under the part heading.

§ 10518. Determining claims to property claimed to belong to decedent or other person

Comment. Section 10518 continues Section 10518 of the repealed Probate Code with the substitution of the more precise and accurate words "allow, compromise, or settle" for "determine." For the comparable provision under supervised administration, see Section 9860.

Concerning the exercise of powers described in this article, see Sections 10502 and 10510 and the Comments thereto. The power described in Section 10518 may be exercised only if the requirements of Chapter 4 (commencing with Section 10580) (notice of proposed action procedure) are satisfied. See Section 10510. Except in certain narrowly limited circumstances, independent administration authority may not be used to compromise or settle a claim of the personal representative or the

personal representative's attorney against the estate. See Section 10501 and the Comment thereto.

As to the application of this part where independent administration authority was granted under the repealed Probate Code, see Section 10406.

Background on Section 10518 of Repealed Code

Section 10518 was added by 1987 Cal. Stat. ch. 923 § 93. The section restated subdivision (b)(11) of former Probate Code Section 591.3 (repealed by 1987 Cal. Stat. ch. 923 § 35) without substantive change. For background on the provisions of this part, see the Comment to this part under the part heading.

§ 10519. Making a disclaimer

Comment. Section 10519 continues Section 10519 of the repealed Probate Code without change. For the provisions relating to disclaimers, see Part 8 (commencing with Section 260) of Division 2. Concerning the exercise of powers described in this article, see Sections 10502 and 10510 and the Comments thereto. The power described in Section 10519 may be exercised only if the requirements of Chapter 4 (commencing with Section 10580) (notice of proposed action procedure) are satisfied. See Section 10510. As to the application of this part where independent administration authority was granted under the repealed Probate Code, see Section 10406.

Background on Section 10519 of Repealed Code

Section 10519 was added by 1987 Cal. Stat. ch. 923 § 93. The section restated subdivision (n) of former Probate Code Section 591.6 (powers of personal representative) (repealed by 1987 Cal. Stat. ch. 923 § 35) except that notice of proposed action was not required to exercise this power under former law. For background on the provisions of this part, see the Comment to this part under the part heading.

Article 3. Powers the Exercise of Which Requires Giving of Notice of Proposed Action Under Some Circumstances

§ 10530. Article describes powers that may in some circumstances be exercised only after giving notice of proposed action

Comment. Section 10530 continues Section 10530 of the repealed Probate Code without change.

The powers set out in this article are powers that under some circumstances may be exercised without giving notice of proposed action and in other circumstances may be exercised only if the notice of proposed action procedure requirements are satisfied. Section 10530 permits the exercise of powers described in this article without giving notice of proposed action under Chapter 4 (commencing with Section 10580) except to the extent otherwise provided in this article.

The personal representative is required to exercise a power granted

under this article to the extent that ordinary care and diligence requires that the power be exercised and may not exercise the power to the extent that ordinary care and diligence requires that the power not be exercised. See Section 9600(b). See also Section 10502 (introductory clause) and the Comment thereto. As to the effect of court authorization or approval, see Section 7250. See also Section 10590 (court review of action taken pursuant to independent administration authority).

Subdivision (b) of Section 10580 permits a personal representative to use the procedure provided in Chapter 4 (notice of proposed action procedure) with respect to an action that the personal representative proposes to take under a power granted by this article even though the action is not one for which notice of proposed action is required under this article. For example, the personal representative may want to proceed under Chapter 4 where the proposed action is the making of a contract that will be fully performed within two years. Entering into such a contract ordinarily does not require notice of proposed action. See Section 10532. Or, for example, the personal representative may want to proceed under Chapter 4 where the proposed action is the entering into a lease of real property for a term not in excess of one year. This action does not require notice of proposed action. See Section 10536(b). If the procedure provided by Chapter 4 is used with respect to the proposed action, the person who fails to object to the proposed action waives the right to have the court later review the action taken. See Section 10590 and the Comment thereto. See also Section 10589(b) and the Comment thereto.

The personal representative may not take certain actions under independent administration authority where there is a potential for conflict of interest between the interest of the personal representative and the interest of the estate. See Section 10501 and the Comment thereto.

The decedent's will may limit the powers of the personal representative under this part. See Section 10502.

As to the application of this part where independent administration authority was granted under the repealed Probate Code, see Section 10406.

Background on Section 10530 of Repealed Code

Section 10530 was added by 1987 Cal. Stat. ch. 923 § 93. For background on the provisions of this part, see the Comment to this part under the part heading.

§ 10531. Managing and controlling estate property generally

Comment. Section 10531 continues Section 10531 of the repealed Probate Code without change. Concerning the exercise of powers described in this article, see Sections 10502 and 10530 and the

Comments thereto. See also Section 10501 (matters requiring court supervision notwithstanding grant of independent administration authority). As to the application of this part where independent administration authority was granted under the repealed Probate Code, see Section 10406.

Background on Section 10531 of Repealed Code

Section 10531 was added by 1987 Cal. Stat. ch. 923 § 93. The first sentence of Section 10531 restated without substantive change the part of the first portion of subdivision (a) of former Probate Code Section 591.6 (repealed by 1987 Cal. Stat. ch. 923 § 35) that gave the personal representative the power to manage and control property of the estate. The second sentence of subdivision (a) and subdivision (b) of Section 10531 were new provisions that made clear that the requirements of Chapter 4 (commencing with Section 10580) (notice of proposed action procedure) must be satisfied where a provision governing the exercise of a specific power so requires.

The provision of subdivision (a) of former Section 591.6 relating to "exchanges" was superseded by Sections 10511 (real property) and 10537 (personal property).

The portion of subdivision (a) of former Section 591.6 that gave the personal representative the power to "convey" property was superseded by various provisions of this chapter which gave the personal representative the power to take particular actions that may involve a conveyance and by Section 10555 which made clear that the personal representative is authorized to execute a conveyance in any case where a power is exercised and the conveyance is necessary to effectuate the exercise of the power.

The portion of subdivision (a) of former Section 591.6 that gave the personal representative the power to "divide" or "partition" property of the estate was not continued. Insofar as the power to "partition" related to partition proceedings, the inclusion of the word in Section 10531 was unnecessary in view of Section 10553 which authorizes the personal representative to institute, maintain, and defend actions and proceedings. Insofar as the power to "divide" or "partition" may have related to division or partition before distribution, the inclusion of this power as an independent administration power was unnecessary to authorize partition or division without court supervision if there is an agreement of the heirs or devisees. See Sections 1100-1106 (repealed and reenacted as Sections 11950-11956). If there is no agreement, the matter is to be decided under the provisions of Sections 11950-11956 rather than by using the independent administration procedure.

For background on the provisions of this part, see the Comment to this part under the part heading.

§ 10532. Entering into contracts

Comment. Section 10532 continues Section 10532 of the repealed Probate Code without change. Concerning the exercise of powers described in this article, see Sections 10502 and 10530 and the Comments thereto. See also Section 10501 (matters requiring court supervision notwithstanding grant of independent administration authority).

Where a contract is made to effectuate an independent administration power, the requirements of Chapter 4 (commencing with Section 10580) (notice of proposed action procedure) must be satisfied if the contract fits

the description of subdivision (b) of Section 10532. For example, the power to lease personal property of the estate under independent administration authority is governed by the limitation of subdivision (b) of Section 10532. See Section 10536(c). But the power to lease real property of the estate under independent administration authority is subject to a more stringent requirement concerning giving of notice of proposed action (see subdivision (b) of Section 10536), and subdivision (c) of Section 10532 makes clear that this more stringent requirement must be satisfied.

The power to make contracts under independent administration authority in connection with the management and control of the estate is included in the power granted by Section 10531. Other specific powers granted in this chapter—including the powers granted by Section 10551 (powers that any personal representative may exercise without court supervision)—by implication include the power to make a contract where necessary to effectuate the specific power granted.

Subdivision (c) makes clear that if a power given by another section is exercised and a contract is executed to carry out that power, the provisions of Chapter 4 (commencing with Section 10580) apply if the section that governs the exercise of the power requires compliance with Chapter 4.

As to the application of this part where independent administration authority was granted under the repealed Probate Code, see Section 10406.

Background on Section 10532 of Repealed Code

Section 10532 was added by 1987 Cal. Stat. ch. 923 § 93.

Subdivisions (a) and (b) restated subdivision (b)(5) of former Probate Code Section 591.3 (repealed by 1987 Cal. Stat. ch. 923 § 35) with two revisions:

(1) A new provision—that the contract is one that cannot be terminated by the personal representative within two years—was added in subdivision (b) of Section 10532. This provision made clear that notice of proposed action is not required by Section 10532 if a contract is one that by its terms can be terminated by the personal representative within two years. A contract that can be terminated within two years is to be treated the same as a contract that is to be fully performed within two years.

(2) The word "fully" was added to subdivision (b) of Section 10532 to make clear that the requirement that the contract be one that will be performed within two years is satisfied only if the contract is one that will be "fully" performed within two years.

Subdivision (c) was new. For background on the provisions of this part, see the Comment to this part under the part heading.

§ 10533. Investing money of the estate

Comment. Section 10533 continues Section 10533 of the repealed Probate Code without change. This section uses language from the supervised administration provisions. See Sections 9700 (investment in insured account in a financial institution in this state), 9730 (investment

in direct obligations of United States or the State of California, money market mutual fund, investment vehicle authorized for the collective investment of trust funds, units of common trust fund).

Concerning the exercise of powers described in this article, see Sections 10502 and 10530 and the Comments thereto. See also Section 10501 (matters requiring court supervision notwithstanding grant of independent administration authority). For authorization to exercise security subscription or conversion rights under independent administration authority, see Section 10561. See also 10560 (holding securities in name of nominee or in other form). As to the application of this part where independent administration authority was granted under the repealed Probate Code, see Section 10406.

Background on Section 10533 of Repealed Code

Section 10533 was added by 1987 Cal. Stat. ch. 923 § 93. The section superseded subdivision (b) of former Probate Code Section 591.6 (powers of personal representative) and subdivision (b)(8) of former Probate Code Section 591.3 (notice of proposed action required—with certain specified exceptions—for investing funds of the estate) (provisions repealed by 1987 Cal. Stat. ch. 923 § 35). For background on the provisions of this part, see the Comment to this part under the part heading.

§ 10534. Continuing operation of decedent's business

Comment. Section 10534 continues Section 10534 of the repealed Probate Code without change. Concerning the exercise of powers described in this article, see Sections 10502 and 10530 and the Comments thereto. See also Section 10501 (matters requiring court supervision notwithstanding grant of independent administration authority). For the provisions governing supervised administration, see Sections 9760-9763.

The partnership agreement may contain a provision governing the continuance of the personal representative as a partner in the case of the death of a partner, but the power to continue as a general partner is subject to the provisions of the Uniform Partnership Act. See Corp. Code §§ 15001-15045.

Subdivision (d) requires notice of proposed action if the personal representative continues the operation of the business for more than six months from the date letters are first issued to any personal representative, whether the personal representative is a special personal representative or a general personal representative. The six-month period commences to run from the time the first special or general personal representative is issued letters.

Although notice of proposed action is not required in order to continue the operation of the decedent's business for the first six months, the personal representative has the option of giving notice of proposed action

if the personal representative plans to continue the business during this period. See Section 10580(b). If notice of proposed action is given, a person who fails to object to the proposed action waives the right to have the court later review the action taken. See Section 10590 and the Comment thereto. See also the Comment to Section 10530.

As to the application of this part where independent administration authority was granted under the repealed Probate Code, see Section 10406.

Background on Section 10534 of Repealed Code

Section 10534 was added by 1987 Cal. Stat. ch. 923 § 93. The section superseded subdivision (*l*) of former Probate Code Section 591.6 (powers of personal representative) and the first portion of subdivision (b)(6) of former Probate Code Section 591.3 (notice of proposed action) (provisions repealed by 1987 Cal. Stat. ch. 923 § 35). The former provisions did not distinguish between nonpartnership businesses and partnerships in which the decedent was a general partner. However, Sections 9760-9763 relating to supervised administration made that distinction, and Section 10534 was drafted to conform to the supervised administration provisions.

The phrase "to such extent as he or she shall deem to be for the best interest of the estate and those interested therein" which was found in former Section 591.6 was omitted as unnecessary. The introductory clause of Section 10502 recognized that the personal representative is required to exercise a power granted under this chapter to the extent that ordinary care and diligence requires that the power be exercised and may not exercise the power to the extent that ordinary care and diligence requires that the power not be exercised. See Section 9600(b). See also the Comment to Section 10502. For background on the provisions of this part, see the Comment to this part under the part heading.

§ 10535. Paying family allowance

Comment. Section 10535 continues Section 10535 of the repealed Probate Code without change. Concerning the exercise of powers described in this article, see Sections 10502 and 10530 and the Comments thereto. See also Section 10501 (matters requiring court supervision notwithstanding grant of independent administration authority). For provisions relating to payment of the family allowance, see Sections 6540-6545.

Although notice of proposed action is required for the first payment of a family allowance, the personal representative can continue to make the payment (without any increase) without giving notice of proposed action, except that another notice of proposed action is required if the family allowance is to be continued for a period commencing more than 12 months after the death of the decedent. Notice of proposed action also must be given if (1) there is to be an increase in the amount of the payment of a family allowance or (2) a family allowance is proposed to be paid to a person who previously has not been receiving a family allowance, even where notice of proposed action previously has been

given with reference to the payment of a family allowance to another person.

As to the application of this part where independent administration authority was granted under the repealed Probate Code, see Section 10406.

Background on Section 10535 of Repealed Code

Section 10535 was added by 1987 Cal. Stat. ch. 923 § 93. The first sentence of subdivision (a) of Section 10535 restated subdivision (m) of former Probate Code Section 591.6 (powers of personal representative) (repealed by 1987 Cal. Stat. ch. 923 § 35) without substantive change. The second sentence of subdivision (a) and subdivision (b) of Section 10535 restated subdivision (b)(7) of former Probate Code Section 591.3 (notice of proposed action required under some circumstances) (repealed by 1987 Cal. Stat. ch. 923 § 35) without substantive change. For background on the provisions of this part, see the Comment to this part under the part heading.

§ 10536. Leasing real and personal property

Comment. Section 10536 continues Section 10536 of the repealed Probate Code without change.

The first sentence of subdivision (a) makes clear that the personal representative is authorized to determine the period, rental or royalty, and other terms and conditions of the lease. For the comparable provision under supervised administration, see Sections 9940-9948. For the comparable provisions of the Trust Law, see Sections 16231, 16232.

Concerning the exercise of powers described in this article, see Sections 10502 and 10530 and the Comments thereto. See also Section 10501 (matters requiring court supervision notwithstanding grant of independent administration authority). As to the application of this part where independent administration authority was granted under the repealed Probate Code, see Section 10406.

If the lease gives the lessee the option to extend the lease beyond the one-year term, notice of proposed action is required. The option to extend is taken into account in determining the term of the lease for the purpose of subdivision (b). This is consistent with the rule governing personal property leases under supervised administration. See Section 9940.

Background on Section 10536 of Repealed Code

Section 10536 was added by 1987 Cal. Stat. ch. 923 § 93. Subdivision (a) superseded the portion of subdivision (a) of former Probate Code Section 591.6 (repealed by 1987 Cal. Stat. ch. 923 § 35) relating to leases. The second sentence of subdivision (a) and subdivision (b) restated subdivision (b)(4) of former Probate Code Section 591.3 (repealed by 1987 Cal. Stat. ch. 923 § 35) with the addition of a provision dealing specifically with a lease that gives the lessee the option to extend the term of the lease.

Subdivision (c) was a new provision that was consistent with prior law. Under prior law, a lease of personal property was governed by subdivision (b)(5) of former Section

591.3 (contracts other than leases of real property) (repealed by 1987 Cal. Stat. ch. 923 § 35), which was replaced by subdivisions (a) and (b) of Section 10532.

For background on the provisions of this part, see the Comment to this part under the part heading.

§ 10537. Selling or exchanging personal property

Comment. Section 10537 continues Section 10537 of the repealed Probate Code without change. For the comparable provisions under supervised administration, see Sections 9920 (exchanges), 10250-10264 (sales).

Concerning the exercise of powers described in this article, see Sections 10502 and 10530 and the Comments thereto. See also Section 10501 (matters requiring court supervision notwithstanding grant of independent administration authority). For a general provision concerning the power to sell property under independent administration, see Section 10503. Except in certain narrowly limited circumstances, independent administration authority may not be used for the sale of property to the personal representative or the personal representative's attorney or for the exchange of property of the estate for property of the personal representative or the personal representative's attorney. See Section 10501.

Notice of proposed action must be given for the sale or exchange of personal property. Exceptions to this requirement are set forth in subdivision (b) of Section 10537. See also Sections 10510, 10512 (notice of proposed action required for sale of decedent's unincorporated business).

Paragraph (2) of subdivision (b) authorizes the sale of certain over-the-counter stocks. No notice of sale is required, nor is court confirmation required, for the sale of these over-the-counter stocks under supervised administration. See Section 10200. Quotations for these over-the-counter stocks are published daily in newspapers. For the provision relating to supervised administration that is comparable to paragraph (1) of subdivision (b), see Section 10200.

The reference to Section 10259 in paragraph (3) of subdivision (b) makes clear that notice of proposed action is not required for the sale of personal property at public auction for cash.

The reference to Section 10202 in paragraph (3) of subdivision (b) makes clear that notice of proposed action is not required to sell security subscription or conversion rights when sold for cash. If rights are not sold for cash, Section 10537 requires that notice of proposed action be given for the sale. Under supervised administration, the sale of subscription rights for the purchase of securities is permitted without court supervision. See Section 10202. As to the sale or surrender for

redemption or conversion of securities under supervised administration, see Section 10200. As to the exercise of a security subscription or conversion right under independent administration authority, see Sections 10550 and 10561 (notice of proposed action not required).

Paragraph (4) of subdivision (b) makes clear that a security described in Section 10200 may be surrendered for redemption or conversion without giving notice of proposed action. Section 10200 governs the surrender of securities for redemption or conversion.

As to the application of this part where independent administration authority was granted under the repealed Probate Code, see Section 10406.

Background on Section 10537 of Repealed Code

Section 10537 was added by 1987 Cal. Stat. ch. 923 § 93. The section superseded portions of subdivisions (a) and (g) of former Probate Code Section 591.6 which related to sales or exchanges of personal property (powers of personal representative) and all of subdivision (b)(3) of former Probate Code Section 591.3 (notice of proposed action) (provisions repealed by 1987 Cal. Stat. ch. 923 § 35).

Subdivision (a) continued the general requirement of subdivision (b)(3) of former Section 591.3 (repealed by 1987 Cal. Stat. ch. 923 § 35) that notice of proposed action be given for the sale or exchange of personal property.

Paragraph (1) of subdivision (b) restated without substantive change an exception found in subdivision (b)(3) of former Section 591.3 (repealed by 1987 Cal. Stat. ch. 923 § 35). Paragraph (2) of subdivision (b) was new.

Paragraph (3) of subdivision (b) superseded the exception found in subdivision (b)(3) of former Section 591.3 (repealed by 1987 Cal. Stat. ch. 923 § 35) for assets referred to in former Probate Code Sections 770 and 771.5 (provisions repealed by 1987 Cal. Stat. ch. 923 § 39) when sold for cash. Paragraph (3) of subdivision (b) of Section 10537 expanded the exception provided under former Sections 770 and 771.5 to the extent indicated below:

(1) New Section 10259 (supervised administration) of the repealed Probate Code continued the substance of former Section 770 (perishable and other property) (repealed by 1987 Cal. Stat. ch. 923 § 39) which was referred to in former Section 591.3(b)(3), and the substance of the last sentence of former Probate Code Section 772 (personal property sold at public auction) (repealed by 1987 Cal. Stat. ch. 923 § 39) which was not referred to in subdivision (b)(3) of former Section 591.3 (repealed by 1987 Cal. Stat. ch. 923 § 35).

(2) Former Section 771.5 (repealed by 1987 Cal. Stat. ch. 923 § 39) was restated without substantive change in new Section 10202 of the repealed Probate Code.

Paragraph (4) of subdivision (b) was new.

For background on the provisions of this part, see the Comment to this part under the part heading.

§ 10538. Granting or extending exclusive right to sell property

Comment. Section 10538 continues Section 10538 of the repealed Probate Code without change.

Under paragraph (1) of subdivision (a), the personal representative may grant an exclusive right to sell to one broker; and, when that

exclusive right expires, grant another broker the exclusive right to sell the same property. The granting of the exclusive right to sell to the new broker is not an extension of the exclusive right to sell within the meaning of paragraph (2) or subdivision (c).

Paragraph (2) of subdivision (a) makes clear that the exclusive right to sell agreement can be extended, each extension being for a period not to exceed 90 days. This addition conforms the independent administration authority under Section 10538 to the supervised administration provision found in Section 10150(c).

Concerning the exercise of powers described in this article, see Sections 10502 and 10530 and the Comments thereto. See also Section 10501 (matters requiring court supervision notwithstanding grant of independent administration authority). For a general provision governing the manner of sale of property, see Section 10503. Notice of proposed action is required for (1) selling or exchanging real property and (2) selling or exchanging personal property (with certain exceptions). See Sections 10510, 10511, 10537.

Although notice of proposed action is not required in order to grant an exclusive right to sell property for a period not to exceed 90 days, or to extend the broker's exclusive right to sell so long as the total period does not exceed 270 days, the personal representative may give notice of proposed action if the personal representative so desires. See Section 10580(b).

The personal representative does not have the power to sell real property using independent administration procedures if the personal representative has limited authority. See Sections 10501(b). See also Sections 10403, 10450(b)(2), 10452 (limited authority).

As to the application of this part where independent administration authority was granted under the repealed Probate Code, see Section 10406.

Background on Section 10538 of Repealed Code

Section 10538 was added by 1987 Cal. Stat. ch. 923 § 93. Paragraph (1) of subdivision (a) restated subdivision (o) of former Probate Code Section 591.6 (repealed by 1987 Cal. Stat. ch. 923 § 35) without substantive change. Paragraph (2) of subdivision (a) was new. Subdivisions (b) and (c) were new.

The phrase "where necessary and advantageous to the estate" which was found in subdivision (o) of former Section 591.6 was omitted as unnecessary. The introductory clause of Section 10502 recognizes that the personal representative is required to exercise the power granted under this article to the extent that ordinary care and diligence requires that the power be exercised and may not exercise the power to the extent that ordinary care and diligence requires that the power not be exercised. See Section 9600(b). See also the Comment to Section 10502.

For background on the provisions of this part, see the Comment to this part under the part heading.

Article 4. Powers Exercisable Without Giving Notice of Proposed Action

§ 10550. Article describes powers that may be exercised without giving notice of proposed action

Comment. Section 10550 continues Section 10550 of the repealed Probate Code without change. This section permits the exercise of the powers described in this article without giving notice of proposed action under Chapter 4 (commencing with Section 10580). However, subdivision (b) of Section 10580 permits a personal representative to use the notice of proposed action procedure provided in Chapter 4 with respect to an action that the personal representative proposes to take even though the action is not one for which notice of proposed action is required. For example, the personal representative may want to proceed under Chapter 4 where the proposed action is the compromise of a claim by or against the estate (see Section 10552). This action is one that ordinarily does not require notice of proposed action. If the procedure provided by Chapter 4 is used with respect to the proposed action, the person who fails to object to the proposed action waives the right to have the court later review the action taken. See Section 10590 and the Comment thereto. See also Section 10589(b) and the Comment thereto. Use of the notice of proposed action procedure avoids the need to petition the court for instructions on the proposed compromise (unless there is an objection to the proposed action) in order to preclude a later challenge to the accounts of the personal representative.

The personal representative is required to exercise a power granted under this article to the extent that ordinary care and diligence requires that the power be exercised and may not exercise the power to the extent that ordinary care and diligence requires that the power not be exercised. See Section 9600(b). See also the Comment to Section 10502. As to the effect of court authorization or approval, see Section 7250. See also Section 10590 (court review of action taken pursuant to independent administration authority).

The decedent's will may limit the powers of the personal representative under this part. See Section 10502. As to the application of this part where independent administration authority was granted under the repealed Probate Code, see Section 10406.

Background on Section 10550 of Repealed Code

Section 10550 was added by 1987 Cal. Stat. ch. 923 § 93. For background on the provisions of this part, see the Comment to this part under the part heading.

§ 10551. Powers that any personal representative may exercise without court supervision

Comment. Section 10551 continues Section 10551 of the repealed Probate Code without change. Concerning the exercise of powers described in this chapter, see Sections 10502 and 10550 and the Comments thereto. Notice of proposed action is not required to exercise the power granted by Section 10551. See Section 10550.

The inclusion of Section 10551 makes it unnecessary to list in this article those powers that a personal representative not having independent administration authority can exercise without court supervision. This is the reason why some powers listed in former Probate Code Section 591.6 (repealed by 1987 Cal. Stat. ch. 923 § 35) of the repealed Probate Code are not listed in this article. Accordingly, the following powers listed in former Section 591.6 are not listed in this article: Power to vote a security, in person or by general or limited proxy (authorized without court supervision by Section 9655); power to insure estate and personal representative (authorized without court supervision by Section 9656). Section 10551 gives the personal representative who has been granted independent administration authority these powers as well as any other powers that can be exercised without court supervision by a personal representative who has not been granted independent administration authority.

As to the application of this part where independent administration authority was granted under the repealed Probate Code, see Section 10406.

Background on Section 10551 of Repealed Code

Section 10551 was added by 1987 Cal. Stat. ch. 923 § 93. The section superseded the phrase "in addition to any other powers granted by this code" which appeared in the introductory portion of former Probate Code Section 591.6 (repealed by 1987 Cal. Stat. ch. 923 § 35). For background on the provisions of this part, see the Comment to this part under the part heading.

§ 10552. Acting on claims against estate

Comment. Section 10552 continues Section 10552 of the repealed Probate Code without change. Concerning the exercise of powers described in this chapter, see Sections 10502 and 10550 and the Comments thereto. Subdivision (b) is comparable to Section 9830 (supervised administration). As to the payment of taxes, assessments, and other expenses incurred in the collection, care, and administration of the estate, see Section 10556. For provisions relating to claims, see Part 4 (commencing with Section 9000). See also Part 9 (commencing with Section 11400) (payment of debts).

Notice of proposed action is not required to exercise the power granted by Section 10552. See Section 10550 and the Comment thereto. Notice of proposed action is required (1) for determining third-party claims to real or personal property if the decedent died in possession of, or holding title to, the property and (2) for determining decedent's claim to real or personal property title to or possession of which is held by another. See Section 10518.

Except in certain narrowly limited circumstances, Section 10501 prohibits use of independent administration authority to:

(1) Compromise or settle a claim, action, or proceeding by the estate against the personal representative or the personal representative's attorney.

(2) Pay or compromise a claim of the personal representative against the estate or a claim of the personal representative's attorney against the estate, whether or not an action or proceeding is commenced on the claim.

Notwithstanding the granting of independent administration authority, the personal representative is required to obtain court supervision for allowance of compensation of the personal representative. See Section 10501.

As to the application of this part where independent administration authority was granted under the repealed Probate Code, see Section 10406.

Background on Section 10552 of Repealed Code

Section 10552 was added by 1987 Cal. Stat. ch. 923 § 93. Subdivision (a) restated the first clause of subdivision (j) of former Probate Code Section 591.6 (repealed by 1987 Cal. Stat. ch. 923 § 35) without substantive change. The words "by compromise," which appeared at the end of the first clause of subdivision (j) of former Section 591.6, were omitted at the end of subdivision (a) of Section 10552 because those words were unnecessary and their omission did not make a substantive change in the meaning of the provision. Subdivision (b) superseded a portion of the last clause of subdivision (j) of former Section 591.6. Subdivision (c) continued without change language found in the second clause of subdivision (j) of former Section 591.6. For background on the provisions of this part, see the Comment to this part under the part heading.

§ 10553. Commencing and defending actions and proceedings

Comment. Section 10553 continues Section 10553 of the repealed Probate Code without change. The language used in this section conforms to the language used in the provision relating to supervised administration. See Section 9820. The authority with respect to actions and proceedings is not limited and includes, for example, commencing, maintaining, or defending partition actions. See Section 9823 (supervised administration).

Concerning the exercise of powers described in this chapter, see Sections 10502 and 10550 and the Comments thereto. Notice of proposed action is not required to exercise the power granted by Section 10553. See Section 10550. Notice of proposed action is required for determining third-party claims to real or personal property if the decedent died in possession of, or holding title to, the property and for determining decedent's claim to real or personal property title to or possession of which is held by another. See Section 10518.

Except in certain narrowly limited circumstances, Section 10501 prohibits use of independent administration authority to:

(1) Compromise or settle a claim, action, or proceeding by the estate against the personal representative or the personal representative's attorney.

(2) Pay or compromise a claim of the personal representative or the personal representative's attorney against the estate, whether or not an action or proceeding is commenced on the claim.

As to the application of this part where independent administration authority was granted under the repealed Probate Code, see Section 10406.

Background on Section 10553 of Repealed Code

Section 10553 was added by 1987 Cal. Stat. ch. 923 § 93. The section restated without substantive change the portion of subdivision (j) of former Probate Code Section 591.6 (repealed by 1987 Cal. Stat. ch. 923 § 35) which authorized the personal representative to "institute" and "defend" actions and proceedings. For background on the provisions of this part, see the Comment to this part under the part heading.

§ 10554. Modifying terms of obligation

Comment. Section 10554 continues Section 10554 of the repealed Probate Code without change. For the comparable provision under supervised administration, see Section 9830(a)(2).

Concerning the exercise of powers described in this chapter, see Sections 10502 and 10550 and the Comments thereto. Notice of proposed action is not required to exercise the power granted by Section 10554. See Section 10550.

The power granted by Section 10554 is not limited to modifying the terms of an indebtedness owing to the decedent or the estate. It extends to the modification of the terms of an obligation as well. For example, if the lessee has an obligation (not involving the payment of money) to the estate under the terms of a lease (such as a requirement as to the hours of business of the lessee), Section 10554 authorizes the personal representative to modify that term of the lease, it being one of the terms of the obligation in favor of the estate.

Except in certain narrowly limited circumstances, independent administration authority may not be used to extend, renew, or modify the terms of a debt or other obligation of the personal representative or the personal representative's attorney owing to or in favor of the estate. Notwithstanding the granting of independent administration authority, the personal representative is required to obtain court supervision for allowance of compensation of the personal representative. See Section 10501.

As to the application of this part where independent administration authority was granted under the repealed Probate Code, see Section 10406.

Background on Section 10554 of Repealed Code

Section 10554 was a new provision added by 1987 Cal. Stat. ch. 923 § 93. For background on the provisions of this part, see the Comment to this part under the part heading.

§ 10555. Conveying property to effectuate a specific power

Comment. Section 10555 continues Section 10555 of the repealed Probate Code without change.

Concerning the exercise of powers described in this chapter, see Sections 10502 and 10550 and the Comments thereto. Under this part, there must be a specific power to act in the specific circumstances (such as the power to make a sale or exchange) in order to authorize the personal representative to execute a conveyance. Where the personal representative acts under one of these specific powers (and complies with the notice of proposed action procedure if notice of proposed action is required), Section 10555 gives the personal representative power to execute any conveyance that is necessary to effectuate the exercise of the specific power without giving notice of proposed action with respect to the execution of the conveyance.

Although notice of proposed action is not required to exercise the power granted by Section 10555 (see Section 10550), the personal representative may use the notice of proposed action procedure if the personal representative so desires. See Section 10580(b) and the Comment to Section 10550.

As to the application of this part where independent administration authority was granted under the repealed Probate Code, see Section 10406.

Background on Section 10555 of Repealed Code

Section 10555 was added by 1987 Cal. Stat. ch. 923 § 93. The section superseded the portion of subdivision (a) of former Probate Code Section 591.6 (repealed by 1987 Cal. Stat. ch. 923 § 35) that gave the personal representative the power to "convey" property. See the discussion in the Comment to Section 10551 concerning that portion

of former Section 591.6. For background on the provisions of this part, see the Comment to this part under the part heading.

§ 10556. Paying taxes, assessments, and expenses

Comment. Section 10556 continues Section 10556 of the repealed Probate Code without change. As to the payment of claims against the estate, see Section 10552. For provisions relating to payment of debts, expenses, and charges, see Part 9 (commencing with Section 11400). See also Section 10552 (compromise or settling claim against decedent, personal representative, or estate).

Concerning the exercise of powers described in this chapter, see Sections 10502 and 10550 and the Comments thereto. Notice of proposed action is not required to exercise the power granted by Section 10556. See Section 10550. But see Section 10501 (notwithstanding grant of independent administration authority, personal representative is required to obtain court supervision for allowance of compensation of the personal representative). Although notice of proposed action is not required to exercise the power described in Section 10556, the personal representative may use the notice of proposed action procedure if the personal representative so desires. See Section 10580(b) and the Comment to Section 10550.

As to the application of this part where independent administration authority was granted under the repealed Probate Code, see Section 10406.

Background on Section 10556 of Repealed Code

Section 10556 was added by 1987 Cal. Stat. ch. 923 § 93. The section restated subdivision (k) of former Probate Code Section 591.6 (repealed by 1987 Cal. Stat. ch. 923 § 35) without substantive change. For background on the provisions of this part, see the Comment to this part under the part heading.

§ 10557. Purchasing annuity granted in will

Comment. Section 10557 continues Section 10557 of the repealed Probate Code without change. For the comparable provision under supervised administration, see Section 9733. Concerning the exercise of powers described in this chapter, see Sections 10502 and 10550 and the Comments thereto. Notice of proposed action is not required to exercise the power granted by Section 10557. See Section 10550. But the personal representative may use the notice of proposed action procedure if the personal representative so desires. See Section 10580(b) and the Comment to Section 10550. As to the application of this part where independent administration authority was granted under the repealed Probate Code, see Section 10406.

Background on Section 10557 of Repealed Code

Section 10557 was a new provision added by 1987 Cal. Stat. ch. 923 § 93. For background on the provisions of this part, see the Comment to this part under the part heading.

§ 10558. Exercising option

Comment. Section 10558 continues Section 10558 of the repealed Probate Code without substantive change. For the comparable provision under supervised administration, see Section 9734. See also Section 10561 (exercising security subscription or conversion right under independent administration authority). Concerning the exercise of powers described in this chapter, see Sections 10502 and 10550 and the Comments thereto. Notice of proposed action is not required to exercise the power granted by Section 10558. See Section 10550. But the personal representative may use the notice of proposed action procedure if the personal representative so desires. See Section 10580(b) and the Comment to Section 10550. As to the application of this part where independent administration authority was granted under the repealed Probate Code, see Section 10406.

Background on Section 10558 of Repealed Code

Section 10558 was a new provision added by 1987 Cal. Stat. ch. 923 § 93. For background on the provisions of this part, see the Comment to this part under the part heading.

§ 10559. Purchasing securities or commodities sold short

Comment. Section 10559 continues Section 10559 of the repealed Probate Code without change. For the comparable provision under supervised administration, see Section 9735. Concerning the exercise of powers described in this chapter, see Sections 10502 and 10550 and the Comments thereto. Notice of proposed action is not required to exercise the power granted by Section 10559. See Section 10550. But the personal representative may use the notice of proposed action procedure if the personal representative so desires. See Section 10580(b) and the Comment to Section 10550. As to the application of this part where independent administration authority was granted under the repealed Probate Code, see Section 10406.

Background on Section 10559 of Repealed Code

Section 10559 was a new provision added by 1987 Cal. Stat. ch. 923 § 93. For background on the provisions of this part, see the Comment to this part under the part heading.

§ 10560. Holding securities in name of nominee or in other form

Comment. Section 10560 continues Section 10560 of the repealed Probate Code without change. For the comparable provision under supervised administration, see Section 9736. Concerning the exercise of

powers described in this chapter, see Sections 10502 and 10550 and the Comments thereto. Notice of proposed action is not required to exercise the power granted by Section 10560. See Section 10550. But the personal representative may use the notice of proposed action procedure if the personal representative so desires. See Section 10580(b) and the Comment to Section 10550. As to the application of this part where independent administration authority was granted under the repealed Probate Code, see Section 10406.

Background on Section 10560 of Repealed Code

Section 10560 was added by 1987 Cal. Stat. ch. 923 § 93. The section restated subdivision (h) of former Probate Code Section 591.6 (repealed by 1987 Cal. Stat. ch. 923 § 35), except that Section 10560 did not continue the provision of former Section 591.6 that made the personal representative "liable for any act of the nominee in connection with the security so held." The liability of the personal representative is now determined under Section 9600 which requires the personal representative to use ordinary care and diligence in managing and controlling the estate and not to exercise a power to the extent that ordinary care and diligence requires that the power not be exercised. See Section 9600 and the Comment thereto. See also Section 10502 and the Comment thereto. For background on the provisions of this part, see the Comment to this part under the part heading.

§ 10561. Exercising security subscription or conversion rights

Comment. Section 10561 continues Section 10561 of the repealed Probate Code without change. For the comparable provision under supervised administration, see Section 9737 (exercise of security subscription rights). As to the sale under independent administration authority of security subscription or conversion rights, see Section 10537 (notice of proposed action not required if sold for cash). Concerning the exercise of powers described in this chapter, see Sections 10502 and 10550 and the Comments thereto. Notice of proposed action is not required to exercise the power granted by Section 10561. See Section 10550. But the personal representative may use the notice of proposed action procedure if the personal representative so desires. See Section 10580(b) and the Comment to Section 10550. As to the application of this part where independent administration authority was granted under the repealed Probate Code, see Section 10406.

Background on Section 10561 of Repealed Code

Section 10561 was added by 1987 Cal. Stat. ch. 923 § 93. The section restated the substance of the portion of subdivision (g) of former Probate Code Section 591.6 (repealed by 1987 Cal. Stat. ch. 923 § 35) that related to the exercise of subscription or conversion rights with the expansion of the scope of the provision to cover "securities" instead of "stock." See Section 70 (defining "security"). For background on the provisions of this part, see the Comment to this part under the part heading.

§ 10562. Making repairs and improvements

Comment. Section 10562 continues Section 10562 of the repealed Probate Code without change. Concerning the exercise of powers described in this chapter, see Sections 10502 and 10550 and the Comments thereto. Notice of proposed action is not required to exercise the power granted by Section 10562. See Section 10550. But the personal representative may use the notice of proposed action procedure if the personal representative so desires. See Section 10580(b) and the Comment to Section 10550. As to the application of this part where independent administration authority was granted under the repealed Probate Code, see Section 10406.

Background on Section 10562 of Repealed Code

Section 10562 was added by 1987 Cal. Stat. ch. 923 § 93. The section restated subdivision (e) of former Probate Code Section 591.6 (repealed by 1987 Cal. Stat. ch. 923 § 35) without substantive change. The phrase "repairs and improvements to real and personal property of the estate" was substituted in Section 10562 for the language "make ordinary or extraordinary repairs or alterations in buildings or other property" which was used in former Section 591.6. The language "ordinary or extraordinary" was omitted because the distinction was irrelevant: Whether a repair or improvement should or should not be made does not depend on whether it is ordinary or extraordinary. The personal representative is required to exercise a power to the extent that ordinary care and diligence requires that the power be exercised and may not exercise the power to the extent that ordinary care and diligence requires that the power not be exercised. See Section 9600(b). See also the Comment to Section 10502. For background on the provisions of this part, see the Comment to this part under the part heading.

§ 10563. Accepting deed in lieu of foreclosure or trustee's sale

Comment. Section 10563 continues Section 10563 of the repealed Probate Code without change. For the comparable provision under supervised administration, see Section 9850. Concerning the exercise of powers described in this chapter, see Sections 10502 and 10550 and the Comments thereto. Notice of proposed action is not required to exercise the power granted by Section 10563. See Section 10550. But the personal representative may use the notice of proposed action procedure if the personal representative so desires. See Section 10580(b) and the Comment to Section 10550. As to the application of this part where independent administration authority was granted under the repealed Probate Code, see Section 10406.

Background on Section 10563 of Repealed Code

Section 10563 was a new provision added by 1987 Cal. Stat. ch. 923 § 93. For background on the provisions of this part, see the Comment to this part under the part heading.

§ 10564. Giving partial satisfaction of mortgage or partial reconveyance under trust deed

Comment. Section 10564 continues Section 10564 of the repealed Probate Code without change. For the comparable provision under supervised administration, see Section 9851. Concerning the exercise of powers described in this chapter, see Sections 10502 and 10550 and the Comments thereto. Notice of proposed action is not required to exercise the power granted by Section 10564. See Section 10550. But the personal representative may use the notice of proposed action procedure if the personal representative so desires. See Section 10580(b) and the Comment to Section 10550. As to the application of this part where independent administration authority was granted under the repealed Probate Code, see Section 10406.

Background on Section 10564 of Repealed Code

Section 10564 was a new provision added by 1987 Cal. Stat. ch. 923 § 93. For background on the provisions of this part, see the Comment to this part under the part heading.

§ 10565. Hiring and paying attorneys, advisers, and others

Comment. Section 10565 continues Section 10565 of the repealed Probate Code without change. The power granted by this section may be exercised whether or not independent administration authority is granted to the personal representative. See Section 10404.5. Section 10565 does not apply in any proceeding commenced before January 1, 1991. See Section 10406(c). As to the application of any amendments made after that date, see Section 3. For the comparable provisions under supervised administration, see Sections 9680-9684. Concerning the exercise of the powers described in this chapter, see Sections 10502 and 10550 and the Comments to those sections. Notice of proposed action is not required to exercise the power granted by Section 10565. See Section 10550. But the personal representative may use the notice of proposed action procedure if the personal representative so desires. See Section 10580(b) and the Comment to Section 10550. If notice of proposed action is given to a person who fails to object to the proposed action, that person waives the right to have the court later review the action. Section 10590. But see Section 10585.5 (another notice of proposed action required if compensation exceeds estimate in notice of proposed action).

Background on Section 10565 of Repealed Code

Section 10565 was a new provision added by 1990 Cal. Stat. [AB 831]. For background on the provisions of this part, see the Comment to this part under the part heading.

CHAPTER 4. NOTICE OF PROPOSED ACTION PROCEDURE

§ 10580. When notice of proposed action required or permitted

Comment. Section 10580 continues Section 10580 of the repealed Probate Code without substantive change.

Subdivision (b) permits a personal representative to use the notice of proposed action procedure provided in this article with respect to an action that the personal representative proposes to take even though the action is not one for which notice of proposed action is required. For example, the personal representative may want to proceed under subdivision (b) of Section 10580 where the proposed action is the compromise of a claim against the estate (see Section 10552). This action is one that ordinarily does not require notice of proposed action. See the Comment to Section 10550. If the procedure provided by this article is used with respect to the proposed action, the person who fails to object to the proposed action waives the right to have the court later review the action taken. See Section 10590 and the Comment thereto. See also Section 10589(b) and the Comment thereto. Use of the notice of proposed action procedure avoids the need to petition the court for instructions on the proposed compromise in order to preclude a later challenge to the accounts of the personal representative.

The personal representative need not take an action under independent administration authority even though authorized to do so; if the personal representative so desires, the action may be taken using the applicable court supervised administration procedure. See Section 10500(b) and the Comment to Section 10500.

The second sentence of subdivision (a) makes clear that if the personal representative has only limited authority, the mere fact that the power is listed in Chapter 3 (commencing with Section 10500) gives the personal representative no right or authority to exercise the power using the procedure provided in this chapter. See Section 10403 (limited authority does not include authority to sell, exchange, or grant an option to purchase real property or to borrow money with the loan secured by an encumbrance upon real property). Where the personal representative has only limited authority and does not have the power to take the proposed action under this part because the power to do so is not within the authority granted to the personal representative, the personal representative may exercise the power only pursuant to the provisions relating to court supervision, and the provisions of this part have no application to the transaction. See Sections 10501 and 10502 and the Comments thereto.

As to the application of this part where independent administration authority was granted under the repealed Probate Code, see Section 10406.

Background on Section 10580 of Repealed Code

Section 10580 was added by 1987 Cal. Stat. ch. 923 § 93. The first sentence of subdivision (a) restated paragraph (1) of subdivision (a) of former Probate Code Section 591.3 (repealed by 1987 Cal. Stat. ch. 923 § 35) without substantive change except that a reference to Chapter 3 (commencing with Section 10500) was substituted for the reference to subdivision (b) of former Section 591.3; Chapter 3 superseded subdivision (b) of former Section 591.3. The second sentence of subdivision (a) was a new provision that made no substantive change in prior law. Subdivision (b) was new. For background on the provisions of this part, see the Comment to this part under the part heading.

§ 10581. Persons to whom notice must be given

Comment. Section 10581 continues Section 10581 of the repealed Probate Code without substantive change. As to giving notice to known heirs and known devisees, see Section 1206. As to the application of this part where independent administration authority was granted under the repealed Probate Code, see Section 10406.

Background on Section 10581 of Repealed Code

Section 10581 was added by 1987 Cal. Stat. ch. 923 § 93. The section restated the introductory clause and paragraph (2) of subdivision (a) of former Probate Code Section 591.3 (repealed by 1987 Cal. Stat. ch. 923 § 35) with the following revisions:

(1) In subdivision (a) of Section 10581, "Each known devisee" was substituted for "the devisees and legatees." See Section 34 (defining "devisee").

(2) In subdivision (b) of Section 10581, "each known heir" was substituted for "the heirs" and language was added to make clear that notice of proposed action need be given only to heirs whose interest in the estate is affected by the proposed action.

(3) Language was added in subdivision (d) of Section 10581 to make clear that notice of proposed action need be given to the State of California only if its interest in the estate is affected by the proposed action.

For background on the provisions of this part, see the Comment to this part under the part heading.

§ 10582. Consent to proposed action

Comment. Section 10582 continues Section 10582 of the repealed Probate Code without change. This section provides a method that can be used to avoid the delay that otherwise would result from the requirement (see Sections 10586, 10587) that a person given notice of proposed action be allowed at least 15 days within which to object to the proposed action. Concerning the effect of a consent, see Section 10590. Concerning revocation of a consent, see Section 10584. As to the application of this part where independent administration authority was granted under the repealed Probate Code, see Section 10406.

Background on Section 10582 of Repealed Code

Section 10582 was added by 1987 Cal. Stat. ch. 923 § 93. The section restated subdivision (c) of former Probate Code Section 591.3 (repealed by 1987 Cal. Stat. ch. 923 § 35) without substantive change. For background on the provisions of this part, see the Comment to this part under the part heading.

§ 10583. Waiver of notice

Comment. Section 10583 continues Section 10583 of the repealed Probate Code with a revision in the introductory clause of subdivision (b) to require use of the Judicial Council Statutory Waiver of Notice of Proposed Action Form.

Subdivision (a) permits waiver of notice of proposed action only with respect to a particular proposed action. A person entitled to notice of proposed action may execute a written waiver under subdivision (a) that would, for example, permit notice of a particular proposed real property transaction to be given to the person by telephone so that the proposed action can be expeditiously completed if the person does not object. In such a case, if the person is agreeable to the sale of the real property, the waiver could be drafted in terms that would permit the personal representative to call the person on the telephone to notify the person of an offer to buy the property and to permit the sale of the property at the price and on the terms offered if the person called is agreeable or at a price and on the terms of a counter-offer that is agreeable to the person called.

Subdivision (b) applies when a Statutory Waiver of Notice of Proposed Action Form is used. Under subdivision (b), a person may, for example, execute the Judicial Council statutory waiver form to waive the right of notice of proposed action with respect to investing funds of the estate and borrowing money without waiving the right to notice of proposed action with respect to sales of real property. Or the person may waive the right to receive notice of proposed action with respect to any and all actions the personal representative might decide to take.

Concerning the effect of a waiver, see Section 10590. Concerning revocation of a waiver, see Section 10584. As to the application of this part where independent administration authority was granted under the repealed Probate Code, see Section 10406.

Background on Section 10583 of Repealed Code

Section 10583 was added by 1987 Cal. Stat. ch. 923 § 93. Subdivision (a) restated subdivision (d) of former Probate Code Section 591.3 (repealed by 1987 Cal. Stat. ch. 923 § 35) without substantive change. Subdivision (b) was new. For background on the provisions of this part, see the Comment to this part under the part heading.

§ 10584. Revocation of consent or waiver

Comment. Section 10584 continues Section 10584 of the repealed Probate Code without change. This section prescribes the requirements for revocation of a consent or waiver. Subdivision (b) permits, but does not require, a copy of the revocation to be filed with the court. Such a filing may be of some value in proving that the consent or waiver was revoked. As to the application of this part where independent administration authority was granted under the repealed Probate Code, see Section 10406.

Background on Section 10584 of Repealed Code

Section 10584 was a new provision added by 1987 Cal. Stat. ch. 923 § 93. For background on the provisions of this part, see the Comment to this part under the part heading.

§ 10585. Form and contents of notice of proposed action

Comment. Section 10585 continues Section 10585 of the repealed Probate Code without change. As to the application of this part where independent administration authority was granted under the repealed Probate Code, see Section 10406.

Background on Section 10585 of Repealed Code

Section 10585 was added by 1987 Cal. Stat. ch. 923 § 93. The section replaced the second, third, and fifth sentences of subdivision (a) of former Probate Code Section 591.4 and all of former Probate Code Section 591.8 (provisions repealed by 1987 Cal. Stat. ch. 923 § 35). Section 10585 made no change in former practice, but substituted subdivision (c) of Section 10585 for the statutory form set out in former Section 591.8 (repealed by 1987 Cal. Stat. ch. 923 § 35) which had been superseded by a Judicial Council form. For background on the provisions of this part, see the Comment to this part under the part heading.

§ 10585.5. Estimated amount of compensation to be included in notice of proposed action; copy of contract

Comment. Section 10585.5 continues Section 10585.5 of the repealed Probate Code without change. It governs the permissive notice of proposed action under Section 10565 with respect to the hiring and paying of attorneys, advisers, and others to advise or assist in the administration of the estate. The section requires that the notice of proposed action contain the information required by Section 10585 and, in addition, the information required by Section 10585.5. Section 10585.5 is designed to give the person receiving notice of proposed action sufficient information so that the person can determine whether or not to object to the proposed action. The section does not apply in a proceeding commenced before January 1, 1991. See Section 10406(c). As to the application of any amendments made after that date, see Section 3.

The notice of proposed action must include an estimate of the total amount of compensation to be paid to the person hired. Another notice of proposed action may be given if it appears that the total amount of compensation may exceed the amount estimated in a previous notice of proposed action. The provisions of Section 10590 that preclude court review of the hiring and paying of the agreed compensation will apply so long as the compensation does not exceed the amount estimated in the latest notice of proposed action. However, to the extent that the compensation paid or to be paid exceeds the amount estimated in the latest notice of proposed action, Section 10590 does not apply and the court may review the excess to determine whether it is reasonable.

Section 10585.5 also requires that a copy of the contract be provided with the notice of proposed action. In the case of an attorney, a copy of the written fee contract required by Section 6148 of the Business and Professions Code must be provided with the notice of proposed action.

Background on Section 10585.5 of Repealed Code

Section 10585.5 was a new provision added by 1990 Cal. Stat. [AB 831]. For background on the provisions of this part, see the Comment to this part under the part heading.

§ 10586. Mailing or delivery of notice

Comment. Section 10586 continues Section 10586 of the repealed Probate Code without change. As to the manner of mailing, see Section 1215. As to the application of this part where independent administration authority was granted under the repealed Probate Code, see Section 10406.

Background on Section 10586 of Repealed Code

Section 10586 was added by 1987 Cal. Stat. ch. 923 § 93. The section superseded the first and fourth sentences of subdivision (a) of former Probate Code Section 591.4 (repealed by 1987 Cal. Stat. ch. 923 § 35). Unlike former Section 591.4, the time is not extended under Section 10586 if the notice of proposed action is given by mail. The mailing is complete when the notice of proposed action is deposited in the mail. See Section 1215. For background on the provisions of this part, see the Comment to this part under the part heading.

§ 10587. Delivery or mailing of objection to proposed action

Comment. Section 10587 continues Section 10587 of the repealed Probate Code without change. This section applies whether the notice of proposed action is given pursuant to subdivision (a) of Section 10580 (giving of notice mandatory) or under subdivision (b) of that section (giving of notice permissive). See also Section 10590 (effect of failure to object).

Subdivision (a) permits a person not given notice of proposed action to object to the proposed action. For example, the personal representative

may for some reason fail to give notice of proposed action to a person entitled to the notice. The person may be informed of the proposed action by a relative who did receive a notice of proposed action. If the person entitled to the notice objects to the proposed action, the proposed action can be taken only under court supervision. See Section 10589. However, the person is not required to object to the proposed action in order to protect the right to have the court later review the action. Since the person was not given notice of proposed action, the person's right to have the court later review the proposed action is not affected. See Section 10590.

As an alternative to or in addition to objecting to the proposed action, a person who wants to prevent the proposed action from being taken other than under court supervision may apply for a restraining order under Section 10588.

As to the application of this part where independent administration authority was granted under the repealed Probate Code, see Section 10406.

Background on Section 10587 of Repealed Code

Section 10587 was added by 1987 Cal. Stat. ch. 923 § 93. The section restated subdivision (a)(2) of former Probate Code Section 591.5 (repealed by 1987 Cal. Stat. ch. 923 § 35) without substantive change. The second sentence of subdivision (b) was drawn from the last sentence of subdivision (b) of former Probate Code Section 591.8 (repealed by 1987 Cal. Stat. ch. 923 § 35). For background on the provisions of this part, see the Comment to this part under the part heading.

§ 10588. Restraining order

Comment. Section 10588 continues Section 10588 of the repealed Probate Code without change. This section applies whether the notice of proposed action is given pursuant to subdivision (a) of Section 10580 (giving of notice mandatory) or under subdivision (b) of that section (giving of notice permissive). See also Section 10590 (effect of failure to object).

Where notice of proposed action is mandatory (see subdivision (a) of Section 10580), a person who is entitled to notice of proposed action but has not been given notice of proposed action may nevertheless obtain a restraining order under Section 10588. See the discussion in the Comment to Section 10587. Where notice of proposed action is not required (see subdivision (b) of Section 10580), a person can obtain a restraining order under Section 10588 only if the person has been given notice of the proposed action. If other persons have been given a notice of proposed action under subdivision (b) of Section 10580 but the person who objects to the proposed action has not been given the notice, the person entitled to notice under Section 10581 can object to the proposed

action as provided in Section 10587 but may not obtain a restraining order under Section 10588.

As to the application of this part where independent administration authority was granted under the repealed Probate Code, see Section 10406.

Background on Section 10588 of Repealed Code

Section 10588 was added by 1987 Cal. Stat. ch. 923 § 93. The section restated subdivision (a)(1) of former Probate Code Section 591.5 (repealed by 1987 Cal. Stat. ch. 923 § 35) without substantive change except that Section 10588 made clear the time within which the order must be served on the personal representative and also recognized the new provision found in subdivision (b) of Section 10580. For background on the provisions of this part, see the Comment to this part under the part heading.

§ 10589. Court supervision and notice of hearing required if personal representative has notice of objection

Comment. Section 10589 continues Section 10589 of the repealed Probate Code with a revision in subdivision (b) to require that the personal representative petition under Section 9684 and obtain court approval before taking the proposed action if the proposed action involves the exercise of the powers granted by Section 10565 (hiring and paying attorneys, advisers, and others).

Where notice of proposed action is required, subdivision (a) requires that the proposed action be taken only under court supervision if the personal representative has notice of a written objection or a restraining order with respect to the proposed action. And, when the proposed action is taken under court supervision, all the requirements of the court supervised procedure apply to the same extent that they would apply if the personal representative had not been granted independent administration authority. See Section 10401 (defining "court supervision"). For example, except as provided in Sections 10301-10303, if the proposed action is the sale of real property, notice of sale must be published. See Section 10300.

Subdivision (a) applies not only to a case where notice of proposed action is required but also to a case where notice of proposed action is not required to be given for a proposed action that would require court supervision if independent administration authority had not been granted. See Section 10580(b) (personal representative may give notice of proposed action with respect to a proposed action that could be taken without giving notice of proposed action). If the personal representative elects to give notice of proposed action in such a case, even though not required, subdivision (a) permits the personal representative to take the proposed action only under court supervision if the personal

representative has notice of a written objection to the proposed action or of a restraining order issued with respect to the proposed action.

Subdivision (b) applies where the personal representative decides to give notice of proposed action in a case where the personal representative would be authorized to take the proposed action without court supervision even if the personal representative had not been granted independent administration authority. In such a case, if the personal representative has notice of a written objection to the proposed action or of a restraining order issued with respect to the proposed action, subdivision (b) requires that the proposed action be taken only after authorization by court order obtained in a proceeding (1) on a petition for instructions or (2) if the proposed action involves the exercise of the powers granted by Section 10565, on a petition under Section 9684 (court review of propriety of employment and compensation of person hired by personal representative).

The benefit of the procedure provided by subdivision (b) of Section 10580 and subdivisions (a) and (b) of Section 10589 is that the procedure permits a court review of the proposed action before it is taken if the personal representative has notice of an objection rather than having the objection first made after the action has been taken. For further discussion, see the Comment to Section 10580.

What are the consequences if the personal representative goes ahead with the proposed transaction without court supervision after the personal representative has notice of a written objection to the transaction? As far as the third party to the transaction is concerned, the third party is protected if the third party is a bona fide purchaser or a third person dealing in good faith with the personal representative who changes his or her position in reliance upon the action, conveyance, or transfer, without actual notice of the failure of the personal representative to comply with the court supervision requirements. See Section 10591. As far as the personal representative is concerned, there are two sanctions that would apply where the personal representative goes ahead with a transaction knowing that there is a written objection to the transaction. First, the personal representative can be surcharged if the personal representative violates the standard of ordinary care and diligence established by Section 9600. In view of the objection, the burden is on the personal representative to establish that the action taken satisfied the requirements of Section 9600. Second, taking an action without obtaining court supervision where there has been an objection to the proposed action is grounds for removal of the personal representative. See Section 10592 and the Comment thereto. If the objection was made by serving a

restraining order with respect to the proposed action, the personal representative also would be subject to sanctions for violation of the court order.

Subdivision (c) of Section 10589 requires that notice of hearing be given to a person who has made a written objection under Section 10587 or has served a restraining order under Section 10588. Subdivision (c) requires that notice of hearing be given of the hearing on a petition for instructions, or a petition under Section 9684, for an order authorizing a proposed action described in subdivision (b) as well as of a hearing on a petition for court authorization or confirmation of a proposed action described in subdivision (a).

As to the application of this part where independent administration authority was granted under the repealed Probate Code, see Section 10406.

Background on Section 10589 of Repealed Code

Section 10589 was added by 1987 Cal. Stat. ch. 923 § 93. Subdivision (a) restated the first sentence of subdivision (b) of former Probate Code Section 591.5 (repealed by 1987 Cal. Stat. ch. 923 § 35) without substantive change. Subdivision (b) was new. Subdivision (c) restated subdivision (e) of former Section 591.5 (repealed by 1987 Cal. Stat. ch. 923 § 35) without substantive change. For background on the provisions of this part, see the Comment to this part under the part heading.

§ 10590. Effect of failure to object to proposed action

Comment. Section 10590 continues Section 10590 of the repealed Probate Code without substantive change. The introductory portion of subdivision (c) has been rephrased to make clear that the person seeking review of the action of the personal representative must make a motion and establish the matters listed in the subdivision.

Section 10590 applies only where notice of proposed action was given as provided in Sections 10580-10586 or where the notice was waived or consent was given to the proposed action. See Sections 10585 (contents of notice), 10586 (delivery or mailing required). See also Sections 10582-10584 (waiver or consent). Subject to subdivision (c), only a person described in Section 10581 may obtain review of the action and then only if the person was not given a proper notice of proposed action and had not waived the notice or consented to the proposed action.

To satisfy the requirements of Section 10590, the notice must include a description of the proposed action in reasonably specific terms, with additional information if the proposed action involves a sale or exchange of real property or an option to purchase real property. See Section 10585.

Under Section 10590, a creditor who does not request special notice is not entitled to notice of proposed action (see Section 10581) and is not

entitled to obtain review of the action taken. A creditor who requests special notice pursuant to Section 1250 is entitled to notice of proposed action. See Section 10581(c).

Subdivision (c) deals with the case where the heir or devisee entitled to notice of proposed action lacked capacity to object to the proposed action or was a minor. Upon motion of the heir or devisee (or the legal representative of the heir or devisee if the heir or devisee lacks the capacity to make the motion), the court will review the proposed action if the matters established in paragraphs (1)-(4) of subdivision (c) are established. As to the right of a person having capacity who failed to object to the action to obtain court review, see subdivision (b).

Paragraph (2) of subdivision (a) and the introductory clause of subdivision (b) make clear that the court is not authorized to review the proposed action on motion of a person who consented to the proposed action (Section 10582) or waived the notice of proposed action (Section 10583). See the Comments to Sections 10582 and 10583. See also Section 10584 (revocation of consent or waiver).

A guardian ad litem can be appointed to object, waive, or consent to proposed actions under the Independent Administration of Estates Act where the person entitled to notice of proposed action lacks the capacity to act with respect to the proposed action. See Section 1003.

As to the application of this part where independent administration authority was granted under the repealed Probate Code, see Section 10406.

Background on Section 10590 of Repealed Code

Section 10590 was added by 1987 Cal. Stat. ch. 923 § 93. Subdivisions (a) and (b) restated the substance of the second sentence and a portion of the third sentence of subdivision (d) of former Probate Code Section 591.5 (repealed by 1987 Cal. Stat. ch. 923 § 35), but Section 10590 limited the right to obtain court review on the court's own motion. Subdivision (c) superseded the portion of the third sentence of subdivision (d) of former Section 591.5 which permitted the court to review the proposed action on its own motion. Subdivision (d) continued the substantive effect of the first sentence of subdivision (d) of former Section 591.5. For background on the provisions of this part, see the Comment to this part under the part heading.

§ 10591. Protection of persons dealing in good faith with personal representative

Comment. Section 10591 continues Section 10591 of the repealed Probate Code without change. As to the application of this part where independent administration authority was granted under the repealed Probate Code, see Section 10406.

Background on Section 10591 of Repealed Code

Section 10591 was added by 1987 Cal. Stat. ch. 923 § 93. The section restated subdivision (b) of former Probate Code Section 591.4 and subdivision (c) of former

Probate Code Section 591.5 (provisions repealed by 1987 Cal. Stat. ch. 923 § 35) without substantive change. For background on the provisions of this part, see the Comment to this part under the part heading.

§ 10592. Failure of personal representative to satisfy statutory requirements grounds for removal from office

Comment. Section 10592 continues Section 10592 of the repealed Probate Code without substantive change. The court has discretion whether to remove the personal representative. In determining whether to remove the personal representative, the court should consider all the circumstances of the particular case. Among the significant considerations are whether the personal representative violated the statute with the intent to deprive the person entitled to notice of his or her rights or whether the failure was inadvertent or merely negligent. As to the application of this part where independent administration authority was granted under the repealed Probate Code, see Section 10406.

Background on Section 10592 of Repealed Code

Section 10592 was added by 1987 Cal. Stat. ch. 923 § 93. The section was drawn from the last sentence of subdivision (b) of former Probate Code Section 591.5 (repealed by 1987 Cal. Stat. ch. 923 § 35). Section 10592 expanded the provision of former law to permit removal from office for failure to give notice of proposed action as required by this chapter. For background on the provisions of this part, see the Comment to this part under the part heading.

PART 7. COMPENSATION OF PERSONAL REPRESENTATIVE

Comment. This part supersedes Part 7 (commencing with Section 10800) of Division 7 of the repealed Probate Code. The superseded part was enacted upon recommendation of the California Law Revision Commission. See *Recommendations Relating to Probate Law: Hiring and Paying Attorneys, Advisors, and Others; Compensation of Personal Representative,* 20 Cal. L. Revision Comm'n Reports 31 (1990); *Communication from the California Law Revision Commission Concerning Assembly Bill 831,* 20 Cal. L. Revision Comm'n Reports ___ (1990).

CHAPTER 1. AMOUNT OF COMPENSATION

§ 10800. Compensation for ordinary services

Comment. Section 10800 continues Section 10800 of the repealed Probate Code without change. As to the law applicable to a proceeding commenced before January 1, 1991, see Section 10850. As to the application of any amendments made after that date, see Section 3.

Compensation is computed using the total amount of the appraisal of property in the inventory (see Sections 8800-8802, 8850, 8900), plus gains over the appraisal value on sales, plus receipts, less losses from the appraisal value on sales, without reference to encumbrances or other obligations on estate property. Property is appraised at its fair market value at the time of the decedent's death. See Section 8802. The amount of any liens or encumbrances on the property is not subtracted from the fair market value used for the purpose of computing the compensation under this section.

A court order allowing the compensation to the personal representative is required before the compensation may be paid, and the compensation allowed is paid out of funds of the estate. See Sections 10830, 10831. As to allowing a portion of the compensation of the personal representative (on account of services rendered up to the time of allowance), see Section 10830. See also Section 12205 (reduction of compensation for delay in closing estate administration).

The personal representative may employ or retain experts, technical advisers, and others to assist in the performance of the duties of the office. As to when these persons may be paid out of funds of the estate and when they must be paid out of the personal representative's own funds, see Section 9683. As to the right of an attorney to receive dual compensation for services as personal representative and as estate attorney, see Section 10804.

Under the introductory clause of Section 10800, the section is subject to Section 10802. Section 10802 provides that, if the decedent's will makes provision for the compensation of the personal representative and the court does not relieve the personal representative from those provisions, the compensation provided by the will shall be the full and only compensation for the services of the personal representative. See also the discussion in the Comment to Section 10802.

Background on Section 10800 of Repealed Code

Section 10800 was added by 1990 Cal. Stat. [AB 831]. Subdivision (a) restated the first sentence of former Probate Code Section 901 (repealed by 1990 Cal. Stat. [AB 831]) without substantive change. Subdivision (b) restated the first sentence of the second paragraph of former Probate Code Section 901 without substantive change.

Section 10800 did not continue the last sentence of former Probate Code Section 901. Before 1965, the usual practice was to use gross value of real property to calculate the statutory fee unless the property was sold during probate, in which case only the decedent's equity in the property was used. Under the 1965 revision to former Probate Code Section 901 (amended 1965 Cal. Stat. ch. 115), gross value was used, whether or not a sale had taken place. See Review of Selected 1965 Code Legislation 222 (Cal. Cont. Ed. Bar 1965). Subdivision (b) of Section 10800 continued the substance of the 1965 revision. The last sentence of former Section 901 was included in 1965 to make clear that the former practice was being changed; it was no longer necessary to continue this sentence.

For background on the provisions of this part, see the Comment to this part under the part heading.

§ 10801. Additional compensation for extraordinary services

Comment. Section 10801 continues Section 10801 of the repealed Probate Code without change. See also Section 12205 (reduction of compensation for delay in closing estate administration). As to the law applicable to a proceeding commenced before January 1, 1991, see Section 10850. As to the application of any amendments made after that date, see Section 3.

Even though services are extraordinary, the court has discretion whether or not to award compensation for them. Estate of Walker, 221 Cal. App. 2d 792, 795-96, 34 Cal. Rptr. 832 (1963) (extraordinary services by executor and estate attorney).

Under Sections 10800 and 10801, the following services by the personal representative may be considered as extraordinary:

(1) Sales or mortgages of real or personal property. Estate of McSweeney, 123 Cal. App. 2d 787, 798, 268 P.2d 107 (1954) (extraordinary fees of executor and estate attorney).

(2) Carrying on decedent's business. Estate of King, 19 Cal. 2d 354, 358-60, 121 P.2d 716 (1942) (extraordinary fees of executrix); Estate of Scherer, 58 Cal. App. 2d 133, 136 P.2d 103 (1943) (extraordinary fees of

executor); In re Estate of Allen, 42 Cal. App. 2d 346, 353, 108 P.2d 973 (1941) (extraordinary fees of administratrix and estate attorney).

(3) Court proceedings to determine testator's intention concerning undisclosed beneficiaries. Estate of Feldman, 78 Cal. App. 2d 778, 793-94, 178 P.2d 498 (1947) (extraordinary fees of executor and estate attorney).

(4) Defense of personal representative's account (answering interrogatories; attending depositions; conferring with attorneys to prepare for depositions, interrogatories, and trial; attending trial). Estate of Beach, 15 Cal. 3d 623, 644-45, 542 P.2d 994, 125 Cal. Rptr. 570 (1975), cert. denied, 434 U.S. 1046 (1978) (extraordinary fees of executor and estate attorney).

(5) Securing a loan to pay debts of the estate. In re Estate of O'Connor, 200 Cal. 646, 651, 254 P. 269 (1927) (extraordinary fees of executor and estate attorney).

The foregoing is not an exhaustive list. Other extraordinary services are or may in the future be added to this list by case law or court rule. See generally Feinfield, *Fees and Commissions,* in 2 California Decedent Estate Practice § 20.28 (Cal. Cont. Ed. Bar, Feb. 1989); Los Angeles County Probate Policy Memorandum § 15.08, reprinted in California Local Probate Rules (10th ed. Cal. Cont. Ed. Bar 1989).

Under the introductory clause of Section 10801, the section is subject to the provisions of this part. Thus, for example, Section 10801 is subject to Section 10802. Section 10802 provides that, if the decedent's will makes provision for the compensation of the personal representative and the court does not relieve the personal representative from those provisions, the compensation provided by the will shall be the full and only compensation for the services of the personal representative. See also the discussion in the Comment to Section 10802. Likewise, Section 10801 is subect to Section 10804. Section 10804 provides that, unless expressly authorized by the decedent's will, a personal representative who is an attorney may not receive compensation for services as estate attorney.

Background on Section 10801 of Repealed Code

Section 10801 was added by 1990 Cal. Stat. [AB 831]. Section 10801 restated the first sentence of former Probate Code Section 902 (repealed by 1990 Cal. Stat. [AB 831]) without substantive change.

The listing in former Probate Code Section 902 of examples of what constituted extraordinary services was not continued in Section 10801. The former list was incomplete. See Estate of Buchman, 138 Cal. App. 2d 228, 236, 291 P.2d 547 (1955) (special administrator and estate attorney). Omission of the list was not intended to change the law.

For background on the provisions of this part, see the Comment to this part under the part heading.

§ 10802. Compensation provided by decedent's will

Comment. Section 10802 continues Section 10802 of the repealed Probate Code without change. As to the law applicable to a proceeding commenced before January 1, 1991, see Section 10850. As to the application of any amendments made after that date, see Section 3.

Subdivision (a) gives the testator the ability to provide for alternative methods of compensation in the will. For example, the will can eliminate the distinction between ordinary and extraordinary services and substitute an hourly rate or rates for the various services to be provided by the personal representative. The statutory compensation provisions are thus default provisions that apply where the will does not make provision for the compensation of the personal representative. Subdivision (a) also permits the personal representative to receive a greater amount of compensation than the statutory compensation if the decedent's will makes provision for the greater amount of compensation. Cf. Estate of Van Every, 67 Cal. App. 2d 164, 153 P.2d 614 (1944) ($4,000 bequest to attorney in lieu of $1,696.33 statutory fee).

The remainder of the section is comparable to Section 9682 (compensation of persons hired by personal representative). See also the Comment to Section 9682.

For general provisions, see Sections 1000-1004 (rules of practice), 1020-1023 (petitions and other papers), 1040-1050 (hearings and orders). For general provisions relating to notice of hearing, see Sections 1200-1220. See also Sections 1206 (notice to known heirs or devisees), 1215-1217 (mailing in general), 1250-1252 (request for special notice), 1260-1265 (proof of giving notice). The court for good cause may dispense with the notice otherwise required to be given pursuant to this section. See Section 1220(c).

Background on Section 10802 of Repealed Code

Section 10802 was added by 1990 Cal. Stat. [AB 831]. Subdivision (a) of the section restated a portion of former Section 900 (repealed by 1990 Cal. Stat. [AB 831]) without substantive change. The remainder of the section superseded the portions of former Probate Code Sections 900 and 901 (provisions repealed by 1990 Cal. Stat. [AB 831]) that permitted the personal representative to renounce the compensation provided by the will. The former ability to renounce the compensation provided by the will was replaced by a new requirement that court approval be obtained for the personal representative to receive greater compensation than provided under the will.

For background on the provisions of this part, see the Comment to this part under the part heading.

§ 10803. Agreement for higher compensation void

Comment. Section 10803 continues Section 10803 of the repealed Probate Code without change. This section applies to compensation for both ordinary and extraordinary services. Nothing prevents the personal representative from waiving all compensation or agreeing to take less than the statutory compensation. See In re Estate of Marshall, 118 Cal. 379, 381, 50 P. 540 (1897) (statutory compensation allowed when evidence of alleged agreement for lower compensation was insufficient). See also Feinfield, *Fees and Commissions,* in 2 California Decedent Estate Practice § 20.5 (Cal. Cont. Ed. Bar, Feb. 1989). As to the law applicable to a proceeding commenced before January 1, 1991, see Section 10850. As to the application of any amendments made after that date, see Section 3.

Background on Section 10803 of Repealed Code

Section 10803 was added by 1990 Cal. Stat. [AB 831]. Section 10803 restated former Probate Code Section 903 (repealed by 1990 Cal. Stat. [AB 831]) without substantive change. For background on the provisions of this part, see the Comment to this part under the part heading.

§ 10804. No compensation as estate attorney unless authorized by will or court order

Comment. Section 10804 continues Section 10804 of the repealed Probate Code without change. The term "estate attorney" is to be given a broad meaning for the purposes of this section and includes the associates, partners, and attorneys of counsel with the law firm of the attorney retained by the personal representative as estate attorney, and also associates, partners, and attorneys of counsel with other law firms associated in the estate proceeding with the firm of the attorney retained by the personal representative as estate attorney, if the personal representative will share in the compensation that would be paid to the law firm. See also In re Estate of Parker, 200 Cal. 132, 251 P. 907 (1926). As to the law applicable to a proceeding commenced before January 1, 1991, see Section 10850. As to the application of any amendments made after that date, see Section 3.

Background on Section 10804 of Repealed Code

Section 10804 was added by 1990 Cal. Stat. [AB 831]. Section 10804 codified the general case law rule that the personal representative cannot serve as the estate attorney and receive dual compensation. See In re Estate of Parker, 200 Cal. 132, 251 P. 907 (1926); Estate of Downing, 134 Cal. App. 3d 256, 184 Cal. Rptr. 511 (1982); Estate of Haviside, 102 Cal. App. 3d 365, 368-69, 162 Cal. Rptr. 393 (1980). The provision that dual compensation may be paid if expressly authorized by the decedent's will also codified case law. See Estate of Thompson, 50 Cal. 2d 613, 328 P.2d 1 (1958); Estate of Crouch, 240 Cal. App. 2d 801, 49 Cal. Rptr. 926 (1966). See generally Feinfield, *Fees and Commissions,* in 2 California Decedent Estate Practice

§§ 20.10-20.12 (Cal. Cont. Ed. Bar, Feb. 1989). The provision that the court may authorize dual compensation by court order was new.

For background on the provisions of this part, see the Comment to this part under the part heading.

§ 10805. Apportionment of compensation

Comment. Section 10805 continues Section 10805 of the repealed Probate Code without change. As to the law applicable to a proceeding commenced before January 1, 1991, see Section 10850. As to the application of any amendments made after that date, see Section 3.

Background on Section 10805 of Repealed Code

Section 10805 was added by 1990 Cal. Stat. [AB 831]. Section 10805 restated the second sentence of former Probate Code Section 901 (repealed by 1990 Cal. Stat. [AB 831]) without substantive change, with the addition of the reference to an agreement between the personal representatives concerning apportionment of their compensation. The added language was drawn from Probate Code Section 8547 (division of compensation between special administrator and general personal representative). For background on the provisions of this part, see the Comment to this part under the part heading.

CHAPTER 2. ALLOWANCE OF COMPENSATION BY COURT

§ 10830. Partial allowance of compensation

Comment. Section 10830 continues Section 10830 of the repealed Probate Code without change. As to the priority for payment, see Section 11420. As to the law applicable to a proceeding commenced before January 1, 1991, see Section 10850. As to the application of any amendments made after that date, see Section 3.

For general provisions, see Sections 1000-1004 (rules of practice), 1020-1023 (petitions and other papers), 1040-1050 (hearings and orders). For general provisions relating to notice of hearing, see Sections 1200-1220. See also Sections 1206 (notice to known heirs or devisees), 1215-1217 (mailing in general), 1250-1252 (request for special notice), 1260-1265 (proof of giving notice). The court for good cause may dispense with the notice otherwise required to be given to a person under Section 10830. See Section 1220(c). For a limitation on the court's authority to award a partial allowance of fees for extraordinary services, see Section 10832. See also Sections 8547 (compensation of special administrator), 10954(c) (final report to show compensation), 12205 (reduction of compensation for delay in closing estate administration). See also Section 52 (defining "letters").

Background on Section 10830 of Repealed Code

Section 10830 was added by 1990 Cal. Stat. [AB 831]. Section 10830 restated the substance of former Probate Code Section 904 (repealed by 1990 Cal. Stat. [AB 831]).

For background on the provisions of this part, see the Comment to this part under the part heading.

§ 10831. Final compensation

Comment. Section 10831 continues Section 10831 of the repealed Probate Code without change. Final compensation is not to be paid until there is a final account and a final distribution. As to the priority for payment, see Section 11420. As to the law applicable to a proceeding commenced before January 1, 1991, see Section 10850. As to the application of any amendments made after that date, see Section 3.

For general provisions, see Sections 1000-1004 (rules of practice), 1020-1023 (petitions and other papers), 1040-1050 (hearings and orders). For general provisions relating to notice of hearing, see Sections 1200-1220. See also Sections 1206 (notice to known heirs or devisees), 1215-1217 (mailing in general), 1250-1252 (request for special notice), 1260-1265 (proof of giving notice). See also Sections 8547 (compensation of special administrator), 10954(c) (final report to show compensation), 12205 (reduction of compensation for delay in closing estate administration).

Background on Section 10831 of Repealed Code

Section 10831 was a new provision added by 1990 Cal. Stat. [AB 831]. Section 10831 was a new provision drawn from Probate Code Section 10830 and was in accord with existing practice. See Feinfield, *Fees and Commissions*, in 2 California Decedent Estate Practice § 20.34 (Cal. Cont. Ed. Bar, Feb. 1989). For background on the provisions of this part, see the Comment to this part under the part heading.

§ 10832. Limitation on allowance of compensation for extraordinary services

Comment. Section 10832 continues Section 10832 of the repealed Probate Code without change. In some cases, present payment will benefit the estate. For example, compensation may be allowed near the end of a tax year to absorb estate income so that the income will not be taxable. Partial payment also may be allowed at any time during the year if good cause is shown. As to the law applicable to a proceeding commenced before January 1, 1991, see Section 10850. As to the application of any amendments made after that date, see Section 3.

Background on Section 10832 of Repealed Code

Section 10832 was a new provision added by 1990 Cal. Stat. [AB 831]. Section 10832 was drawn from local court rules. See Lake County Probate Rules § 13.4(g); Marin County Rules of Probate Practice § 1204; Merced County Probate Rules § 1108; Orange County Probate Policy Memorandum § 8.04; Riverside County Probate Policy Memoranda § 6.1004; Sacramento County Probate Policy Manual § 708; San Bernardino County Probate Rules § 906; San Francisco Probate Manual § 13.03(a); San Mateo County Probate Rules, Rule 486(a); Santa Clara County Probate Rules § 9.5; Santa Cruz County Probate Rules § 405; Stanislaus County Probate Policy

Manual § 1008(b); Tuolumne County Probate Rules, Rule 12.11(e); Probate Rules of Third District Superior Courts, Rule 12.12(E), reprinted in Local Probate Rules (10th ed. Cal. Cont. Ed. Bar 1989).

For background on the provisions of this part, see the Comment to this part under the part heading.

CHAPTER 3. APPLICATION OF PART

§ 10850. Application of provisions of this part

Comment. Section 10850 continues Section 10850 of the repealed Probate Code without substantive change. Section 10850 limits the application of this part to proceedings commenced on or after January 1, 1991. Thus, for example, the allowance of compensation of the personal representative in a proceeding commenced before January 1, 1991, is governed by the applicable law in effect before January 1, 1991. See former Prob. Code §§ 900-904 (repealed by 1990 Cal. Stat. [AB 831]) (compensation of personal representative). As to the application of any amendments made after that date, see Section 3.

Likewise, conforming revisions made 1990 Cal. Stat. [AB 831] in Sections 7623, 7662, 7666, 8547, 9651, 10900, 10954, 11003, and 12205 do not apply in any proceeding for administration of a decedent's estate commenced before January 1, 1991. These sections, as they existed before their amendment by 1990 Cal. Stat. [AB 831], continue to apply in a proceeding commenced before January 1, 1991, notwithstanding their amendment. Former Sections 900, 901, 902, 903, 904, 910, and 911 (repealed by 1990 Cal. Stat. [AB 831]) continue to apply in any proceeding commenced before January 1, 1991, notwithstanding their repeal. See 1990 Cal. Stat. [AB 831] [last section of bill].

Background on Section 10850 of Repealed Code

Section 10850 was added by 1990 Cal. Stat. [AB 831]. For background on the provisions of this part, see the Comment to this part under the part heading.

PART 8. ACCOUNTS

Comment. This part supersedes Part 8 (commencing with Section 10900) of Division 7 of the repealed Probate Code. The superseded part was enacted upon recommendation of the California Law Revision Commission. See *Recommendation Relating to Accounts,* 19 Cal. L. Revision Comm'n Reports 877 (1988). See also *Communication from the California Law Revision Commission Concerning Assembly Bill 2841,* 19 Cal. L. Revision Comm'n Reports 1201, 1241-42 (1988); *Communication from the California Law Revision Commission Concerning Assembly Bill 158,* 20 Cal. L. Revision Comm'n Reports 235, 242 (1990); *Communication from the California Law Revision*

Commission Concerning Assembly Bill 831, 20 Cal. L. Revision Comm'n Reports ___ (1990).

CHAPTER 1. GENERAL PROVISIONS

§ 10900. Contents of account

Comment. Section 10900 continues Section 10900 of the repealed Probate Code without change. See also Sections 9657 (personal representative not to profit from increase, nor to suffer loss from decrease or destruction of estate without fault), 9839 (paying claim for less than its full amount), 10005 (sale for more or less than appraised value).

Section 10900 does not apply in any proceeding for administration of a decedent's estate commenced before January 1, 1991. See Section 900. As to the law applicable in a proceeding commenced before January 1, 1991, see Section 900. As to the application of any amendments made after that date, see Section 3.

Subdivision (b) is based on concepts developed in Note, *California Probate Accounting Procedures,* 39 S. Cal. L. Rev. 316 (1966). In the financial statement, each schedule should contain a breakdown of the summary item into its component parts. For instance, the summary item of receipts might be broken down into the totals of interest income, dividend income, royalties received, and miscellaneous receipts. The exact breakdown will vary, depending on the nature of the estate. It would be unnecessary to show in the summary item more than the total amount of each component part making up the total. For illustrative material, see National Fiduciary Accounting Standards Project: Uniform Fiduciary Accounting Principles and Model Accounting Formats, in 9 Probate Notes 224-47 (American College of Probate Counsel 1984).

Since the purpose of the report of administration (subdivisions (c) and (d)) is to provide a complete summary of the estate's administration, additional statements may be necessary in order to clarify certain events or circumstances and to permit interested persons to understand the report. In certain instances, the report of administration may include such information as a statement that cash was invested in interest-bearing accounts or other proper investments (Section 9652). If a final account is waived, the final report of administration must include the amount of the compensation paid or payable to the personal representative and must set forth the basis for determining the amount of the compensation. See Section 10954(c). See also Section 10831 (request for compensation may be included in the final account).

Likewise, the financial statement must include the information required by this section. This section does not, however, preclude a financial statement from including any other relevant information, such

as a separate statement of account as to specific gifts, allocation of principal and income, taxable income and distributable net income, and current values of property in the estate.

Background on Section 10900 of Repealed Code

Section 10900 was added by 1988 Cal. Stat. ch. 1199 § 91. The section superseded former Probate Code Section 920.3 and the first sentence of former Probate Code Section 921 (provisions repealed by 1988 Cal. Stat. ch. 1199 § 54.5). Section 10900 was amended by 1990 Cal. Stat. [AB 831] to require the report of administration to include a report concerning the hiring and payment of any persons hired under Section 9680 (persons hired to assist personal representative, including attorneys, accountants, auditors, technical advisers, and investment advisers). See *Recommendations Relating to Probate Law: Hiring and Paying Attorneys, Advisors, and Others; Compensation of Personal Representative*, 20 Cal. L. Revision Comm'n Reports 31 (1990). For background on the provisions of this part, see the Comment to this part under the part heading.

§ 10901. Production of supporting documents

Comment. Section 10901 continues Section 10901 of the repealed Probate Code without change.

Background on Section 10901 of Repealed Code

Section 10901 was added by 1988 Cal. Stat. ch. 1199 § 91. The section superseded former Probate Code Section 925 (repealed by 1988 Cal. Stat. ch. 1199 § 54.5), extending the voucher procedure to supporting documents generally. For background on the provisions of this part, see the Comment to this part under the part heading.

§ 10902. Procedure on account

Comment. Section 10902 continues Section 10902 of the repealed Probate Code without substantive change.

Background on Section 10902 of Repealed Code

Section 10902 was added by 1989 Cal. Stat. ch. 21 § 26. See *Communication from the California Law Revision Commission Concerning Assembly Bill 156*, 20 Cal. L. Revision Comm'n Reports 227, 231 (1990).

CHAPTER 2. WHEN ACCOUNT REQUIRED

§ 10950. Court-ordered account

Comment. Section 10950 continues Section 10950 of the repealed Probate Code without change. This section is subject to Section 10954 (when account is not required). For general provisions, see Sections 1000-1004 (rules of practice), 1020-1023 (petitions and other papers), 1040-1050 (hearings and orders). For general provisions relating to notice of hearing, see Sections 1200-1220. See also Sections 1215-1217 (mailing in general), 1250-1252 (request for special notice), 1260-1265 (proof of giving notice).

Background on Section 10950 of Repealed Code

Section 10950 was added by 1988 Cal. Stat. ch. 1199 § 91. The section superseded portions of the first sentences of former Probate Code Sections 921 and 922

(provisions repealed by 1988 Cal. Stat. ch. 1199 § 54.5). For background on the provisions of this part, see the Comment to this part under the part heading.

§ 10951. Final account

Comment. Section 10951 continues Section 10951 of the repealed Probate Code without change. This section is consistent with Section 11640 (petition and order for final distribution). The section is subject to Section 10954 (when account is not required). It should be noted that a supplemental account may be required under Section 11642 (after-acquired or after-discovered property). The liability of a personal representative whose office is vacant, and of surety on bond, continues until settlement of accounts and delivery of all of the estate to successor personal representative or other person appointed by the court to receive it. See Section 8525. See also Section 10831 (request for compensation may be included in the final account).

Background on Section 10951 of Repealed Code

Section 10951 was added by 1988 Cal. Stat. ch. 1199 § 91. The section superseded the second sentence of former Probate Code Section 922 (repealed by 1988 Cal. Stat. ch. 1199 § 54.5). For background on the provisions of this part, see the Comment to this part under the part heading.

§ 10952. Account after authority terminated

Comment. Section 10952 continues Section 10952 of the repealed Probate Code without change. This section is subject to Section 10954 (when account is not required). For an account where the personal representative dies, absconds, or becomes incapacitated, see Section 10953.

Background on Section 10952 of Repealed Code

Section 10952 was added by 1988 Cal. Stat. ch. 1199 § 91. The section superseded former Probate Code Section 923 (repealed by 1988 Cal. Stat. ch. 1199 § 54.5). For background on the provisions of this part, see the Comment to this part under the part heading.

§ 10953. Account where personal representative dies, absconds, or becomes incapacitated

Comment. Section 10953 continues Section 10953 of the repealed Probate Code without substantive change. The court referred to in this section is the court in which the estate of the original decedent is being administered.

Background on Section 10953 of Repealed Code

Section 10953 was added by 1988 Cal. Stat. ch. 1199 § 91. The section restated former Probate Code Section 932 (repealed by 1988 Cal. Stat. ch. 1199 § 54.5) with changes for internal consistency. For background on the provisions of this part, see the Comment to this part under the part heading.

§ 10954. When account is not required

Comment. Section 10954 continues Section 10954 of the repealed Probate Code without change. This section does not apply in any proceeding for administration of a decedent's estate commenced before January 1, 1991. See Section 900. As to the law applicable in a proceeding commenced before January 1, 1991, see Section 900. As to the application of any amendments made after that date, see Section 3.

Section 10954 supersedes local court rules. The section applies notwithstanding any other provision of this part, including but not limited to Section 10950 (court-ordered account).

Under paragraph (2) of subdivision (b), a waiver may be made on behalf of a minor by the minor's parent or guardian of the estate. The minor's parent or guardian of the estate is the person authorized to receive money or property belonging to the minor. See Sections 3400-3402. If waiver is by the guardian of the estate of the minor, approval of the guardianship court is not required. Similarly, paragraph (3) of subdivision (b) permits a conservator of the estate to waive the account without approval of the conservatorship court. Paragraph (4) of subdivision (b) permits a trustee who has consented to act to waive the account on behalf of the trust.

A guardian, conservator, trustee, or personal representative who waives accounting under this section acts in a fiduciary capacity and is held to the same standard that applies to other actions taken in the fiduciary capacity.

Background on Section 10954 of Repealed Code

Section 10954 was added by 1988 Cal. Stat. ch. 1199 § 91. The section restated former Probate Code Section 933 (repealed by 1988 Cal. Stat. ch. 1199 § 54.5), but excluded from those whose waiver is required beneficiaries whose interest will be satisfied in full. The section also made clear that an unpaid creditor may seek to require an account notwithstanding a waiver by beneficiaries. In subdivision (b)(4) of Section 10954, a reference to the trustee's written acceptance of the trust replaced the former reference to a trustee's consent to act, and a provision excusing court approval was added for court-supervised trusts. See Section 15600 (acceptance of trust by trustee). Court approval was also excused in subdivision (b)(5) for waiver by the personal representative. Subdivision (b)(6) was substituted for the former provision precluding waiver if a person entitled to distribution is unascertained. Section 10954 was amended by 1990 Cal. Stat. [AB 831] to make the following revisions:

(1) Paragraph (7) of subdivision (b) is added to recognize the authority of an attorney in fact to execute a waiver or acknowledgment under Section 10954.

(2) The reference to the fees and commissions paid or payable to the attorney is deleted, and "fees and commissions" is changed to "compensation", consistent with the terminology used in Part 7 (commencing with Section 10800) (compensation of personal representative).

See *Recommendations Relating to Probate Law: Hiring and Paying Attorneys, Advisors, and Others; Compensation of Personal Representative*, 20 Cal. L. Revision

Comm'n Reports 31 (1990). For background on the provisions of this part, see the Comment to this part under the part heading.

CHAPTER 3. SETTLEMENT OF ACCOUNT

§ 11000. Notice of hearing

Comment. Section 11000 continues Section 11000 of the repealed Probate Code without change. This section does not apply in a proceeding commenced before January 1, 1991. See Section 900. As to the law applicable in a proceeding commenced before January 1, 1991, see Section 900. As to the application of any amendments made after that date, see Section 3. For general provisions relating to notice of hearing, see Sections 1200-1220. See also Sections 1206 (notice to known heirs or devisees), 1215-1217 (mailing in general), 1250-1252 (request for special notice), 1260-1265 (proof of giving notice).

Background on Section 11000 of Repealed Code

Section 11000 was added by 1988 Cal. Stat. ch. 1199 § 91. Subdivisions (a) and (b) restated subdivisions (b) and (c) of former Probate Code Section 926 (repealed by 1988 Cal. Stat. ch. 1199 § 54.5) without substantive change. Subdivisions (b)(4) and (c) were new. Subdivision (d) restated the first portion of the second sentence of subdivision (a) of former Probate Code Section 926 (repealed by 1988 Cal. Stat. ch. 1199 § 54.5) without substantive change. Section 11000 was amended by 1990 Cal. Stat. [AB 831] to change the reference to "fees" to "compensation", consistent with the terminology used in Part 7 (commencing with Section 10800) (compensation of personal representative), and to make other nonsubstantive changes. See *Recommendations Relating to Probate Law: Hiring and Paying Attorneys, Advisors, and Others; Compensation of Personal Representative,* 20 Cal. L. Revision Comm'n Reports 31 (1990). For background on the provisions of this part, see the Comment to this part under the part heading.

§ 11001. Contest of account

Comment. Section 11001 continues Section 11001 of the repealed Probate Code without change. See also Section 1043 (response or objection).

Subdivision (b) permits a contest of the value of property for purposes of distribution only, and not of the inventory and appraisal; a separate procedure is provided for a direct contest of appraisal values. See Section 8906 (objection to appraisal). Subdivision (c) makes clear the right of an interested person to obtain court review of actions by the personal representative through a contest of an account.

Background on Section 11001 of Repealed Code

Section 11001 was added by 1988 Cal. Stat. ch. 1199 § 91. The section restated the first and fourth sentences of former Probate Code Section 927 (repealed by 1988 Cal. Stat. ch. 1199 § 54.5). Subdivision (c) was a new provision. For background on the provisions of this part, see the Comment to this part under the part heading.

§ 11002. Hearing on account

Comment. Section 11002 continues Section 11002 of the repealed Probate Code without change. There is no jury trial of a contest of an allowed claim. See Section 7200 (trial by jury). For general provisions, see Sections 1000-1004 (rules of practice), 1040-1050 (hearings and orders), 1240-1242 (citations), 1260-1265 (proof of giving notice of hearing). The provision for payment of referee compensation out of the estate is subject to Section 11003 (litigation expenses).

Background on Section 11002 of Repealed Code

Section 11002 was added by 1988 Cal. Stat. ch. 1199 § 91. The section restated the third and fifth sentences of former Probate Code Section 927 (repealed by 1988 Cal. Stat. ch. 1199 § 54.5), replacing the provision for examination under oath with a provision for a citation. The provision of former Probate Code Section 928 (repealed by 1988 Cal. Stat. ch. 1199 § 54.5) for jury trial of a contest of an allowed claim was not continued. For background on the provisions of this part, see the Comment to this part under the part heading.

§ 11003. Litigation expenses

Comment. Section 11003 continues Section 11003 of the repealed Probate Code without change. Litigation costs under Section 11003 include the costs of a referee appointed under Section 11002. This section does not apply in any proceeding for administration of a decedent's estate commenced before January 1, 1991. See Section 900. As to the law applicable in a proceeding commenced before January 1, 1991, see Section 900. As to the application of any amendments made after that date, see Section 3.

Background on Section 11003 of Repealed Code

Section 11003 was added by 1988 Cal. Stat. ch. 1199 § 91. Subdivision (a) superseded the second sentence of former Probate Code Section 927 (repealed by 1988 Cal. Stat. ch. 1199 § 54.5). Subdivision (b) was a new provision. Section 11003 was amended by 1990 Cal. Stat. [AB 831] to change "fees" and "commissions" to "compensation", consistent with the terminology used in Part 7 (commencing with Section 10800) (compensation of personal representative). See *Recommendations Relating to Probate Law: Hiring and Paying Attorneys, Advisors, and Others; Compensation of Personal Representative*, 20 Cal. L. Revision Comm'n Reports 31 (1990). For background on the provisions of this part, see the Comment to this part under the part heading.

§ 11004. Expenses of personal representative

Comment. Section 11004 continues Section 11004 of the repealed Probate Code without change. The section permits expenses such as insurance, gardening, pool maintenance, and maintenance of property pending sale or distribution to be paid from the estate.

Background on Section 11004 of Repealed Code

Section 11004 was added by 1988 Cal. Stat. ch. 1199 § 91. The section restated a provision formerly found in Probate Code Section 900 (as that section existed prior to

its amendment by 1988 Cal. Stat. ch. 1199 § 54.3). The section generalized the former language that provided for allowance of expenses in the care, management, and settlement of the estate. The section was amended by 1989 Cal. Stat. ch. 21 § 27 to make clear that the phrase "necessary expenses in the administration of the estate" includes the necessary expenses in the care, management, preservation, and settlement of the estate; this amendment did not make a substantive change in the section. See *Communication from the California Law Revision Commission Concerning Assembly Bill 156*, 20 Cal. L. Revision Comm'n Reports 227, 231-32 (1990). For background on the provisions of this part, see the Comment to this part under the part heading.

§ 11005. Settlement of claim not properly filed

Comment. Section 11005 continues Section 11005 of the repealed Probate Code without change.

Background on Section 11005 of Repealed Code

Section 11005 was added by 1988 Cal. Stat. ch. 1199 § 91. The section restated former Probate Code Section 929 (repealed by 1988 Cal. Stat. ch. 1199 § 54.5), substituting the phrase "did not exceed the amount reasonably necessary to satisfy the indebtedness" for the phrase "was the true amount of such indebtedness" in subdivision (c). The addition of the limitation that the debt shall have been paid within the time prescribed in Section 9154 (claim filing period plus 30 days) codified the effect of existing case law. Cf. Estate of Erwin, 117 Cal. App. 2d 203, 255 P.2d 97 (1953) (claim not made within claim filing period). For background on the provisions of this part, see the Comment to this part under the part heading.

CHAPTER 4. COMPELLING ACCOUNT

§ 11050. Sanction for failure to account

Comment. Section 11050 continues Section 11050 of the repealed Probate Code without change. This chapter may also be used to compel an account by a personal representative whose authority is terminated. See Section 10952. See also Section 8804 (use of procedure in this chapter to compel filing of inventory and appraisal).

Background on Section 11050 of Repealed Code

Section 11050 was added by 1988 Cal. Stat. ch. 1199 § 91. The section restated the third sentence of former Probate Code Section 922 (repealed by 1988 Cal. Stat. ch. 1199 § 54.5) without substantive change. For background on the provisions of this part, see the Comment to this part under the part heading.

§ 11051. Citation

Comment. Section 11051 continues Section 11051 of the repealed Probate Code without change. See also Sections 1240-1242 (citations).

Background on Section 11051 of Repealed Code

Section 11051 was added by 1988 Cal. Stat. ch. 1199 § 91. Subdivision (a) restated the last sentence of former Probate Code Section 922 (repealed by 1988 Cal. Stat. ch. 1199 § 54.5) without substantive change. Subdivision (b) restated a portion of former Probate Code Section 924 (repealed by 1988 Cal. Stat. ch. 1199 § 54.5) without substantive change. For background on the provisions of this part, see the Comment to this part under the part heading.

§ 11052. Punishment for contempt

Comment. Section 11052 continues Section 11052 of the repealed Probate Code without change. See also Section 8505 (removal from office for contempt).

Background on Section 11052 of Repealed Code

Section 11052 was added by 1988 Cal. Stat. ch. 1199 § 91. The section restated the last sentence of former Probate Code Section 921 and restated a portion of former Probate Code Section 924 (provisions repealed by 1988 Cal. Stat. ch. 1199 § 54.5) without substantive change. For background on the provisions of this part, see the Comment to this part under the part heading.

PART 9. PAYMENT OF DEBTS

Comment. This part supersedes Part 9 (commencing with Section 11400) of Division 7 of the repealed Probate Code. The superseded part was enacted upon recommendation of the California Law Revision Commission. See *Recommendation Relating to Creditor Claims Against Decedent's Estate,* 19 Cal. L. Revision Comm'n Reports 299 (1988).

CHAPTER 1. DEFINITIONS AND PRELIMINARY PROVISIONS

Article 1. Definitions

§ 11400. Application of definitions

Comment. Section 11400 continues Section 11400 of the repealed Probate Code without change. This part does not apply in any proceeding for administration of a decedent's estate commenced before July 1, 1988. See Section 11405. As to the application of any amendments made after that date, see Section 3.

Background on Section 11400 of Repealed Code

Section 11400 was a new provision added by 1987 Cal. Stat. ch. 923 § 93.

§ 11401. Debt

Comment. Section 11401 continues Section 11401 of the repealed Probate Code without change. Subdivision (a) includes debts payable under the Independent Administration of Estates Act that are not established under Section 9000 et seq. (creditor claims), as well as other debts paid even though not presented through the formal claim procedure. See Sections 9154 (waiver of formal defects), 11005 (accounts), 11422 (payment of debts on court order). This part does not apply in any proceeding for administration of a decedent's estate commenced before July 1, 1988. See Section 11405. As to the application of any amendments made after that date, see Section 3.

Background on Section 11401 of Repealed Code

Section 11401 was added by 1987 Cal. Stat. ch. 923 § 93. The section superseded the introductory portion of former Probate Code Section 950 (repealed by 1987 Cal. Stat. ch. 923 § 48).

§ 11402. Wage claim

Comment. Section 11402 continues Section 11402 of the repealed Probate Code without change. This part does not apply in any proceeding for administration of a decedent's estate commenced before July 1, 1988. See Section 11405. As to the application of any amendments made after that date, see Section 3.

Background on Section 11402 of Repealed Code

Section 11402 was added by 1987 Cal. Stat. ch. 923 § 93. The section restated the first sentence of paragraph (6) of former Probate Code Section 950 and a portion of former Probate Code Section 951 (provisions repealed by 1987 Cal. Stat. ch. 923 § 48) and increased the amount from $900 to $2,000.

Article 2. Proceedings Commenced Before July 1, 1988

§ 11405. Administration proceedings commenced before July 1, 1988

Comment. Section 11405 continues Section 11405 of the repealed Probate Code without substantive change.

Background on Section 11405 of Repealed Code

Section 11405 was a new provision added by 1987 Cal. Stat. ch. 923 § 93.

CHAPTER 2. GENERAL PROVISIONS

§ 11420. Priority for payment

Comment. Section 11420 continues Section 11420 of the repealed Probate Code without change. See also Section 9807 (payment of established claim where resort to security insufficient to pay claim). This part does not apply in any proceeding for administration of a decedent's estate commenced before July 1, 1988. See Section 11405. As to the application of any amendments made after that date, see Section 3.

Background on Section 11420 of Repealed Code

Section 11420 was added by 1987 Cal. Stat. ch. 923 § 93. Subdivision (a) restated former Probate Code Section 950 (repealed by 1987 Cal. Stat. ch. 923 § 48), except that Section 11420 made clear that preferred debts owed to the United States and to California must be recognized to the extent required by law. See, e.g., Rev. & Tax. Code § 19265 (priority of claim for taxes under Personal Income Tax Law). Subdivision (b) restated the third sentence of former Probate Code Section 952 without substantive change and superseded the last sentence of former Probate Code Section 953 (provisions repealed by 1987 Cal. Stat. ch. 923 § 48).

§ 11421. Immediate payment of priority debts

Comment. Section 11421 continues Section 11421 of the repealed Probate Code without change. The introductory clause recognizes that

the order of priority for payment of funeral expenses, expenses of last illness, family allowance, and wage claims is the basic order of priority provided in Section 11420. Section 11421 is an exception to the rule of Section 11422 (payment of debts on court order) in that payment under Section 11421 is required even though the court has not ordered payment. This part does not apply in any proceeding for administration of a decedent's estate commenced before July 1, 1988. See Section 11405. As to the application of any amendments made after that date, see Section 3.

Background on Section 11421 of Repealed Code

Section 11421 was added by 1987 Cal. Stat. ch. 923 § 93 and was amended by 1988 Cal. Stat. ch. 113 § 15.3. The section as enacted restated the first portion of former Probate Code Section 951 (repealed by 1987 Cal. Stat. ch. 923 § 48), but added a reference to "debts owed to the United States or to this state that have preference under the laws of the United States or of this state." The 1988 amendment deleted this addition. The amendment recognized that such debts are not given preference over expenses of administration or charges against the estate, but only over other debts due from the decedent. See, e.g., Estate of Muldoon, 128 Cal. App. 2d 284, 275 P.2d 597 (1954) (federal preference); Estate of Jacobs, 61 Cal. App. 2d 152, 142 P.2d 454 (1943) (state preference). See Section 11420 and the Comment thereto. See also Rev. & Tax. Code § 19265 (personal income tax priority over claims other than taxes, expenses of administration, funeral expenses, expenses of last illness, family allowance, and wage claims). The amendment also had the effect of reinstating the priority given wage claims by former Probate Code Section 951. For background on the 1988 amendment, see *Communication from the California Law Revision Commission Concerning Assembly Bill 2779,* 19 Cal. L. Revision Comm'n Reports 1191, 1194 (1988).

§ 11422. Payment of debts on court order

Comment. Section 11422 continues Section 11422 of the repealed Probate Code without change. This section makes clear that the notice of hearing of an account that will result in the estate being exhausted must comply with the requirements for notice of hearing of a final account. See Section 11000 (final account). Discharge may be obtained by court order. Section 12250 (order of discharge). For approval of the personal representative's account where payment is made without prior court order, see Section 11005 (accounts). See also Section 9154 (waiver of formal defects). This part does not apply in any proceeding for administration of a decedent's estate commenced before July 1, 1988. See Section 11405. As to the application of any amendments made after that date, see Section 3.

Background on Section 11422 of Repealed Code

Section 11422 was added by 1987 Cal. Stat. ch. 923 § 93. Subdivision (a) restated the last portion of former Probate Code Section 951 (repealed by 1987 Cal. Stat. ch. 923 § 48) without substantive change. Subdivisions (b) and (c) restated the first,

second, and fourth sentences of former Probate Code Section 952 (repealed by 1987 Cal. Stat. ch. 923 § 48) without substantive change. Subdivision (d) was new.

§ 11423. Interest

Comment. Section 11423 continues Section 11423 of the repealed Probate Code without change. The legal rate of interest on judgments is provided in Code of Civil Procedure Section 685.010. For special statutory rates of interest, see, e.g., Rev. & Tax. Code §§ 19269 (adjusted annual rate under Personal Income Tax Law), 6591.5 (modified adjusted rate under Sales and Use Tax Law). In the case of a debt reduced to judgment, interest commences on entry of the judgment. Code Civ. Proc. § 685.020. This part does not apply in any proceeding for administration of a decedent's estate commenced before July 1, 1988. See Section 11405. As to the application of any amendments made after that date, see Section 3.

Background on Section 11423 of Repealed Code

Section 11423 was added by 1987 Cal. Stat. ch. 923 § 93. The section superseded former Probate Code Section 733 (repealed by 1987 Cal. Stat. ch. 923 § 37).

§ 11424. Duty of personal representative to pay debts pursuant to court order

Comment. Section 11424 continues Section 11424 of the repealed Probate Code with the omission of subdivision (b). The omitted subdivision is unnecessary in view of Section 1049 (enforcement of orders). For provisions on abatement of devises, see Sections 21400-21406. This part does not apply in any proceeding for administration of a decedent's estate commenced before July 1, 1988. See Section 11405. As to the application of any amendments made after that date, see Section 3.

Background on Section 11424 of Repealed Code

Section 11424 was added by 1987 Cal. Stat. ch. 923 § 93. The section restated former Probate Code Section 954 (repealed by 1987 Cal. Stat. ch. 923 § 48) without substantive change.

§ 11425. Payment of debt not due

Comment. Section 11425 continues Section 11425 of the repealed Probate Code without change. This part does not apply in any proceeding for administration of a decedent's estate commenced before July 1, 1988. See Section 11405. As to the application of any amendments made after that date, see Section 3.

Background on Section 11425 of Repealed Code

Section 11425 was added by 1987 Cal. Stat. ch. 923 § 93. The section restated the second sentence of former Probate Code Section 953 (repealed by 1987 Cal. Stat. ch. 923 § 48) without substantive change.

§ 11426. Trust for installment or contingent debt

Comment. Section 11426 continues Section 11426 of the repealed Probate Code without change. This part does not apply in any proceeding for administration of a decedent's estate commenced before July 1, 1988. See Section 11405. As to the application of any amendments made after that date, see Section 3.

Background on Section 11426 of Repealed Code

Section 11426 was added by 1987 Cal. Stat. ch. 923 § 93. The section restated the first paragraph of former Probate Code Section 953.1 (repealed by 1987 Cal. Stat. ch. 923 § 48), authorizing investments that would be proper for a personal representative rather than for a savings bank.

§ 11427. Disputed and contingent debts

Comment. Section 11427 continues Section 11427 of the repealed Probate Code without change. Payment into court under this section is subject to the general provisions of Section 11420 relating to priority of payment. If the estate is insolvent, payment may not be made under this section unless payment of proportionate shares is ordered. For other provisions relating to payment of installment and contingent debts and debts not yet due, see Sections 11425 (payment of debt not due) and 11426 (trust for installment or contingent debt). This part does not apply in any proceeding for administration of a decedent's estate commenced before July 1, 1988. See Section 11405. As to the application of any amendments made after that date, see Section 3.

Background on Section 11427 of Repealed Code

Section 11427 was added by 1987 Cal. Stat. ch. 923 § 93. The section restated the first sentence of former Probate Code Section 953 (repealed by 1987 Cal. Stat. ch. 923 § 48) without substantive change.

§ 11428. Deposit for missing creditor

Comment. Section 11428 continues Section 11428 of the repealed Probate Code without change. The amount of the deposit under this section includes interest on the debt from the date payment was ordered. See Section 11423 (interest). This part does not apply in any proceeding for administration of a decedent's estate commenced before July 1, 1988. See Section 11405. As to the application of any amendments made after that date, see Section 3.

Background on Section 11428 of Repealed Code

Section 11428 was added by 1987 Cal. Stat. ch. 923 § 93. The section restated former Probate Code Section 738 (repealed by 1987 Cal. Stat. ch. 923 § 37) without substantive change.

§ 11429. Unpaid creditor

Comment. Section 11429 continues Section 11429 of the repealed Probate Code without change. This part does not apply in any

proceeding for administration of a decedent's estate commenced before July 1, 1988. See Section 11405. As to the application of any amendments made after that date, see Section 3.

Background on Section 11429 of Repealed Code

Section 11429 was added by 1987 Cal. Stat. ch. 923 § 93. The section superseded former Probate Code Section 955 (repealed by 1987 Cal. Stat. ch. 923 § 48).

CHAPTER 3. ALLOCATION OF DEBTS BETWEEN ESTATE AND SURVIVING SPOUSE

§ 11440. When allocation may be made

Comment. Section 11440 continues Section 11440 of the repealed Probate Code without change. Under this section, a petition may be made for allocation of a debt of the decedent or of the surviving spouse even though the creditor has not made a claim and the debt has not been established under Part 4 (commencing with Section 9000). In this respect, the term "debt" is used in this section more broadly than the definition in Section 11401 ("debt" defined). For general provisions relating to petitions and other papers, see Sections 1020-1023. This part does not apply in any proceeding for administration of a decedent's estate commenced before July 1, 1988. See Section 11405. As to the application of any amendments made after that date, see Section 3.

Background on Section 11440 of Repealed Code

Section 11440 was added by 1987 Cal. Stat. ch. 923 § 93. The section combined subdivision (a) of former Probate Code Section 980 (repealed by 1987 Cal. Stat. ch. 923 § 48.6) with portions of former Probate Code Sections 704.2 and 704.4 (claim by surviving spouse) (provisions repealed by 1987 Cal. Stat. ch. 923 § 37), but allowed the petition to be made at any time before the court order for final distribution.

§ 11441. Petition for allocation

Comment. Section 11441 continues Section 11441 of the repealed Probate Code without change. The term "debt" is used in this section more broadly than the definition in Section 11401 ("debt" defined). See the Comment to Section 11440. For general provisions relating to petitions and other papers, see Sections 1020-1023. This part does not apply in any proceeding for administration of a decedent's estate commenced before July 1, 1988. See Section 11405. As to the application of any amendments made after that date, see Section 3.

Background on Section 11441 of Repealed Code

Section 11441 was added by 1987 Cal. Stat. ch. 923 § 93. The section combined subdivision (b) of former Probate Code Section 980 (repealed by 1987 Cal. Stat. ch. 923 § 48.6) and portions of former Probate Code Sections 704.2 and 704.4 (provisions repealed by 1987 Cal. Stat. ch. 923 § 37).

§ 11442. Inventory of property of surviving spouse

Comment. Section 11442 continues Section 11442 of the repealed Probate Code without change. For general provisions relating to hearings and orders, see Sections 1040-1050. This part does not apply in any proceeding for administration of a decedent's estate commenced before July 1, 1988. See Section 11405. As to the application of any amendments made after that date, see Section 3.

Background on Section 11442 of Repealed Code

Section 11442 was added by 1987 Cal. Stat. ch. 923 § 93. The section restated subdivision (c) of former Probate Code Section 980 (repealed by 1987 Cal. Stat. ch. 923 § 48.6) without substantive change and superseded portions of former Probate Code Sections 704.2 and 704.4 (provisions repealed by 1987 Cal. Stat. ch. 923 § 37).

§ 11443. Notice of hearing

Comment. Section 11443 continues Section 11443 of the repealed Probate Code without change. For general provisions, see Sections 1200-1230 (notice of hearing), 1250-1252 (request for special notice), 1260-1265 (proof of giving of notice). This part does not apply in any proceeding for administration of a decedent's estate commenced before July 1, 1988. See Section 11405. As to the application of any amendments made after that date, see Section 3.

Background on Section 11443 of Repealed Code

Section 11443 was added by 1987 Cal. Stat. ch. 923 § 93. The section superseded subdivision (d) of former Probate Code Section 980 (repealed by 1987 Cal. Stat. ch. 923 § 48.6) and incorporated general service of notice procedures.

§ 11444. Allocation

Comment. Section 11444 continues Section 11444 of the repealed Probate Code without change. This section makes clear that allocation of liability is to be based on rules applicable to liability of marital property for debts during marriage. See Civil Code Sections 5120.010-5122. This part does not apply in any proceeding for administration of a decedent's estate commenced before July 1, 1988. See Section 11405. As to the application of any amendments made after that date, see Section 3.

Background on Section 11444 of Repealed Code

Section 11444 was added by 1987 Cal. Stat. ch. 923 § 93. The section combined subdivision (e) of former Probate Code Section 980 (repealed by 1987 Cal. Stat. ch. 923 § 48.6) and a portion of former Probate Code Section 713.5 (repealed by 1987 Cal. Stat. ch. 923 § 37).

§ 11445. Order implementing allocation

Comment. Section 11445 continues Section 11445 of the repealed Probate Code without change. For general provisions relating to hearings and orders, see Sections 1040-1050. See also Section 7240 (order

appealable). This part does not apply in any proceeding for administration of a decedent's estate commenced before July 1, 1988. See Section 11405. As to the application of any amendments made after that date, see Section 3.

Background on Section 11445 of Repealed Code

Section 11445 was added by 1987 Cal. Stat. ch. 923 § 93. The section combined subdivision (f) of former Probate Code Section 980 (repealed by 1987 Cal. Stat. ch. 923 § 48.6) and a portion of former Probate Code Section 713.5 (repealed by 1987 Cal. Stat. ch. 923 § 37).

§ 11446. Funeral expenses and last illness expenses

Comment. Section 11446 continues Section 11446 of the repealed Probate Code without change. This part does not apply in any proceeding for administration of a decedent's estate commenced before July 1, 1988. See Section 11405. As to the application of any amendments made after that date, see Section 3.

Background on Section 11446 of Repealed Code

Section 11446 was added by 1987 Cal. Stat. ch. 923 § 93. The section restated former Probate Code Section 951.1 (repealed by 1987 Cal. Stat. ch. 923 § 48) without substantive change.

PART 10. DISTRIBUTION OF ESTATE

Comment. This part supersedes Part 10 (commencing with Section 11600) of Division 7 of the repealed Probate Code. The superseded part was enacted upon recommendation of the California Law Revision Commission. See *Recommendation Relating to Distribution and Discharge,* 19 Cal. L. Revision Comm'n Reports 953 (1988). See also *Communication from the California Law Revision Commission Concerning Assembly Bill 2841,* 19 Cal. L. Revision Comm'n Reports 1201, 1243-48 (1988).

CHAPTER 1. ORDER FOR DISTRIBUTION

Article 1. General Provisions

§ 11600. Petition for distribution

Comment. Section 11600 continues Section 11600 of the repealed Probate Code without change. For the time and manner prescribed for making a petition, see Sections 11620 (petition for preliminary distribution) and 11640 (petition for final distribution). See also Sections 12200-12206 (time for closing estate). For general provisions relating to petitions and other papers, See Sections 1020-1023.

Background on Section 11600 of Repealed Code

Section 11600 was added by 1988 Cal. Stat. ch. 1199 § 91.5. The section restated without substantive change a portion of subdivision (a) of former Probate Code Section 1000 (with the exception of the reference to distribution of "priorities") and a portion

of subdivision (a) of former Probate Code Section 1020 (provisions repealed by 1988 Cal. Stat. ch. 1199 § 55.5). For background on the provisions of this part, see the Comment to this part under the part heading.

§ 11601. Notice of hearing

Comment. Section 11601 continues Section 11601 of the repealed Probate Code without substantive change. For general provisions, see Sections 1200-1230 (notice of hearing), 1250-1252 (request for special notice), 1260-1265 (proof of giving of notice).

Background on Section 11601 of Repealed Code

Section 11601 was added by 1988 Cal. Stat. ch. 1199 § 91.5. With the exception of subdivision (b)(4), the section restated subdivisions (b) and (c) of former Probate Code Sections 1000, 1020, and 1027 (provisions repealed by 1988 Cal. Stat. ch. 1199 § 55.5). Subdivision (b)(4) restated subdivision (d) of former Probate Code Section 1027 (repealed by 1988 Cal. Stat. ch. 1199 § 55.5), except that the time of notice was reduced from 30 days to 15. For background on the provisions of this part, see the Comment to this part under the part heading.

§ 11602. Opposition to petition

Comment. Section 11602 continues Section 11602 of the repealed Probate Code without change. See also Section 1043 (objections).

Background on Section 11602 of Repealed Code

Section 11602 was added by 1988 Cal. Stat. ch. 1199 § 91.5. The section restated without substantive change subdivision (d) of former Probate Code Section 1000 and a portion of the second sentence of subdivision (a) of former Probate Code Section 1020 (provisions repealed by 1988 Cal. Stat. ch. 1199 § 55.5). For background on the provisions of this part, see the Comment to this part under the part heading.

§ 11603. Hearing and order

Comment. Section 11603 continues Section 11603 of the repealed Probate Code without change. For the requirements for distribution, see Sections 11621 (preliminary distribution) and 11640 (final distribution). See also Sections 1040-1050 (hearings and orders).

Background on Section 11603 of Repealed Code

Section 11603 was added by 1988 Cal. Stat. ch. 1199 § 91.5. The section restated portions of subdivision (e) of former Probate Code Section 584.3 (repealed by 1987 Cal. Stat. ch. 923 § 35) and of former Probate Code Sections 1001 and 1021 (provisions repealed by 1988 Cal. Stat. ch. 1199 § 55.5) without substantive change. For background on the provisions of this part, see the Comment to this part under the part heading.

§ 11604. Distribution to person other than beneficiary

Comment. Section 11604 continues Section 11604 of the repealed Probate Code without substantive change. For general provisions, see Sections 1000-1004 (rules of practice), 1020-1023 (petitions and other papers), 1040-1050 (hearings and orders), 1200-1230 (notice of hearing), 1250-1252 (request for special notice), 1260-1265 (proof of giving of notice).

Background on Section 11604 of Repealed Code

Section 11604 was added by 1988 Cal. Stat. ch. 1199 § 91.5. The section restated former Probate Code Section 1020.1 (repealed by 1988 Cal. Stat. ch. 1199 § 55.5), standardizing the manner of notice with other provisions in the code. For background on the provisions of this part, see the Comment to this part under the part heading.

§ 11605. Conclusiveness of order

Comment. Section 11605 continues Section 11605 of the repealed Probate Code without change. The court may correct clerical errors in orders as entered. See Code Civ. Proc. § 473. See also Sections 7260-7263 (orders affecting property).

Background on Section 11605 of Repealed Code

Section 11605 was added by 1988 Cal. Stat. ch. 1199 § 91.5. The section restated portions of former Probate Code Sections 1003, 1021, and 1054 (provisions repealed by 1988 Cal. Stat. ch. 1199 § 55.5). For background on the provisions of this part, see the Comment to this part under the part heading.

Article 2. Preliminary Distribution

§ 11620. Time for petition

Comment. Section 11620 continues Section 11620 of the repealed Probate Code without substantive change. The petition may be made by the personal representative, a beneficiary, or other interested person. See Section 11600 (petition for distribution). If distribution is made before four months have elapsed, the distributee must give a bond in the amount of the distribution. See Section 11622(a) (bond). If distribution is made after four months have elapsed, the court may require the distributee to give a bond. See Section 11622(b) (bond). See also Section 58 ("general personal representative" includes a special administrator who has the powers, duties, and obligations of a general personal representative under Section 8545).

Background on Section 11620 of Repealed Code

Section 11620 was added by 1988 Cal. Stat. ch. 1199 § 91.5. The section restated a portion of subdivision (a) of former Probate Code Section 1000 (repealed by 1988 Cal. Stat. ch. 1199 § 55.5). For background on the provisions of this part, see the Comment to this part under the part heading.

§ 11621. Order for distribution

Comment. Section 11621 continues Section 11621 of the repealed Probate Code without change.

Background on Section 11621 of Repealed Code

Section 11621 was added by 1988 Cal. Stat. ch. 1199 § 91.5. The section superseded a portion of former Probate Code Section 1001 (repealed by 1988 Cal. Stat. ch. 1199 § 55.5). For background on the provisions of this part, see the Comment to this part under the part heading.

§ 11622. Bond

Comment. Section 11622 continues Section 11622 of the repealed Probate Code without change.

Background on Section 11622 of Repealed Code

Section 11622 was added by 1988 Cal. Stat. ch. 1199 § 91.5. The section superseded a portion of former Probate Code Section 1001 (repealed by 1988 Cal. Stat. ch. 1199 § 55.5). For background on the provisions of this part, see the Comment to this part under the part heading.

§ 11623. Distribution under Independent Administration of Estates Act

Comment. Section 11623 continues Section 11623 of the repealed Probate Code without substantive change. The court may order reduced notice (Section 1203) as well as prescribe an ex parte hearing in an appropriate case (Section 1220(c)). Subdivision (b) makes clear that the total of all distributions under this section may not exceed 50 percent of the net value of the estate. An account is not statutorily required for an order of preliminary distribution as it is for an order for final distribution. See Section 10951 (final account). However, the court may not make an order under this section unless it is satisfied from the information presented to it that distribution may be made without loss to creditors or injury to the estate or any interested person. See Section 11621 (order for distribution).

For general provisions, see Sections 1000-1004 (rules of practice), 1020-1023 (petitions and other papers), 1040-1050 (hearings and orders), 1200-1230 (notice of hearing), 1250-1252 (request for special notice), 1260-1265 (proof of giving of notice).

Background on Section 11623 of Repealed Code

Section 11623 was added by 1988 Cal. Stat. ch. 1199 § 91.5. The section superseded former Probate Code Section 1004 (repealed by 1988 Cal. Stat. ch. 1199 § 55.5). The provision of former law relating to dispensing with an account was omitted. For background on the provisions of this part, see the Comment to this part under the part heading.

§ 11624. Costs of proceeding

Comment. Section 11624 continues Section 11624 of the repealed Probate Code without change. Under this section, the allocation of costs is left to the court, whether or not the personal representative is the petitioner. One factor in the exercise of the court's discretion could be whether the personal representative was negligent in failing to make prompt distribution, necessitating a petition under this chapter. For expenses of partition, see Section 11955.

Background on Section 11624 of Repealed Code

Section 11624 was added by 1988 Cal. Stat. ch. 1199 § 91.5. The section superseded former Probate Code Section 1002 (repealed by 1988 Cal. Stat. ch. 1199

§ 55.5). For background on the provisions of this part, see the Comment to this part under the part heading.

Article 3. Final Distribution

§ 11640. Petition and order

Comment. Section 11640 continues Section 11640 of the repealed Probate Code without substantive change. The petition may be made by the personal representative, a beneficiary, or other interested person. See Section 11600 (petition for distribution). Unless there has been a waiver of accounts, the estate is not in a condition to be closed until final settlement of the accounts of the personal representative. See also Sections 12201 (report of status of administration), 12205 (reduction of compensation of personal representative for delay in administration of estate).

For general provisions, see Sections 1000-1004 (rules of practice), 1020-1023 (petitions and other papers), 1040-1050 (hearings and orders), 1200-1230 (notice of hearing), 1250-1252 (request for special notice), 1260-1265 (proof of giving of notice).

Background on Section 11640 of Repealed Code

Section 11640 was added by 1988 Cal. Stat. ch. 1199 § 91.5. Subdivision (a) restated portions of former Probate Code Section 956 (reenacted without change by 1987 Cal. Stat. ch. 923 § 48.5 and repealed by 1988 Cal. Stat. ch. 1199 § 55) and subdivision (a) of former Probate Code Sections 1020 and 1027 (provisions repealed by 1988 Cal. Stat. ch. 1199 § 55.5) with the addition of a reference to the insolvency of the estate. Subdivision (b) restated a portion of former Probate Code Section 1054 (repealed by 1988 Cal. Stat. ch. 1199 § 55.5) without substantive change. Subdivision (c) restated a portion of former Probate Code Section 956 (reenacted without change by 1987 Cal. Stat. ch. 923 § 48.5 and repealed by 1988 Cal. Stat. ch. 1199 § 55), with the addition of a reference to the provisions governing the time for closing the estate. For background on the provisions of this part, see the Comment to this part under the part heading.

§ 11641. Distribution under court order

Comment. Section 11641 continues Section 11641 of the repealed Probate Code without change. For a stay in case of an appeal, see Section 7241.

Background on Section 11641 of Repealed Code

Section 11641 was added by 1988 Cal. Stat. ch. 1199 § 91.5. The section superseded the last portion of the second sentence of former Probate Code Section 926 (repealed by 1988 Cal. Stat. ch. 1199 § 54.5). The section was amended by 1989 Cal. Stat. ch. 21 § 28 to permit distribution on entry of an order for final distribution. See *Communication from the California Law Revision Commission Concerning Assembly Bill 156*, 20 Cal. L. Revision Comm'n Reports 227, 232 (1990). For background on the provisions of this part, see the Comment to this part under the part heading.

§ 11642. After-acquired or after-discovered property

Comment. Section 11642 continues Section 11642 of the repealed Probate Code without substantive change.

Background on Section 11642 of Repealed Code

Section 11642 was added by 1988 Cal. Stat. ch. 1199 § 91.5. The section superseded former Probate Code Section 1020.5 (supplementary account) (repealed by 1988 Cal. Stat. ch. 1199 § 55.5). For background on the provisions of this part, see the Comment to this part under the part heading.

CHAPTER 2. DETERMINATION OF PERSONS ENTITLED TO DISTRIBUTION

§ 11700. Petition

Comment. Section 11700 continues Section 11700 of the repealed Probate Code without change. This section permits a petition until a final order for distribution is made. The time limit is jurisdictional. See Section 11704 (hearing); cf. Section 11605 (conclusiveness of order). For general provisions, see Sections 1000-1004 (rules of practice), 1020-1023 (petitions and other papers), 1040-1050 (hearings and orders).

Background on Section 11700 of Repealed Code

Section 11700 was added by 1988 Cal. Stat. ch. 1199 § 91.5. The section restated the first sentence of former Probate Code Section 1080 (repealed by 1988 Cal. Stat. ch. 1199 § 56.5), but permits a petition until a final order for distribution is made. That time limit, unlike the time limit of former Section 1080, is jurisdictional. For background on the provisions of this part, see the Comment to this part under the part heading.

§ 11701. Notice of hearing

Comment. Section 11701 continues Section 11701 of the repealed Probate Code without substantive change. For general provisions, see Sections 1200-1230 (notice of hearing), 1250-1252 (request for special notice), 1260-1265 (proof of giving of notice). See also Section 1285 (clerk to set matter for hearing).

Background on Section 11701 of Repealed Code

Section 11701 was added by 1988 Cal. Stat. ch. 1199 § 91.5. Subdivision (a) continued the second sentence of former Probate Code Section 1080 (repealed by 1988 Cal. Stat. ch. 1199 § 56.5) without substantive change. Subdivision (b) superseded the third sentence of former Probate Code Section 1080 (repealed by 1988 Cal. Stat. ch. 1199 § 56.5). For background on the provisions of this part, see the Comment to this part under the part heading.

§ 11702. Responsive pleading

Comment. Section 11702 continues Section 11702 of the repealed Probate Code without change. Subdivision (b) is comparable to Section 8251(c) (will contest). For general provisions, see Sections 1000-1004

(rules of practice), 1020-1023 (petitions and other papers), 1040-1050 (hearings and orders).

Background on Section 11702 of Repealed Code

Section 11702 was added by 1988 Cal. Stat. ch. 1199 § 91.5. Subdivision (a) restated the fourth and fifth sentences of former Probate Code Section 1080 (repealed by 1988 Cal. Stat. ch. 1199 § 56.5) without substantive change, with the clarification that the written statement may be in support of or in opposition to the petition. Subdivision (b) was new. For background on the provisions of this part, see the Comment to this part under the part heading.

§ 11703. Attorney General as party

Comment. Section 11703 continues Section 11703 of the repealed Probate Code without change.

Background on Section 11703 of Repealed Code

Section 11703 was added by 1988 Cal. Stat. ch. 1199 § 91.5. The section restated the last sentence of former Probate Code Section 1080 (repealed by 1988 Cal. Stat. ch. 1199 § 56.5) without substantive change. For background on the provisions of this part, see the Comment to this part under the part heading.

§ 11704. Hearing

Comment. Section 11704 restates Section 11704 of the repealed Probate Code without substantive change. The procedure applicable in a proceeding under this chapter is that applicable to civil actions generally. See Section 1000 (general rules of practice govern). In addition to evidence otherwise admissible in the proceeding, Section 11704 makes admissible the statements referred to in subdivision (a). For general provisions, see Sections 1000-1004 (rules of practice), 1020-1023 (petitions and other papers), 1040-1050 (hearings and orders).

Background on Section 11704 of Repealed Code

Section 11704 was added by 1988 Cal. Stat. ch. 1199 § 91.5. The section restated without substantive change the second sentence and the first portion of the third sentence of former Probate Code Section 1081 (repealed by 1988 Cal. Stat. ch. 1199 § 56.5), except that a prior court order is not required for participation of the personal representative. The provisions of former Section 1081 for jury trial and special rules of evidence were not continued. For background on the provisions of this part, see the Comment to this part under the part heading.

§ 11705. Court order

Comment. Section 11705 continues Section 11705 of the repealed Probate Code without change. For general provisions relating to hearings and orders, see Sections 1040-1050. See also Section 11750 (good faith purchaser for value of distributed property).

Background on Section 11705 of Repealed Code

Section 11705 was added by 1988 Cal. Stat. ch. 1199 § 91.5. Subdivision (a) restated the last portion of the second sentence of former Probate Code Section 1081 (repealed by 1988 Cal. Stat. ch. 1199 § 56.5) without substantive change. Subdivision (b) restated former Probate Code Section 1082 (repealed by 1988 Cal. Stat. ch. 1199

§ 56.5) without substantive change. For background on the provisions of this part, see the Comment to this part under the part heading.

CHAPTER 3. DISTRIBUTION OF PROPERTY IN ESTATE

§ 11750. Responsibility for distribution

Comment. Section 11750 continues Section 11750 of the repealed Probate Code without change, except that subdivision (c) is revised to extend to any person who enters into a transaction in good faith and for a valuable consideration, not only purchasers. In the case of a distribution to a trust, the trustee is the distributee. See also Section 34 ("devisee" defined). With respect to after-discovered or after-acquired property, see Section 11642.

Background on Section 11750 of Repealed Code

Section 11750 was added by 1988 Cal. Stat. ch. 1199 § 91.5. Subdivisions (a) and (c) were new. Subdivision (b) restated a portion of former Probate Code Section 1021 (repealed by 1988 Cal. Stat. ch. 1199 § 55.5). For background on the provisions of this part, see the Comment to this part under the part heading.

§ 11751. Receipt for distributed property

Comment. Section 11751 continues Section 11751 of the repealed Probate Code without change. Failure of the personal representative to record the court order for distribution of real property or the personal representative's deed does not affect title of the distributee. See also Section 7263 (recordation of order affecting title to real property).

Background on Section 11751 of Repealed Code

Section 11751 was a new provision added by 1988 Cal. Stat. ch. 1199 § 91.5. For background on the provisions of this part, see the Comment to this part under the part heading.

§ 11752. Inventory by life tenant

Comment. Section 11752 continues Section 11752 of the repealed Probate Code without change.

Background on Section 11752 of Repealed Code

Section 11752 was added by 1988 Cal. Stat. ch. 1199 § 91.5. The section superseded former Probate Code Section 1065 (repealed by 1988 Cal. Stat. ch. 1199 § 55.5). For background on the provisions of this part, see the Comment to this part under the part heading.

§ 11753. Filing receipts and discharge

Comment. Section 11753 continues Section 11753 of the repealed Probate Code without substantive change. For provisions governing discharge of the personal representative, see Sections 12250-12252. Recording information under subdivision (b) may include an instrument number and a book and page number where appropriate.

Background on Section 11753 of Repealed Code

Section 11753 was added by 1988 Cal. Stat. ch. 1199 § 91.5. Subdivision (a) restated a portion of former Probate Code Section 1003 (repealed by 1988 Cal. Stat. ch. 1199 § 55.5), but eliminated the reference to a personal representative "in this State." Subdivisions (b) and (c) were new. For background on the provisions of this part, see the Comment to this part under the part heading.

CHAPTER 4. DECEASED DISTRIBUTEE

§ 11801. Distribution despite death of beneficiary

Comment. Section 11801 continues Section 11801 of the repealed Probate Code without change. A distribution made under court order is valid as to bona fide purchasers for value. See Section 11750 (responsibility for distribution). A provision in a will requiring survival to the date of distribution is satisfied by survival to the date distribution could and should have occurred. Estate of Taylor, 66 Cal. 2d 855, 428 P.2d 301, 59 Cal. Rptr. 437 (1967).

Background on Section 11801 of Repealed Code

Section 11801 was added by 1988 Cal. Stat. ch. 1199 § 91.5. The section restated the second paragraph of former Probate Code Section 1023 (repealed by 1988 Cal. Stat. ch. 1199 § 55.5), omitting the reference to an improper distribution being void. The section was amended by 1989 Cal. Stat. ch. 21 § 29 to make clear that, in the case of a marital deduction gift, any survival requirement in the will that exceeds or may exceed six months is construed to be a six month limitation under Section 21525. See *Communication from the California Law Revision Commission Concerning Assembly Bill 156,* 20 Cal. L. Revision Comm'n Reports 227, 232 (1990). For background on the provisions of this part, see the Comment to this part under the part heading.

§ 11802. Manner of distribution

Comment. Section 11802 continues Section 11802 of the repealed Probate Code without substantive change.

Background on Section 11802 of Repealed Code

Section 11802 was added by 1988 Cal. Stat. ch. 1199 § 91.5. Subdivision (a) restated the first paragraph of former Probate Code Section 1023 (repealed by 1988 Cal. Stat. ch. 1199 § 55.5) without substantive change. Subdivision (b) restated former Probate Code Section 1022 (repealed by 1988 Cal. Stat. ch. 1199 § 55.5), substituting emancipation for marriage. Subdivision (c) was new. For background on the provisions of this part, see the Comment to this part under the part heading.

CHAPTER 5. DEPOSIT WITH COUNTY TREASURER

§ 11850. When deposit with county treasurer authorized

Comment. Section 11850 continues Section 11850 of the repealed Probate Code without change, except that subdivision (b) is revised to delete the reference to an acceptance by the distributee. The concept of an acceptance is not implemented in the statutes on distribution. Distribution is made to the named distributee or any known assignee of

the named distributee, regardless of the place of residence of the distributee.

Distribution to the county treasurer under this section is permissive. Therefore, the personal representative may make distribution in any other manner that is appropriate. For example, distribution to a minor for whom no guardian has been appointed might be made under the Uniform Transfers to Minors Act (Sections 3905-3906) or other under another appropriate statute.

If the distributee is a nonresident minor or nonresident incompetent person who has a guardian, conservator, or other fiduciary of the estate legally appointed under the law of another jurisdiction, the distribution of the person's share should be made to the fiduciary.

Money deposited with the county treasurer does not bear interest for the benefit of the distributee. See Gov't Code § 53844 (interest on funds in county treasury credited to general fund of county).

Background on Section 11850 of Repealed Code

Section 11850 was added by 1988 Cal. Stat. ch. 1199 § 91.5. The section superseded portions of former Probate Code Sections 1060 and 1062 (provisions repealed by 1988 Cal. Stat. ch. 1199 § 55.5). For background on the provisions of this part, see the Comment to this part under the part heading.

§ 11851. Deposit of money; sale of personal property and deposit of proceeds

Comment. Section 11851 continues Section 11851 of the repealed Probate Code without change.

Background on Section 11851 of Repealed Code

Section 11851 was added by 1988 Cal. Stat. ch. 1199 § 91.5. The section superseded portions of former Probate Code Sections 1060 and 1062 (provisions repealed by 1988 Cal. Stat. ch. 1199 § 55.5). For background on the provisions of this part, see the Comment to this part under the part heading.

§ 11852. Receipt by county treasurer

Comment. Section 11852 continues Section 11852 of the repealed Probate Code without change. Personal property not ordered sold may be deposited with the State Controller. See Section 11851.

Background on Section 11852 of Repealed Code

Section 11852 was added by 1988 Cal. Stat. ch. 1199 § 91.5. The section restated the last portions of former Probate Code Sections 1060 and 1062 (repealed by 1988 Cal. Stat. ch. 1199 § 55.5), except that the provision for a receipt having the effect of a voucher is not continued. For background on the provisions of this part, see the Comment to this part under the part heading.

§ 11853. Copy of order for distribution

Comment. Section 11853 continues Section 11853 of the repealed Probate Code without change. Personal property not ordered sold may be deposited with the State Controller. See Section 11851.

Background on Section 11853 of Repealed Code

Section 11853 was added by 1988 Cal. Stat. ch. 1199 § 91.5. The section restated former Probate Code Section 1060.1 (repealed by 1988 Cal. Stat. ch. 1199 § 55.5) without substantive change and superseded former Probate Code Section 1224 (repealed by 1987 Cal. Stat. ch. 923 § 59). For background on the provisions of this part, see the Comment to this part under the part heading.

§ 11854. Claim for property deposited in county treasury

Comment. Section 11854 continues Section 11854 of the repealed Probate Code without substantive change. See also Section 11850 (when deposit with county treasurer authorized). Personal property not ordered sold may be deposited with the State Controller. See Section 11851.

Background on Section 11854 of Repealed Code

Section 11854 was added by 1988 Cal. Stat. ch. 1199 § 91.5. The section restated subdivision (a) of former Probate Code Section 1064 (repealed by 1988 Cal. Stat. ch. 1199 § 55.5), but omitted the provisions relating to property other than money deposited with the county treasurer. Such property may be deposited with the State Controller. See Section 11850 (when deposit with county treasurer authorized). Unlike the former provision, Section 11854 provided for an ex parte order with notice to the Attorney General as the court determines, and substituted a court order for the certificate of right. For background on the provisions of this part, see the Comment to this part under the part heading.

CHAPTER 6. DISTRIBUTION TO STATE

§ 11900. Distribution to State of California

Comment. Section 11900 continues Section 11900 of the repealed Probate Code without change. See also Section 7663 (summary disposition of small estate by public administrator; deposit with county treasurer for use in general fund of the county where there are no beneficiaries).

Background on Section 11900 of Repealed Code

Section 11900 was added by 1988 Cal. Stat. ch. 1199 § 91.5. The section restated the last portion of subdivision (a) of former Probate Code Section 1027 (repealed by 1988 Cal. Stat. ch. 1199 § 55.5) without substantive change. For background on the provisions of this part, see the Comment to this part under the part heading.

§ 11901. Distribution in trust for a class

Comment. Section 11901 continues Section 11901 of the repealed Probate Code without change. The title of the state under this section is subject to the right of persons to claim the property as provided in this chapter. See Section 11903 (claims against property distributed to state).

Background on Section 11901 of Repealed Code

Section 11901 was added by 1988 Cal. Stat. ch. 1199 § 91.5. The section restated subdivision (e) of former Probate Code Section 1027 (repealed by 1988 Cal. Stat. ch. 1199 § 55.5) without substantive change. For background on the provisions of this part, see the Comment to this part under the part heading.

§ 11902. Disposition of property distributed to state

Comment. Section 11902 continues Section 11902 of the repealed Probate Code without substantive change.

Background on Section 11902 of Repealed Code

Section 11902 was added by 1988 Cal. Stat. ch. 1199 § 91.5. The section restated without substantive change subdivisions (f) and (g) of former Probate Code Section 1027 and former Probate Code Section 1028 (provisions repealed by 1988 Cal. Stat. ch. 1199 § 55.5). For background on the provisions of this part, see the Comment to this part under the part heading.

§ 11903. Claims against property distributed to state

Comment. Section 11903 continues Section 11903 of the repealed Probate Code without change. Under the general claim procedures of the Code of Civil Procedure, the limitations bar may be tolled as to minors and incompetent persons in some situations. See, e.g., Code Civ. Proc. § 1441.

Background on Section 11903 of Repealed Code

Section 11903 was added by 1988 Cal. Stat. ch. 1199 § 91.5. The section restated subdivisions (i) and (j) of former Probate Code Section 1027 (repealed by 1988 Cal. Stat. ch. 1199 § 55.5) without substantive change. For background on the provisions of this part, see the Comment to this part under the part heading.

§ 11904. No deposit in county treasury

Comment. Section 11904 continues Section 11904 of the repealed Probate Code without change. See also Section 7622 (general rules governing administration of estates apply to public administrator). Section 11904 is intended for the convenience of the claimant of property in only having to deal with one governmental agency. In the case of deposit of distribution of property to the state, money is delivered to the State Treasurer and personal property is delivered to the State Controller. See Section 11902 (disposition of property distributed to state).

Background on Section 11904 of Repealed Code

Section 11904 was added by 1988 Cal. Stat. ch. 1199 § 91.5. The section restated subdivision (h) of former Probate Code Section 1027 (repealed by 1988 Cal. Stat. ch. 1199 § 55.5) without substantive change. For background on the provisions of this part, see the Comment to this part under the part heading.

CHAPTER 7. PARTITION OR ALLOTMENT OF PROPERTY

§ 11950. Right to partition or allotment

Comment. Section 11950 continues Section 11950 of the repealed Probate Code without change. Both real and personal property are subject to division under this chapter. See Section 62 ("property" defined). The partition may affect only interests in the property that are subject to administration. It should be noted that partitioned property

may not be distributed except under the general provisions for distribution.

Background on Section 11950 of Repealed Code

Section 11950 was added by 1988 Cal. Stat. ch. 1199 § 91.5. The section restated former Probate Code Section 1100 (repealed by 1988 Cal. Stat. ch. 1199 § 57), making clear that the partition may affect only interests in the property that are subject to administration. For background on the provisions of this part, see the Comment to this part under the part heading.

§ 11951. Petition

Comment. Section 11951 continues Section 11951 of the repealed Probate Code without substantive change. For general provisions relating to petitions and other papers, see Sections 1020-1023.

Background on Section 11951 of Repealed Code

Section 11951 was added by 1988 Cal. Stat. ch. 1199 § 91.5. The section restated the first and second sentences of former Probate Code Section 1101 (repealed by 1988 Cal. Stat. ch. 1199 § 57) without substantive change, except that the petition may be filed before the time to make claims has expired but may not be filed after an order for distribution has become final. For background on the provisions of this part, see the Comment to this part under the part heading.

§ 11952. Parties and notice

Comment. Section 11952 continues Section 11952 of the repealed Probate Code without change. For general provisions, see Sections 1000-1004 (rules of practice), 1020-1023 (petitions and other papers), 1040-1050 (hearings and orders), 1200-1230 (notice of hearing), 1250-1252 (request for special notice), 1260-1265 (proof of giving of notice).

Background on Section 11952 of Repealed Code

Section 11952 was added by 1988 Cal. Stat. ch. 1199 § 91.5. The section superseded former Probate Code Section 1102 and the third, fourth, and fifth sentences of former Probate Code Section 1101 (provisions repealed by 1988 Cal. Stat. ch. 1199 § 57). For background on the provisions of this part, see the Comment to this part under the part heading.

§ 11953. Disposition of property

Comment. Section 11953 continues Section 11953 of the repealed Probate Code without substantive change.

Background on Section 11953 of Repealed Code

Section 11953 was added by 1988 Cal. Stat. ch. 1199 § 91.5. The section restated former Probate Code Section 1103 (repealed by 1988 Cal. Stat. ch. 1199 § 57) without substantive change. For background on the provisions of this part, see the Comment to this part under the part heading.

§ 11954. Referees

Comment. Section 11954 continues Section 11954 of the repealed Probate Code without change.

Background on Section 11954 of Repealed Code

Section 11954 was added by 1988 Cal. Stat. ch. 1199 § 91.5. The section restated former Probate Code Section 1104 (repealed by 1988 Cal. Stat. ch. 1199 § 57) without substantive change. For background on the provisions of this part, see the Comment to this part under the part heading.

§ 11955. Expenses

Comment. Section 11955 continues Section 11955 of the repealed Probate Code without change.

Background on Section 11955 of Repealed Code

Section 11955 was added by 1988 Cal. Stat. ch. 1199 § 91.5. The section restated former Probate Code Section 1105 (repealed by 1988 Cal. Stat. ch. 1199 § 57), with the addition of the requirement that expenses be specified in the order before they may become a lien on the property. For background on the provisions of this part, see the Comment to this part under the part heading.

§ 11956. Effect of division

Comment. Section 11956 continues Section 11956 of the repealed Probate Code without change.

Background on Section 11956 of Repealed Code

Section 11956 was added by 1988 Cal. Stat. ch. 1199 § 91.5. The section restated former Probate Code Section 1106 (repealed by 1988 Cal. Stat. ch. 1199 § 57) without substantive change. For background on the provisions of this part, see the Comment to this part under the part heading.

CHAPTER 8. INTEREST AND INCOME ACCRUING DURING ADMINISTRATION

Comment. This chapter supersedes Chapter 8 (commencing with Section 12000) of Division 7 of the repealed Probate Code. The superseded chapter was enacted upon recommendation of the California Law Revision Commission. See *Recommendation Relating to Interest and Income During Administration,* 19 Cal. L. Revision Comm'n Reports 1019 (1988). See also *Communication from the California Law Revision Commission Concerning Assembly Bill 2841,* 19 Cal. L. Revision Comm'n Reports 1201, 1246-48 (1988).

The rules of Chapter 8 are incorporated by reference in Section 16314 (interest and income on trust distributions).

§ 12000. Application of chapter

Comment. Section 12000 continues Section 12000 of the repealed Probate Code without change. The language of this section is comparable to that used in Sections 6140(b) and 6165 (rules of construction of wills). This chapter does not apply where the decedent died before July 1, 1989. See Section 12007. As to the application of any amendments made after that date, see Section 3.

Background on Section 12000 of Repealed Code

Section 12000 was added by 1988 Cal. Stat. ch. 1199 § 91.5. The section restated without substantive change former Probate Code Section 660 (added by 1983 Cal. Stat. ch. 842 § 40) and the introductory clause of subdivision (a) of former Probate Code Section 664 (added by 1983 Cal. Stat. ch. 842 § 40) (provisions repealed by 1988 Cal. Stat. ch. 1199 § 52). For background on the provisions of this chapter, see the Comment to this chapter under the chapter heading.

§ 12001. Rate of interest

Comment. Section 12001 restates Section 12001 of the repealed Probate Code without substantive change. This section provides a fixed rate based on the minimum Series EE United States Savings Bond rate in effect one year after the decedent's death, regardless whether interest commences to accrue before, on, or after the one year anniversary. The minimum rate payable on a Series EE United States savings bond may be obtained from a financial institution or from the U.S. Savings Bond Division of the Department of Treasury (1-800-USBONDS). The rule of Section 12001 applies where the intention of the testator is not indicated by the will. See Section 12000. This chapter does not apply where the decedent died before July 1, 1989. See Section 12007. As to the application of any amendments made after that date, see Section 3.

Background on Section 12001 of Repealed Code

Section 12001 was added by 1988 Cal. Stat. ch. 1199 § 91.5. The section superseded portions of subdivisions (a) and (c) of former Probate Code Section 663 (added by 1983 Cal. Stat. ch. 842 § 40 and repealed by 1988 Cal. Stat. ch. 1199 § 52). Under former Section 663, the rate of interest was that payable on a money judgment entered in this state. Section 12001 provides a fixed rate based on the minimum Series EE United States Savings Bond rate in effect one year after the decedent's death, regardless whether interest commences to accrue before, on, or after the one year anniversary. For background on the provisions of this chapter, see the Comment to this chapter under the chapter heading.

§ 12002. Income and expenses of specific devise

Comment. Section 12002 restates Section 12002 of the repealed Probate Code without substantive change. This section applies to specific devises of real and personal property. See Section 32 ("devise" defined). The expenses attributable to the property under subdivision (b) are those relating directly to the property, including maintenance, insurance, property taxes, and income taxes allocable to income from the property. The rule of Section 12002 applies where the intention of the testator is not indicated by the will. See Section 12000.

Subdivision (c) limits the burden on the estate to the first year after the decedent's death. Expenses paid out by the estate after the first year are ultimately borne by the distributee of the property. The equitable lien imposed by subdivision (c) is not good against a transferee of the

property who gives fair consideration for the property without knowledge of the lien. See generally 1 J. Pomeroy, Equity Jurisprudence §§ 165, 168, 171(4) (5th ed. 1941); cf. Section 15685 and the Comment thereto (trustee's lien).

Subdivision (d) is a combination of the rules of subdivision (b) and Section 12003.

This chapter does not apply where the decedent died before July 1, 1989. See Section 12007. As to the application of any amendments made after that date, see Section 3.

Background on Section 12002 of Repealed Code

Section 12002 was a new provision added by 1988 Cal. Stat. ch. 1199 § 91.5. For background on the provisions of this chapter, see the Comment to this chapter under the chapter heading.

Subdivision (a) codified case law. See Estate of McKenzie, 199 Cal. App. 2d 393, 399-400, 18 Cal. Rptr. 680 (1962) (inheritance from another estate).

Subdivision (b) codified case law. See, e.g., In re Estate of Daly, 202 Cal. 284, 287, 260 P. 296 (1927) (stock).

The first sentence of subdivision (c) was consistent with Estate of Reichel, 28 Cal. App. 3d 156, 103 Cal. Rptr. 836 (1972) (where specifically devised real property produces no income but is occupied rent free by the devisee from testator's death, expenses on the property are chargeable to the devisee).

§ 12003. Interest on general pecuniary devise

Comment. Section 12003 continues Section 12003 of the repealed Probate Code without change. The rule of this section applies where the intention of the testator is not indicated by the will. See Section 12000. This chapter does not apply where the decedent died before July 1, 1989. See Section 12007. As to the application of any amendments made after that date, see Section 3.

Background on Section 12003 of Repealed Code

Section 12003 was added by 1988 Cal. Stat. ch. 1199 § 91.5. The section restated subdivision (a) of former Probate Code Section 663 (added by 1983 Cal. Stat. ch. 842 § 40 and repealed by 1988 Cal. Stat. ch. 1199 § 52), except that the rate of interest was specified in Section 12001. For background on the provisions of this chapter, see the Comment to this chapter under the chapter heading.

§ 12004. Interest on annuity

Comment. Section 12004 continues Section 12004 of the repealed Probate Code without change. The rule of this section applies where the intention of the testator is not indicated by the will. See Section 12000. This chapter does not apply where the decedent died before July 1, 1989. See Section 12007. As to the application of any amendments made after that date, see Section 3.

Background on Section 12004 of Repealed Code

Section 12004 was added by 1988 Cal. Stat. ch. 1199 § 91.5. Subdivision (a) restated subdivision (b) of former Probate Code Section 663 (added by 1983 Cal. Stat.

ch. 842 § 40 and repealed by 1988 Cal. Stat. ch. 1199 § 52) without substantive change. Subdivision (b) superseded the portion of subdivision (c) of former Probate Code Section 663 (added by 1983 Cal. Stat. ch. 842 § 40 and repealed by 1988 Cal. Stat. ch. 1199 § 52) that related to annuities. For background on the provisions of this chapter, see the Comment to this chapter under the chapter heading.

§ 12005. Interest on devise for maintenance

Comment. Section 12005 continues Section 12005 of the repealed Probate Code without change. A devise for maintenance, within the meaning of this section, includes a devise for support. The rule of Section 12005 applies where the intention of the testator is not indicated by the will. See Section 12000. This chapter does not apply where the decedent died before July 1, 1989. See Section 12007. As to the application of any amendments made after that date, see Section 3.

Background on Section 12005 of Repealed Code

Section 12005 was added by 1988 Cal. Stat. ch. 1199 § 91.5. The section restated the portion of subdivision (c) of former Probate Code Section 663 (added by 1983 Cal. Stat. ch. 842 § 40 and repealed by 1988 Cal. Stat. ch. 1199 § 52) that related to devises for maintenance. For background on the provisions of this chapter, see the Comment to this chapter under the chapter heading.

§ 12006. Remaining income to residuary or intestate distributees

Comment. Section 12006 continues Section 12006 of the repealed Probate Code without change. The rule of this section applies where the intention of the testator is not indicated by the will. See Section 12000. The rule of this section applies to a person who receives either testate or intestate property. Cf. Section 6148 (failed devise). This chapter does not apply where the decedent died before July 1, 1989. See Section 12007. As to the application of any amendments made after that date, see Section 3.

Background on Section 12006 of Repealed Code

Section 12006 was added by 1988 Cal. Stat. ch. 1199 § 91.5. The section superseded former Probate Code Section 664 (added by 1983 Cal. Stat. ch. 842 § 40 and repealed by 1988 Cal. Stat. ch. 1199 § 52). The former reference to a distribution to a beneficiary in trust as income to the trust was omitted; this matter is governed by Section 16305(a) (California Revised Uniform Principal and Income Act). The reference to intestate property was new and recognized that there may be a partial intestacy in a testate estate. For background on the provisions of this chapter, see the Comment to this chapter under the chapter heading.

§ 12007. Law applicable where decedent died before July 1, 1989

Comment. Section 12007 continues Section 12007 of the repealed Probate Code without substantive change.

Background on Section 12007 of Repealed Code

Section 12007 was a new provision added by 1988 Cal. Stat. ch. 1199 § 91.5. For background on the provisions of this chapter, see the Comment to this chapter under the chapter heading.

PART 11. CLOSING ESTATE ADMINISTRATION

Comment. This part supersedes Part 11 (commencing with Section 12200) of Division 7 of the repealed Probate Code. The superseded part was enacted upon recommendation of the California Law Revision Commission. See *Recommendation Relating to Distribution and Discharge,* 19 Cal. L. Revision Comm'n Reports 953 (1988). See also *Communication from the California Law Revision Commission Concerning Assembly Bill 2841,* 19 Cal. L. Revision Comm'n Reports 1201, 1248 (1988).

CHAPTER 1. TIME FOR CLOSING ESTATE

§ 12200. Time required for closing or status report

Comment. Section 12200 continues Section 12200 of the repealed Probate Code without change.

Background on Section 12200 of Repealed Code

Section 12200 was added by 1988 Cal. Stat. ch. 1199 § 93. The section restated the first sentence of former Probate Code Section 1025.5 (repealed by 1988 Cal. Stat. ch. 1199 § 55.5) without substantive change. For background on the provisions of this part, see the Comment to this part under the part heading.

§ 12201. Report of status of administration

Comment. Section 12201 continues Section 12201 of the repealed Probate Code without change. This section makes specific reference to the availability of an account under Section 10950; however, the court may not order an account under Section 10950 if the waiver or satisfaction provisions of Section 10954 (when account is not required) are satisfied. The report of status of administration must be verified. See Section 1021. For general provisions, see Sections 1000-1004 (rules of practice), 1020-1023 (petitions and other papers), 1040-1050 (hearings and orders), 1200-1230 (notice of hearing), 1250-1252 (request for special notice), 1260-1265 (proof of giving of notice).

Background on Section 12201 of Repealed Code

Section 12201 was added by 1988 Cal. Stat. ch. 1199 § 93. The section restated the second, third, and fourth sentences of former Probate Code Section 1025.5 (repealed by 1988 Cal. Stat. ch. 1199 § 55.5), with the addition of an estimate of the time needed to close administration. The section also superseded a portion of former Probate Code Section 956 ("administration may continue for such time as may be reasonable") (reenacted without change by 1987 Cal. Stat. ch. 923 § 48.5 and repealed by 1988 Cal. Stat. ch. 1199 § 55). For background on the provisions of this part, see the Comment to this part under the part heading.

§ 12202. Failure to petition or make report

Comment. Section 12202 restates Section 12202 of the repealed Probate Code without substantive change. See also Sections 1240-1242 (citations).

Background on Section 12202 of Repealed Code

Section 12202 was added by 1988 Cal. Stat. ch. 1199 § 93. The section restated the second paragraph of former Probate Code Section 1025.5 (repealed by 1988 Cal. Stat. ch. 1199 § 55.5) without substantive change. For background on the provisions of this part, see the Comment to this part under the part heading.

§ 12203. Continuation of administration to pay family allowance

Comment. Section 12203 continues Section 12203 of the repealed Probate Code without change. This section provides standards for the court in determining whether to continue administration of the estate to pay a family allowance. Subdivision (b) makes clear the interrelation between this section and Section 6543 (termination of family allowance).

Background on Section 12203 of Repealed Code

Section 12203 was added by 1988 Cal. Stat. ch. 1199 § 93. Subdivision (a) restated former Probate Code Section 1026 (added by 1983 Cal. Stat. ch. 842 § 43 and repealed by 1988 Cal. Stat. ch. 1199 § 55.5) without substantive change. Subdivisions (b) and (c) were new. For background on the provisions of this part, see the Comment to this part under the part heading.

§ 12204. Failure of personal representative to comply with order

Comment. Section 12204 continues Section 12204 of the repealed Probate Code without change.

Background on Section 12204 of Repealed Code

Section 12204 was added by 1988 Cal. Stat. ch. 1199 § 93. The section restated the third paragraph of former Probate Code Section 1025.5 (repealed by 1988 Cal. Stat. ch. 1199 § 55.5) without substantive change. For background on the provisions of this part, see the Comment to this part under the part heading.

§ 12205. Sanction for failure to timely close estate

Comment. Section 12205 continues Section 12205 of the repealed Probate Code without change. This section does not apply in any proceeding commenced before January 1, 1991. See Section 900. As to the law applicable in a proceeding commenced before January 1, 1991, see Section 900. As to the application of any amendments made after that date, see Section 3.

Background on Section 12205 of Repealed Code

Sectio 12205 was added by 1988 Cal. Stat. ch. 1199 § 93. The section restated the fourth paragraph of former Probate Code Section 1025.5 (repealed by 1988 Cal. Stat. ch. 1199 § 55.5), with the addition of a direction to the court to consider prior delays in setting sanctions. Section 12205 was amended by 1990 Cal. Stat. [AB 831] which made revisions in the section (1) to change "commissions" to "compensation", consistent with the terminology used in Part 7 (commencing with Section 10800) (compensation of personal representative), (2) to substitute a reference to Part 7 which superseded former Section 901, (3) to permit the order authorized by section 12205 to be made at a hearing under Section 9684 to review the compensation of the attorney for the personal representative, (4) to add subdivision (e), and (5) to make other nonsubstantive revisions. See also *Recommendations Relating to Probate Law: Hiring and Paying Attorneys, Advisors, and Others; Compensation of Personal*

Representative, 20 Cal. L. Revision Comm'n Reports 31 (1990) and *Communication from the California Law Revision Commission Concerning Assembly Bill 831*, 20 Cal. L. Revision Comm'n Reports ___ (1990). For background on the provisions of this part, see the Comment to this part under the part heading.

§ 12206. Testamentary limitation of time for administration

Comment. Section 12206 continues Section 12206 of the repealed Probate Code without change.

Background on Section 12206 of Repealed Code

Section 12206 was added by 1988 Cal. Stat. ch. 1199 § 93. The section restated former Probate Code Section 1025 (repealed by 1988 Cal. Stat. ch. 1199 § 55.5) without substantive change. For background on the provisions of this part, see the Comment to this part under the part heading.

CHAPTER 2. DISCHARGE OF PERSONAL REPRESENTATIVE

§ 12250. Order of discharge

Comment. Subdivision (a) of Section 12250 restates Section 12250 of the repealed Probate Code without substantive change. Subdivision (b) codifies existing practice. The estate is fully administered for purposes of this section when all sums of money due from the personal representative have been paid, all property of the estate has been distributed to the persons entitled under court order, and all the acts lawfully required of the personal representative have been performed. As to after-discovered property, see Section 11642.

Background on Section 12250 of Repealed Code

Section 12250 was added by 1988 Cal. Stat. ch. 1199 § 93. The section restated former Probate Code Section 1066 (repealed by 1988 Cal. Stat. ch. 1199 § 55.5), except that the provision for production of vouchers was not continued, and the petition is made ex parte under Section 12250. For background on the provisions of this part, see the Comment to this part under the part heading.

§ 12251. Discharge without administration

Comment. Section 12251 continues Section 12251 of the repealed Probate Code without change. Proceedings may be taken under this section without the return of an inventory provided for by Part 3 (commencing with Section 8800). See subdivision (a) ("at any time"). For general provisions, see Sections 1000-1004 (rules of practice), 1020-1023 (petitions and other papers), 1040-1050 (hearings and orders), 1200-1230 (notice of hearing), 1250-1252 (request for special notice), 1260-1265 (proof of giving of notice).

Background on Section 12251 of Repealed Code

Section 12251 was added by 1988 Cal. Stat. ch. 1199 § 93. The section restated former Probate Code Section 1068 (repealed by 1988 Cal. Stat. ch. 1199 § 55.5), with the addition of subdivision (b). For background on the provisions of this part, see the Comment to this part under the part heading.

§ 12252. Administration after discharge

Comment. Section 12252 restates Section 12252 of the repealed Probate Code without substantive change. As to after-discovered property, see Section 11642. For general provisions, see Sections 1040-1050 (hearings and orders), 1200-1230 (notice of hearing), 1250-1252 (request for special notice), 1260-1265 (proof of giving of notice).

Background on Section 12252 of Repealed Code

Section 12252 was added by 1988 Cal. Stat. ch. 1199 § 93. The section restated former Probate Code Section 1067 (repealed by 1988 Cal. Stat. ch. 1199 § 55.5), conforming the notice provisions to Section 1220. For background on the provisions of this part, see the Comment to this part under the part heading.

PART 12. ADMINISTRATION OF ESTATES OF MISSING PERSONS PRESUMED DEAD

Comment. This part supersedes Part 12 (commencing with Section 12400) of Division 7 of the repealed Probate Code. The superseded part was enacted upon recommendation of the California Law Revision Commission. See *Recommendation Relating to Administration of Estates of Missing Persons,* 19 Cal. L. Revision Comm'n Reports 637 (1988).

§ 12400. "Missing person" defined

Comment. Section 12400 continues Section 12400 of the repealed Probate Code without change.

Background on Section 12400 of Repealed Code

Section 12400 was added by 1987 Cal. Stat. ch. 923 § 93. The section restated former Probate Code Section 1350 (repealed by 1987 Cal. Stat. ch. 923 § 60.7) without substantive change. For background on the provisions of this part, see the Comment to this part under the part heading.

§ 12401. Presumption of death for purposes of administration

Comment. Section 12401 continues Section 12401 of the repealed Probate Code without change. This section is the same in substance as Uniform Probate Code Section 1-107(4) (1987). As to the construction of provisions drawn from uniform acts, see Section 2. See also Evid. Code §§ 667 (general presumption of death), 1282 (finding of presumed death by federal employee).

Background on Section 12401 of Repealed Code

Section 12401 was added by 1987 Cal. Stat. ch. 923 § 93. The section restated former Probate Code Section 1351 (repealed by 1987 Cal. Stat. ch. 923 § 60.7) without substantive change. The language of the standard as stated in Section 12401 was revised for consistency with Section 12404. For background on the provisions of this part, see the Comment to this part under the part heading.

§ 12402. Manner of administration of missing person's estate

Comment. Section 12402 continues Section 12402 of the repealed Probate Code without change. The time limitations on preliminary and final distribution apply to distribution under this part. See also Section 12408 (recovery of property by missing person upon reappearance).

Background on Section 12402 of Repealed Code

Section 12402 was added by 1987 Cal. Stat. ch. 923 § 93. The section restated former Probate Code Section 1352 (repealed by 1987 Cal. Stat. ch. 923 § 60.7) without substantive change, except that the one-year delay of distribution was not continued. Under Section 12402, the general limitations on distribution of estates apply. The reference to distribution of the estate in former Section 1352 also was omitted from Section 12402; distribution is included in the process of administration under Section 12402. For background on the provisions of this part, see the Comment to this part under the part heading.

§ 12403. Jurisdiction of court

Comment. Section 12403 continues Section 12403 of the repealed Probate Code without change.

Background on Section 12403 of Repealed Code

Section 12403 was added by 1987 Cal. Stat. ch. 923 § 93. The section restated former Probate Code Section 1353 (repealed by 1987 Cal. Stat. ch. 923 § 60.7) without substantive change. For background on the provisions of this part, see the Comment to this part under the part heading.

§ 12404. Petition for administration

Comment. Section 12404 continues Section 12404 of the repealed Probate Code without substantive change. Subdivision (b) does not affect the order of priority of appointment of an administrator; this is controlled by provisions governing administration generally. However, a person who qualifies for appointment as a personal representative only as "[a]ny other person" under subdivision (r) of Section 8461 may not petition under Section 12404; only persons who fall into some other category listed in Section 8461 may petition. Pursuant to subdivision (c) of Section 12404 and Section 12402, the general requirements for a petition for administration of the estate apply to proceedings under this part. For general provisions relating to petitions, see Sections 1020-1023.

Background on Section 12404 of Repealed Code

Section 12404 was added by 1987 Cal. Stat. ch. 923 § 93 and was amended by 1988 Cal. Stat. ch. 1199 § 93.5. The section as enacted restated subdivisions (a) to (c) of former Probate Code Section 1354 (repealed by 1987 Cal. Stat. ch. 923 § 60.7) without substantive change, except as noted below:

(1) The reference to probate of the will in former Section 1354(a) was omitted from Section 12404 as surplus.

(2) The list of persons who could petition under former Section 1354(b) was revised in Section 12404 to incorporate the list of persons who may be appointed as personal representative. This revision made clear that a petition may be filed by persons such as the public administrator or a creditor. See Section 8461(p) (public administrator) and (q)(creditors). However, this revision did not permit a person who qualified for appointment as a personal representative only as a "person legally competent" under paragraph (12) of subdivision (a) of former Probate Code Section 422 (repealed by 1988 Cal. Stat. ch. 1199 § 45) (now "[a]ny other person" under subdivision (r) of Section 8461), to petition under Section 12404; only persons who fall into some other category could petition.

(3) The requirement of Section 12404 that the petitioner give the last known address of the missing person in subdivision (c)(1) was new. Subdivision (c)(2) of Section 12404 was revised for consistency with subdivision (c)(3). Subdivision (c)(3) of Section 12404 was revised to eliminate the need to identify the persons most likely to know the whereabouts of the missing person. The reference in Section 12404 to seeing the missing person was new, but made no substantive change.

For background on the provisions of this part, see the Comment to this part under the part heading.

The 1988 amendment corrected a reference to another statutory provision.

§ 12405. Notice of hearing

Comment. Section 12405 continues Section 12405 of the repealed Probate Code without change. See also Sections 5 (use of certified mail satisfies registered mail requirement), 1260-1265 (proof of giving of notice).

Background on Section 12405 of Repealed Code

Section 12405 was added by 1987 Cal. Stat. ch. 923 § 93. The section replaced former Probate Code Section 1355 (repealed by 1987 Cal. Stat. ch. 923 § 60.7). Under Section 12405, the hearing was no longer delayed for three months nor was publication required for 90 days before the hearing. For background on the provisions of this part, see the Comment to this part under the part heading.

§ 12406. Determination whether person is person presumed to be dead; search for missing person

Comment. Section 12406 continues Section 12406 of the repealed Probate Code without change. Subdivision (c) makes the estate presumptively liable for costs, but gives the court discretion to order the petitioner to pay costs if there is no administration. For general provisions, see Sections 1000-1004 (rules of practice), 1040-1050 (hearings and orders).

Background on Section 12406 of Repealed Code

Section 12406 was added by 1987 Cal. Stat. ch. 923 § 93. Subdivisions (a) and (b) restated subdivisions (a) and (b) of former Probate Code Section 1356 (repealed by 1987 Cal. Stat. ch. 923 § 60.7) without substantive change. The word "reasonably" which preceded "diligent search" under former Section 1356(b) was omitted, but this was not a substantive change. The court has the authority to order a search that is appropriate under the circumstances of the case. The reference in subdivision (b)(1) of Section 12406 to newspapers was new; this was not a substantive change.

Subdivision (c) gives the court discretion to order the petitioner to pay costs if there is no administration. Subdivision (c) of former Section 1356 required that costs be paid by the petitioner if there was no administration.

For background on the provisions of this part, see the Comment to this part under the part heading.

§ 12407. Appointment of personal representative and determination of date of disappearance

Comment. Section 12407 continues Section 12407 of the repealed Probate Code without change. See also Sections 12401 (death presumed at end of five-year period unless sufficient evidence of earlier death), 12402 (manner of administration and distribution).

Background on Section 12407 of Repealed Code

Section 12407 was added by 1987 Cal. Stat. ch. 923 § 93. The section restated former Probate Code Section 1357 (repealed by 1987 Cal. Stat. ch. 923 § 60.7) without substantive change. For background on the provisions of this part, see the Comment to this part under the part heading.

§ 12408. Recovery of property by missing person upon reappearance

Comment. Section 12408 continues Section 12408 of the repealed Probate Code without change.

Subdivisions (a) and (b) are drawn from the last paragraph of Section 3-412 of the Uniform Probate Code (1987), but a provision is added barring an action under paragraph (a)(2) five years after distribution under Section 12407(b). As to the construction of provisions drawn from uniform acts, see Section 2.

Subdivision (c) is consistent with Section 11605 (effect of an order for final distribution in probate proceedings generally). Subdivision (c) permits a distributee to convey good title to property of the missing person before the time an action by the missing person against the distributee would be barred under subdivision (a)(2). This is because subdivision (c) provides a rule that the order for final distribution, when it becomes final, is conclusive as to the rights of the missing person. The exception to this rule in subdivision (a)(2) is limited to property in the hands of the distributee or the value of distributions received by the distributee; subdivision (a)(2) does not permit an action against the person to whom the property has been transferred by the distributee. Where a distributee has encumbered property of the missing person, the lender likewise would be protected under subdivision (c); but, if the action of the missing person is not barred under subdivision (a)(2), the reappearing missing person might recover from the distributee the property, subject to the encumbrance.

Background on Section 12408 of Repealed Code

Section 12408 was added by 1987 Cal. Stat. ch. 923 § 93 and was amended by 1988 Cal. Stat. ch. 1199 § 94. The section restated former Probate Code Section 1358 (repealed by 1987 Cal. Stat. ch. 923 § 60.7) without substantive change, except that the five-year period under Section 12408 ran from the time of distribution rather than the time of the petition and the term "beneficiaries" was substituted for "heirs, devisees, and legatees." For background on the provisions of this part, see the Comment to this part under the part heading.

The provision barring an action under paragraph (a)(2) of Section 12408 five years after distribution under Section 12404 continued the general effect of the parts of former Probate Code Sections 287-292 (the statute in effect before former Sections 1350-1359 and which was repealed by 1983 Cal. Stat. ch. 201 § 3) that gave a distribution conclusive effect after the missing person had been missing 10 years.

Subdivision (d) of Section 12408 restated former Section 1358(d) without substantive change, but was revised to make clear that the restrictions on the time of filing a petition under Section 1080 do not apply under this part.

The 1988 amendment corrected references to other statutory provisions.

PART 13. NONDOMICILIARY DECEDENTS

Comment. This part supersedes Part 13 (commencing with Section 12500) of Division 7 of the repealed Probate Code. The superseded part was enacted upon recommendation of the California Law Revision Commission. See *Recommendation Relating to Nondomiciliary Decedents,* 19 Cal. L. Revision Comm'n Reports 993 (1988).

CHAPTER 1. DEFINITIONS

§ 12500. Application of definitions

Comment. Section 12500 continues Section 12500 of the repealed Probate Code without change. This section is comparable to Section 20.

Background on Section 12500 of Repealed Code

Section 12500 was a new provision added by 1988 Cal. Stat. ch. 1199 § 94.5. For background on the provisions of this part, see the Comment to this part under the part heading.

§ 12501. Ancillary administration

Comment. Section 12501 continues Section 12501 of the repealed Probate Code without change.

Background on Section 12501 of Repealed Code

Section 12501 was a new provision added by 1988 Cal. Stat. ch. 1199 § 94.5. For background on the provisions of this part, see the Comment to this part under the part heading.

§ 12502. Foreign nation

Comment. Section 12502 continues Section 12502 of the repealed Probate Code without change. "State" is defined in Section 74 as "any state of the United States, the District of Columbia, the Commonwealth of Puerto Rico, and any territory or possession subject to the legislative

authority of the United States." See also 28 U.S.C. § 1738 (1982) (implementing the full faith and credit clause of the U.S. Constitution).

Background on Section 12502 of Repealed Code

Section 12502 was a new provision added by 1988 Cal. Stat. ch. 1199 § 94.5. For background on the provisions of this part, see the Comment to this part under the part heading.

§ 12503. Foreign nation personal representative

Comment. Section 12503 continues Section 12503 of the repealed Probate Code without change.

Background on Section 12503 of Repealed Code

Section 12503 was a new provision added by 1988 Cal. Stat. ch. 1199 § 94.5. For background on the provisions of this part, see the Comment to this part under the part heading.

§ 12504. Local personal representative

Comment. Section 12504 continues Section 12504 of the repealed Probate Code without change.

Background on Section 12504 of Repealed Code

Section 12504 was a new provision added by 1988 Cal. Stat. ch. 1199 § 94.5. For background on the provisions of this part, see the Comment to this part under the part heading.

§ 12505. Nondomiciliary decedent

Comment. Section 12505 continues Section 12505 of the repealed Probate Code without change. The term "nondomiciliary decedent" is not limited to a decedent who dies domiciled in a sister state (defined in Section 12506), but also includes a decedent who dies domiciled in a foreign nation (defined in Section 12502). However, some provisions of this part apply only to nondomiciliary decedents who die domiciled in a sister state. See Sections 12540-12541 (distribution of property to sister state personal representative), 12570-12572 (collection of personal property of small estate without ancillary administration).

Background on Section 12505 of Repealed Code

Section 12505 was a new provision added by 1988 Cal. Stat. ch. 1199 § 94.5. For background on the provisions of this part, see the Comment to this part under the part heading.

§ 12506. Sister state

Comment. Section 12506 continues Section 12506 of the repealed Probate Code without change.

Background on Section 12506 of Repealed Code

Section 12506 was a new provision added by 1988 Cal. Stat. ch. 1199 § 94.5. For background on the provisions of this part, see the Comment to this part under the part heading.

§ 12507. Sister state personal representative

Comment. Section 12507 continues Section 12507 of the repealed Probate Code without change.

Background on Section 12507 of Repealed Code

Section 12507 was a new provision added by 1988 Cal. Stat. ch. 1199 § 94.5. For background on the provisions of this part, see the Comment to this part under the part heading.

CHAPTER 2. ANCILLARY ADMINISTRATION

Article 1. Opening Ancillary Administration

§ 12510. Commencement of proceedings

Comment. Section 12510 continues Section 12510 of the repealed Probate Code without change. As used in Section 12510, "interested person" includes the person named as executor in the decedent's will. See Section 48. For the proper court, see Section 12511 (venue).

Background on Section 12510 of Repealed Code

Section 12510 was added by 1988 Cal. Stat. ch. 1199 § 94.5. The section superseded former Probate Code Section 360 and continued part of the first sentence of former Probate Code Section 361 without substantive change. Former Sections 360 and 361 were repealed by 1988 Cal. Stat. ch. 1199 § 40. For background on the provisions of this part, see the Comment to this part under the part heading.

§ 12511. Venue

Comment. Section 12511 continues Section 12511 of the repealed Probate Code without change. This section incorporates the nondomiciliary venue provision of Section 7052. See also Section 7050 (jurisdiction and authority of court or judge).

Background on Section 12511 of Repealed Code

Section 12511 was added by 1988 Cal. Stat. ch. 1199 § 94.5. The section restated the last part of former Probate Code Section 360 (repealed by 1988 Cal. Stat. ch. 1199 § 40) without substantive change. For background on the provisions of this part, see the Comment to this part under the part heading.

§ 12512. Procedure

Comment. Section 12512 continues Section 12512 of the repealed Probate Code without change. See also Section 12530 (application of general provisions).

Background on Section 12512 of Repealed Code

Section 12512 was added by 1988 Cal. Stat. ch. 1199 § 94.5. The section restated the last sentence of former Probate Code Section 361 (repealed by 1988 Cal. Stat. ch. 1199 § 40) without substantive change. For background on the provisions of this part, see the Comment to this part under the part heading.

§ 12513. Preference for appointment as local personal representative

Comment. Section 12513 continues Section 12513 of the repealed Probate Code without change. This section is drawn from Section

3–203(g) of the Uniform Probate Code (1987). As to the construction of provisions drawn from uniform acts, see Section 2. This section applies only where the nondomiciliary decedent has died while domiciled in a sister state, not where a person was domiciled in a foreign nation. Consequently, only sister state personal representatives, not foreign nation personal representatives, are entitled to the priority provided in this section. Section 12513 deals only with priority; the sister state personal representative must still qualify for appointment pursuant to Section 8400 et seq.

Background on Section 12513 of Repealed Code

Section 12513 was a new provision added by 1988 Cal. Stat. ch. 1199 § 94.5. For background on the provisions of this part, see the Comment to this part under the part heading.

Article 2. Probate of Nondomiciliary Decedent's Will Admitted to Probate in Sister State or Foreign Nation

§ 12520. Proceedings governed by this article

Comment. Section 12520 continues Section 12520 of the repealed Probate Code without change. Subdivision (a) makes clear that the procedure of this article applies only where a sister state or foreign nation order admitting a will to probate satisfies the requirements of Sections 12522 or 12523. As provided in subdivision (b), the general provisions concerning opening administration apply where the sister state or foreign nation order is not entitled to recognition. See Section 8000 et seq. The general provisions also apply in any case where admission has not been sought in the sister state or foreign nation. See also Section 6113 (choice of law as to execution of will).

Background on Section 12520 of Repealed Code

Section 12520 was a new provision added by 1988 Cal. Stat. ch. 1199 § 94.5. For background on the provisions of this part, see the Comment to this part under the part heading.

§ 12521. Petition for probate of nondomiciliary decedent's will

Comment. Section 12521 continues Section 12521 of the repealed Probate Code without change. For the persons who may petition under Section 12521, see Section 12510. For general provisions relating to petitions, see Sections 1020-1023.

Background on Section 12521 of Repealed Code

Section 12521 was added by 1988 Cal. Stat. ch. 1199 § 94.5. The section superseded part of the first sentence of former Probate Code Section 361 (repealed by 1988 Cal. Stat. ch. 1199 § 40). For background on the provisions of this part, see the Comment to this part under the part heading.

§ 12522. Will admitted to probate in sister state

Comment. Section 12522 continues Section 12522 of the repealed Probate Code without substantive change. This section presumes a sister state order admitting a will to probate to be valid. The burden is on an opponent of the will to show that the order is not entitled to full faith and credit in this state.

Background on Section 12522 of Repealed Code

Section 12522 was added by 1988 Cal. Stat. ch. 1199 § 94.5. The section superseded former Probate Code Section 362 (repealed by 1988 Cal. Stat. ch. 1199 § 40) to the extent that former Section 362 applied to wills admitted to probate in sister states. The provision of former Section 362 that the will must be valid under the law of the testator's domicile at death or under the law of this state was not continued in Section 12522. For rules governing the validity of a will first offered for probate in this state, see Section 6113. For background on the provisions of this part, see the Comment to this part under the part heading.

§ 12523. Will admitted to probate in foreign nation

Comment. Section 12523 continues Section 12523 of the repealed Probate Code without change. Under subdivision (a), the proponent of the will admitted in the foreign nation has the burden of showing that the specified conditions are satisfied. Subdivision (b) is drawn from the Uniform Foreign Money-Judgments Recognition Act § 4(a)(1), 13 U.L.A. (1962 & Supp. 1989). As to the construction of provisions drawn from uniform acts, see Section 2. See Code Civ. Proc. § 1713.4(a)(1) (recognition of foreign nation money judgments).

Background on Section 12523 of Repealed Code

Section 12523 was added by 1988 Cal. Stat. ch. 1199 § 94.5. The section superseded former Probate Code Section 362 (repealed by 1988 Cal. Stat. ch. 1199 § 40) to the extent that it applied to wills admitted to probate in foreign nations. The provision of former Section 362 that the will must be valid under the law of the testator's domicile at death or under the law of this state was not continued in Section 12523. For rules governing the validity of a will first offered for probate in this state, see Section 6113. For background on the provisions of this part, see the Comment to this part under the part heading.

§ 12524. Effect of admission of nondomiciliary decedent's will

Comment. Section 12524 continues Section 12524 of the repealed Probate Code without change.

Background on Section 12524 of Repealed Code

Section 12524 was added by 1988 Cal. Stat. ch. 1199 § 94.5. The section restated part of former Probate Code Section 362 (repealed by 1988 Cal. Stat. ch. 1199 § 40) without substantive change. For background on the provisions of this part, see the Comment to this part under the part heading.

Article 3. Application of General Provisions

§ 12530. Applicability of general provisions relating to estate administration

Comment. Section 12530 continues Section 12530 of the repealed Probate Code without change. This section makes clear that the general provisions relating to estate administration apply to administration under this chapter, except as otherwise provided. For exceptions, see, e.g., Section 12540 (conditions for distribution to sister state personal representative).

Background on Section 12530 of Repealed Code

Section 12530 was a new provision added by 1988 Cal. Stat. ch. 1199 § 1.5. The section was amended by 1989 Cal. Stat. ch. 21 § 30 to make clear that the section applies in estate administration proceedings throughout the code, whether pursuant to this division or any other division of the code. For background on the provisions of this part, see the Comment to this part under the part heading.

Article 4. Distribution of Property to Sister State Personal Representative

§ 12540. Order for distribution to sister state personal representative

Comment. Section 12540 continues Section 12540 of the repealed Probate Code without change. This procedure applies only where the nondomiciliary decedent has died while domiciled in a sister state, not where the decedent died domiciled in a foreign nation. Consequently, distribution may be made to a sister state personal representative under this article, but not to a foreign nation personal representative.

Under Section 12540 a petition may be made by the local personal representative, a beneficiary, or other interested person. See Section 11600. Notice of the hearing on the petition is given in the manner provided in Section 1220. Any interested person may oppose the petition. See Section 11602 (opposition to petition). Preliminary distribution may not be ordered unless two months have elapsed and distribution may be made without loss to creditors or injury to the estate or any interested person. See Sections 11620 (time for petition), 11621 (order for distribution). Final distribution may not be ordered unless the estate is in a condition to be closed. See Section 11640 (petition and order). For general provisions, see Sections 1000-1004 (rules of practice), 1040-1050 (hearings and orders). Distribution in compliance with the court order entitles the local personal representative to a full discharge, and when the order becomes final it is conclusive against all interested persons. See Sections 11753 (filing receipts and discharge), 11605 (conclusiveness of order).

It should be noted that distribution may be made to a sister state personal representative in ancillary administration only upon a court determination that the distribution is in the best interest of the estate or interested persons. In other cases, distribution is made directly to the beneficiaries. See In re Estate of Hudson, 63 Cal. 454 (1883); Durham, *Ancillary Administration,* in 3 California Decedent Estate Practice § 33.50 (Cal. Cont. Ed. Bar 1987 & rev. 1988).

Background on Section 12540 of Repealed Code

Section 12540 was added by 1988 Cal. Stat. ch. 1199 § 94.5. The section superseded parts of former Probate Code Section 1000, part of the first sentence of former Probate Code Section 1040, the last sentence of former Probate Code Section 1041, and former Probate Code Section 1042 (provisions repealed by 1988 Cal. Stat. ch. 1199 § 55.5). For background on the provisions of this part, see the Comment to this part under the part heading.

§ 12541. Sale of real property and distribution of proceeds

Comment. Section 12541 continues Section 12541 of the repealed Probate Code without change. This section is an exception to the normal rule where distribution is made to the beneficiaries. See Section 12530 (application of general provisions, including distribution rules). This section does not limit authority the sister state personal representative may have under the Independent Administration of Estates Act. See Sections 10400-10592.

Background on Section 12541 of Repealed Code

Section 12541 was added by 1988 Cal. Stat. ch. 1199 § 94.5. The section superseded the last part of the first sentence and all of the second sentence of former Probate Code Section 1040 (repealed by 1988 Cal. Stat. ch. 1199 § 55.5). Section 12541 broadened the former provisions so that the court may order a sale of real property of the estate in the course of either preliminary or final distribution. For background on the provisions of this part, see the Comment to this part under the part heading.

§ 12542. Distribution where estate in sister state is insolvent

Comment. Section 12542 continues Section 12542 of the repealed Probate Code without change.

Background on Section 12542 of Repealed Code

Section 12542 was a new provision added by 1988 Cal. Stat. ch. 1199 § 94.5. For background on the provisions of this part, see the Comment to this part under the part heading.

CHAPTER 3. COLLECTION OF PERSONAL PROPERTY OF SMALL ESTATE BY SISTER STATE PERSONAL REPRESENTATIVE WITHOUT ANCILLARY ADMINISTRATION

§ 12570. Collection of personal property of small estate without ancillary administration

Comment. Section 12570 continues Section 12570 of the repealed Probate Code without change. This section permits a sister state personal representative to collect personal property of a small estate by using the affidavit procedure set out in Sections 13100-13115. The sister state personal representative is a successor in interest for this purpose. See Section 13051(d). The affidavit procedure for collecting real property (Sections 13200-13208) is not available to the sister state personal representative. However, the beneficiaries may employ the affidavit procedure even though the sister state personal representative may not. Where the estate in California does not qualify for collection under Section 13100 or where real property is involved, the sister state personal representative must use other procedures. The simplified affidavit procedure under this chapter applies where the value of the property in this state does not exceed $60,000 (as determined pursuant to Sections 13050 and 13100). Transfer to the sister state personal representative under this procedure results in a transfer for the purposes of administration, whereas the general affidavit procedure results in transfer to the ultimate beneficiaries. This procedure is not available to foreign nation personal representatives. See Section 12507 ("sister state personal representative" defined).

Background on Section 12570 of Repealed Code

Section 12570 was a new provision added by 1988 Cal. Stat. ch. 1199 § 94.5. For background on the provisions of this part, see the Comment to this part under the part heading.

§ 12571. Payment, delivery, or transfer of property to sister state personal representative

Comment. Section 12571 continues Section 12571 of the repealed Probate Code without change. This section makes clear that the rules concerning the effect of compliance with the affidavit procedure or refusal to comply are the same where the procedure is used by a sister state personal representative.

Background on Section 12571 of Repealed Code

Section 12571 was a new provision added by 1988 Cal. Stat. ch. 1199 § 94.5. For background on the provisions of this part, see the Comment to this part under the part heading.

§ 12572. Action against holder of property to compel payment, delivery, or transfer

Comment. Section 12572 continues Section 12572 of the repealed Probate Code without change. This section provides an exception to the general rule that a sister state personal representative may not bring an action in this state. See Code Civ. Proc. § 1913. Where property has been transferred to a successor by affidavit, the sister state personal representative does not have the power to bring an action under Section 13111(d) unless the sister state personal representative is appointed as the local personal representative in ancillary administration.

Background on Section 12572 of Repealed Code

Section 12572 was a new provision added by 1988 Cal. Stat. ch. 1199 § 94.5. For background on the provisions of this part, see the Comment to this part under the part heading.

§ 12573. Liability of sister state personal representative who takes property under this chapter

Comment. Section 12573 continues Section 12573 of the repealed Probate Code without change. This section provides a special rule governing the liability of a sister state personal representative who takes personal property by an affidavit under this chapter. Under this section, the sister state personal representative is liable to creditors under Section 13110 or to heirs or devisees under Section 13111 only if the property collected by affidavit is not put in the estate for purposes of administration in the sister state.

Background on Section 12573 of Repealed Code

Section 12573 was a new provision added by 1988 Cal. Stat. ch. 1199 § 94.5. For background on the provisions of this part, see the Comment to this part under the part heading.

CHAPTER 4. JURISDICTION OVER FOREIGN PERSONAL REPRESENTATIVE

§ 12590. Jurisdiction by act of foreign personal representative

Comment. Section 12590 continues Section 12590 of the repealed Probate Code without change. This section is drawn from Section 4-301 of the Uniform Probate Code (1987). As to the construction of provisions drawn from uniform acts, see Section 2.

Background on Section 12590 of Repealed Code

Section 12590 was a new provision added by 1988 Cal. Stat. ch. 1199 § 94.5. For background on the provisions of this part, see the Comment to this part under the part heading.

§ 12591. Jurisdiction by act of decedent

Comment. Section 12591 continues Section 12591 of the repealed Probate Code without change. This section is drawn from Section 4-302 of the Uniform Probate Code (1987) and is consistent with Section 410.10 of the Code of Civil Procedure and with case law. See Mitsui Manufacturers Bank v. Tucker, 152 Cal. App. 3d 428, 199 Cal. Rptr. 517 (1984). As to the construction of provisions drawn from uniform acts, see Section 2. Nothing in this section excuses a creditor from compliance with any applicable creditor claim requirements in ancillary administration proceedings.

Background on Section 12591 of Repealed Code

Section 12591 was a new provision added by 1988 Cal. Stat. ch. 1199 § 94.5. For background on the provisions of this part, see the Comment to this part under the part heading.

DIVISION 8. DISPOSITION OF ESTATE WITHOUT ADMINISTRATION

Comment. This division supersedes Division 8 (commencing with Section 13000) of the repealed Probate Code. The superseded division was enacted upon recommendation of the California Law Revision Commission. See *Recommendation Relating to Distribution of Estate Without Administration,* 18 Cal. L. Revision Comm'n Reports 1005 (1986); *Communication from California Law Revision Commission Concerning Assembly Bill 2625,* 18 Cal. L. Revision Comm'n Reports 1743 (1986). The Commission, in cooperation with California Continuing Education of the Bar, published the recommended legislation as enacted with official comments. See *Selected 1986 Trust and Probate Legislation,* 18 Cal. L. Revision Comm'n Reports 1201, 1503-96 (1986).

Legislation enacted to effectuate an earlier Commission recommendation made significant improvements in the law relating to the distribution of estates without administration. See *Recommendation Relating to Distribution of Estates Without Administration,* 17 Cal. L. Revision Comm'n Reports 421 (1984). See also *Report of Senate Committee on Judiciary on Assembly Bill 2270,* 18 Cal. L. Revision Comm'n Reports 63, 64-65 (1986).

PART 1. COLLECTION OR TRANSFER OF SMALL ESTATE WITHOUT ADMINISTRATION

CHAPTER 1. DEFINITIONS

§ 13000. Construction of words and phrases

Comment. Section 13000 continues Section 13000 of the repealed Probate Code without substantive change.

Background on Section 13000 of Repealed Code

Section 13000 was a new provision added by 1986 Cal. Stat. ch. 783 § 24. For background on the provisions of this division, see the Comment to this division under the division heading.

§ 13002. Holder of the decedent's property

Comment. Section 13002 continues Section 13002 of the repealed Probate Code without change. A person owing money to the decedent includes a financial institution. See Section 56 (defining "person").

Background on Section 13002 of Repealed Code

Section 13002 was added by 1986 Cal. Stat. ch. 783 § 24. The section was drawn from language of a portion of subdivision (b) of former Probate Code Section 630 (repealed by 1986 Cal. Stat. ch. 783 § 9). For background on the provisions of this division, see the Comment to this division under the division heading.

§ 13004. Particular item of property

Comment. Section 13004 continues Section 13004 of the repealed Probate Code without change. The definition provided by Section 13004, together with the definition of "successor of the decedent" in Section 13006, requires that an affidavit or declaration be executed by all of the persons who succeed to the particular property sought to be collected, received, or transferred (see Sections 13100, 13101, 13200) and that a petition be verified by all of the persons who succeed to the particular real property that is the subject of the petition (see Sections 13151-13152).

Background on Section 13004 of Repealed Code

Section 13004 was a new provision added by 1986 Cal. Stat. ch. 783 § 24. For background on the provisions of this division, see the Comment to this division under the division heading.

§ 13006. Successor of the decedent

Comment. Section 13006 continues Section 13006 of the repealed Probate Code without change. A guardian, conservator, custodian, or attorney-in-fact may act on behalf of the person entitled to the property. See Section 13051. A trustee of a trust *created by the will of the decedent* is not a beneficiary under the decedent's will for the purposes of this part. Only the trustee of a trust created during the decedent's lifetime that is entitled to all or a portion of the decedent's property may act as a successor of the decedent under this part. See the Comment to Section 13051; see also the Comment to Section 13004. See also Sections 12570-12573 (collection of personal property of small estate by sister state personal representative without ancillary administration).

Background on Section 13006 of Repealed Code

Section 13006 was added by 1986 Cal. Stat. ch. 783 § 24 and was amended by 1988 Cal. Stat. ch. 1199 § 95. Subdivision (a) was drawn from portions of subdivision (b) of former Probate Code Section 630 (repealed by 1986 Cal. Stat. ch. 783 § 9). Subdivision (b) expanded the provision of subdivision (b) of former Section 630 to include all persons who succeeded to a particular item of property of the decedent under Sections 6401 and 6402 (intestate succession). Former Section 630 limited the heirs who could use the former summary affidavit procedure to the following relatives of the decedent: surviving spouse, children, issue of deceased children, parents, brothers or sisters, issue of deceased brothers or sisters, and grandparents. Under subdivision (b) of Section 13006, the persons who can use the summary provisions of this part are not so limited. For background on the provisions of this division, see the Comment to this division under the division heading.

The 1988 amendment revised subdivision (b) to cover the situation where the succession to property is governed by the law of a jurisdiction other than California. See Sections 12502 ("foreign nation" defined), 12506 ("sister state" defined). For background on the 1988 amendment, see *Comments to Conforming Revisions and Repeals*, 19 Cal. L. Revision Comm'n Reports 1031, 1094 (1988).

CHAPTER 2. GENERAL PROVISIONS

§ 13050. Exclusions in determining property or estate of decedent or its value

Comment. Section 13050 continues Section 13050 of the repealed Probate Code without substantive change.

The exclusion for an interest that terminates at death under subdivision (a)(1) embraces life interests in trusts and contractual rights (such as insurance and employee retirement or death benefits) that terminate at death, as well as life interests in other property.

Paragraph (2) of subdivision (a) is a special application of paragraph (1) of subdivision (a). Paragraph (2) excludes multiple-party account funds, whether or not they are community property under Section 5305, to the extent that the funds pass to a surviving party, P.O.D. payee, or beneficiary. To the extent that the funds do not belong after the death of the decedent to a surviving party, P.O.D. payee, or beneficiary, the funds are includable in the decedent's estate for the purpose of this part.

The state registered property excluded under subdivision (b) can be transferred without probate under special statutory provisions. See Health & Safety Code § 18102 (manufactured homes, mobilehomes, commercial coaches, truck campers, and floating homes); Veh. Code §§ 5910 (vehicles), 9916 (vessels).

Although the salary exclusion under subdivision (c) does not prevent the use of the affidavit procedure under Sections 13100-13115 to collect salary owed to the decedent, other procedures for collection of the salary owed to the decedent may be available. See, e.g., Gov't Code §§ 12479 (designation by state employee of person to receive warrants upon employee's death), 53245 (designation by public employee of person to receive warrants upon employee's death). See also Prob. Code §§ 5000 (payment of money due to decedent to person designated by decedent), 13600 (collection by surviving spouse of compensation, not exceeding $5,000, owed by employer to decedent).

Background on Section 13050 of Repealed Code

Section 13050 was added by 1986 Cal. Stat. ch. 783 § 24 and amended by 1989 Cal. Stat. ch. 397 § 39. Paragraph (1) of subdivision (a) continued former Probate Code Section 632 (repealed by 1986 Cal. Stat. ch. 783 § 9) without substantive change. Paragraph (2) of subdivision (a) was new and was the same in substance as subdivision (b) of former Probate Code Section 647 (repealed by 1986 Cal. Stat. ch. 783 § 9). Paragraph (2) made clear that funds in a multiple-party account as defined in Section 5101 were excluded in determining the property or estate of the decedent or its value to the extent that the funds belong after the death of the decedent to a surviving party, P.O.D. payee, or beneficiary. Under former Section 632 (repealed by 1986 Cal. Stat. ch. 783 § 9, now paragraph (1) of subdivision (a) of Section 13050), joint tenancy accounts were expressly excluded from the decedent's estate, and Totten trust accounts

and P.O.D. accounts were presumably also excluded as an estate terminable upon the decedent's death.

Subdivision (b) continued the portion of subdivision (a) of former Probate Code Section 630 (repealed by 1986 Cal. Stat. ch. 783 § 9) that excluded certain state registered property in determining the estate or its value with the addition of "floating home" in paragraph (3). This addition reflected the 1985 amendment to Section 18102 of the Health and Safety Code which added "floating homes" to the kinds of property which can be transferred without administration under that section. See 1985 Cal. Stat. ch. 1467, § 27.

Subdivision (c) continued without substantive change the portion of subdivision (a) of former Section 630 (repealed by 1986 Cal. Stat. ch. 783 § 9) that provided a salary exclusion in determining the value of the decedent's property.

The 1989 amendment substituted a correct reference for the former reference to Section 5101. See *Recommendation Relating to Multiple-Party Accounts in Financial Institutions*, 20 Cal. L. Revision Comm'n Reports 95 (1990).

For background on the provisions of this division, see the Comment to this division under the division heading.

§ 13051. Authority of guardian, conservator, trustee, custodian, foreign personal representative, or attorney-in-fact

Comment. Section 13051 continues Section 13051 of the repealed Probate Code with two additions:

(1) A sentence is added to subdivision (b) to make clear that a trustee may act without court approval, even though the trust is subject to the continuing jurisdiction of the court.

(2) Subdivision (e) has been added to make clear that an attorney in fact authorized under a durable power of attorney may act on behalf of the beneficiary giving the power of attorney.

Under subdivision (b), the trustee must be the trustee of a living trust created by the decedent or by another during the decedent's lifetime or the trustee of a testamentary trust created by another who died during the decedent's lifetime; the trustee of a trust created by the decedent's will is not included under subdivision (b).

Section 12570 limits the power of the sister state personal representative to collection of personal property. See also Section 12507 ("sister state personal representative" defined).

Background on Section 13051 of Repealed Code

Section 13051 was added by 1986 Cal. Stat. ch. 783 § 24 and was amended by 1988 Cal. Stat. ch. 1199 § 95.5. Subdivision (a) was drawn from subdivision (d) of former Probate Code Section 650 (repealed by 1986 Cal. Stat. ch. 783 § 9) and was consistent with the portion of subdivision (b) of former Probate Code Section 630 (repealed by 1986 Cal. Stat. ch. 783 § 9) which referred to the guardian or conservator of the estate. Subdivision (b) was new and superseded the portion of subdivision (b) of former Section 630 which referred to a trustee. Subdivision (c) was drawn from subdivision (c) of former Section 630. For background on the provisions of this division, see the Comment to this division under the division heading.

The 1988 amendment added subdivision (d). For background on the 1988 amendment, see *Comments to Conforming Revisions and Repeals*, 19 Cal. L. Revision Comm'n Reports 1031, 1094 (1988).

§ 13052. Date of valuation of property

Comment. Section 13052 continues Section 13052 of the repealed Probate Code without change. This section makes clear that the probate referee is to use the date of the decedent's death as the date of valuation in making an inventory and appraisal for the purposes of this part. Thus, for example, record title to real property may be transferred by affidavit under Chapter 5 (commencing with Section 13200) even if the real property since the date of death has appreciated to a value in excess of $10,000. For provisions concerning inventory and appraisal, see Sections 13103 (affidavit procedure for collection or transfer of personal property), 13152(b) (petition for court order determining succession to real property), 13200(c) (affidavit procedure for real property of small value).

Background on Section 13052 of Repealed Code

Section 13052 was a new provision added by 1986 Cal. Stat. ch. 783 § 24 and was amended by 1988 Cal. Stat. ch. 1199 § 96. The 1988 amendment corrected terminology. See new Probate Code Sections 400-453 (probate referees). For background on the provisions of this division, see the Comment to this division under the division heading. For background on the 1988 amendment, see *Comments to Conforming Revisions and Repeals*, 19 Cal. L. Revision Comm'n Reports 1031, 1094 (1988).

§ 13053. Application of this part

Comment. Section 13053 continues Section 13053 of the repealed Probate Code without substantive change. This section makes clear that this part applies if the payment, delivery, or transfer is made on or after July 1, 1987, without regard to whether the decedent died before or after that date. Thus, where the decedent died before July 1, 1987, the provisions of this part may be used to require the payment, delivery, or transfer if the property was not paid, delivered, or transferred prior to July 1, 1987, pursuant to the provisions of former Probate Code Sections 630-632 (repealed by 1986 Cal. Stat. ch. 783 § 9). Section 13053 preserves prior law where a payment, delivery, or transfer was made under prior law before July 1, 1987. As to the application of any amendments made after that date, see Section 3.

Background on Section 13053 of Repealed Code

Section 13053 was a new provision added by 1986 Cal. Stat. ch. 783 § 24. For background on the provisions of this division, see the Comment to this division under the division heading.

§ 13054. Reference to provision of former law deemed reference to comparable provisions of Chapter 3

Comment. Section 13054 continues Section 13054 of the repealed Probate Code without substantive change. This section makes clear that a reference in a statute or written instrument to a provision of former law is deemed to be a reference to the comparable provision of Chapter 3 (commencing with Section 13100).

Background on Section 13054 of Repealed Code

Section 13054 was a new provision added by 1986 Cal. Stat. ch. 783 § 24. The clause in Section 13054 of the repealed Probate Code making the section apply on and after July 1, 1987, was omitted as obsolete. For background on the provisions of this division, see the Comment to this division under the division heading.

CHAPTER 3. AFFIDAVIT PROCEDURE FOR COLLECTION OR TRANSFER OF PERSONAL PROPERTY

Comment. The procedure provided by this chapter can be used only if all of the following conditions are satisfied:

(1) The gross value of the decedent's real and personal property in this state (excluding certain property) does not exceed $60,000. See Section 13100. See also Section 13050 (exclusions).

(2) No proceeding for the administration of the decedent's estate is pending or has been conducted in California. See Section 13108.

(3) Not less than 40 days have elapsed since the death of the decedent. See Section 13100. (Other provisions permit a surviving spouse to collect salary owing to the deceased spouse without waiting for a 40-day period to elapse. See Sections 13600-13606.)

(4) The person who seeks to collect the money, receive the property, or have the evidences transferred is the successor of the decedent. See Section 13101. The affidavit or declaration required by Section 13101 must be executed by all the successors who have an interest in the property sought to be collected, received, or transferred. See Sections 13004 (defining "particular item of property"), 13006 (defining "successor of the decedent").

The procedure under this chapter cannot be used for real property. See Section 13115. However, the phrase "whether or not secured by a lien on real property" in subdivision (c) of Section 13100 makes clear that evidence of a debt or obligation may be transferred under this chapter even though the debt or obligation is secured by a lien on real property. Where a particular item of property transferred under this chapter is an obligation secured by a lien on real property, Section 13106.5 requires that the affidavit or declaration be recorded in the office of the county

recorder of the county where the real property is located. For a procedure for obtaining without probate a court order determining the persons who succeed to real property of a decedent (limited to a case where the gross value of decedent's real and personal property in this state does not exceed $60,000), see Sections 13150-13157. For an affidavit procedure for obtaining marketable title to real property of a decedent without probate (limited to a case where the gross value of decedent's real property in this state does not exceed $10,000), see Sections 13200-13208. For a procedure permitting a surviving spouse to obtain a court order that real property passed to the surviving spouse (without limit as to the value of the real property), see Sections 13650-13660. See also Sections 13540-13542 (right of surviving spouse to dispose of real property).

§ 13100. Collection or transfer of personal property without probate

Comment. Section 13100 continues Section 13100 of the repealed Probate Code without change. The requirement that not less than 40 days have elapsed since the death of the decedent is consistent with Section 13540 (surviving spouse has power to deal with and dispose of real property after 40 days from the death of other spouse). For similar requirements, see Health & Safety Code § 18102 (requirement that 40 days have elapsed from death of owner to permit transfer of registration of manufactured home, mobilehome, commercial coach, truck camper, or floating home using affidavit procedure); Veh. Code § 9916 (requirement that 40 days have elapsed from death of owner to permit transfer of ownership of vessel using affidavit procedure). But see Sections 330 (delivery of decedent's tangible personal property), 13600-13606 (surviving spouse may collect salary owing to the deceased spouse without waiting for a 40-day period to elapse).

The procedure under this chapter cannot be used for real property. See Section 13115. However, the phrase "whether or not secured by a lien on real property" in subdivision (c) of Section 13100 makes clear that evidence of a debt or obligation may be transferred under this chapter even though the debt or obligation is secured by a lien on real property. Where a particular item of property transferred under this chapter is an obligation secured by a lien on real property, Section 13106.5 requires that the affidavit or declaration be recorded in the office of the county recorder of the county where the real property is located if the instrument creating the lien on the real property has been recorded in that county. See also the Comment to this chapter under the chapter heading.

Background on Section 13100 of Repealed Code

Section 13100 was added by 1986 Cal. Stat. ch. 783 § 24. The section continued without substantive change a portion of former Probate Code Section 630 (repealed by

1986 Cal. Stat. ch. 783 § 9) with the addition of the requirement that 40 days have elapsed since the death of the decedent and the omission of the provision that precluded use of the affidavit procedure where the gross value of the decedent's real property in this state exceeded $10,000. For background on the provisions of this division, see the Comment to this division under the division heading.

§ 13101. Furnishing affidavit or declaration

Comment. Section 13101 continues Section 13101 of the repealed Probate Code without change. See also the Comment to this chapter under the chapter heading.

The affidavit or declaration must be executed by all successors of the decedent who have an interest in the property sought to be collected, received, or transferred. See Sections 13004 (defining "particular item of property"), 13006 (defining "successor of the decedent").

Background on Section 13101 of Repealed Code

Section 13101 was added by 1986 Cal. Stat. ch. 783 § 24 and was amended by 1987 Cal. Stat. ch. 923 § 94 and by 1988 Cal. Stat. ch. 113 § 15.6. The section superseded portions of subdivision (b) of former Probate Code Section 630 (repealed by 1986 Cal. Stat. ch. 783 § 9). The portions of Section 13101 prescribing the contents of the affidavit or declaration were new provisions and replaced the provision of former Section 630 that required that the person or persons furnish an affidavit or declaration "showing the right of the person or persons to receive such money or property, or to have such evidences transferred." For background on the provisions of this division, see the Comment to this division under the division heading.

The 1987 amendment to Section 13101 was nonsubstantive; it added clarifying language to the introductory portion of subdivision (a). The 1988 amendment added subdivision (c) and relettered former subdivision (c) to be subdivision (d). Subdivision (c) was included to alert the person preparing or using the affidavit or declaration to the additional requirements of Section 13106.5. See also the Comment to Section 13105. For background on the 1988 amendment, see *Communication from the California Law Revision Commission Concerning Assembly Bill 2779*, 19 Cal. L. Revision Comm'n Reports 1191, 1194-95 (1988).

§ 13102. Presenting decedent's evidence of ownership

Comment. Section 13102 continues Section 13102 of the repealed Probate Code without change. See also the Comment to this chapter under the chapter heading. Subdivision (a) is comparable to Health and Safety Code Section 18102 and Vehicle Code Sections 5910 and 9916 (transfer upon affidavit of manufactured home, mobilehome, commercial coach, truck camper, floating home, vehicle, or vessel upon furnishing affidavit and appropriate certificate of ownership or title and registration card, if available). See also Fin. Code § 6950 (payment of deposit account of nonresident decedent upon presentation of evidence of ownership of account, if any). Subdivision (b) protects the holder against the possible claim of another where there is outstanding evidence of ownership. The provision was drawn in part from Financial Code

Section 6652 (issuance of new evidence of account by savings and loan association).

Background on Section 13102 of Repealed Code

Section 13102 was a new provision added by 1986 Cal. Stat. ch. 783 § 24. For background on the provisions of this division, see the Comment to this division under the division heading. See also the Comment to this chapter under the chapter heading.

§ 13103. Inventory and appraisal of real property

Comment. Section 13103 continues Section 13103 of the repealed Probate Code without substantive change. See also the Comment to this chapter under the chapter heading. This section requires an appraisal of real property by a probate referee. Even though the procedure provided in this chapter may be used to collect or transfer personal property only, the appraisal is required if the estate includes any real property in this state (excluding real property held in joint tenancy or other real property described in paragraph (1) of subdivision (a) of Section 13050). Even though an appraisal of the real property in this state is required, the inventory and appraisal need not include an inventory and appraisal of the personal property in the decedent's estate or any real property that is not located in this state. If the decedent's estate does not include any real property in this state, no inventory and appraisal is required. For provisions relating to real property, see Chapter 4 (commencing with Section 13150) (court order determining succession to real property), Chapter 5 (commencing with Section 13200) (affidavit procedure for transfer of real property of small value).

Background on Section 13103 of Repealed Code

Section 13103 was a new provision added by 1986 Cal. Stat. ch. 783 § 24 and was amended by 1988 Cal. Stat. ch. 1199 § 96.5. Under former law, the affidavit or declaration alone was sufficient; no inventory and appraisal was required. For background on the provisions of this division, see the Comment to this division under the division heading.

The 1988 amendment corrected terminology and section references. The phrase "in this state" was added in the first clause of Section 13103 to conform to Section 13100. For background on the 1988 amendment, see *Comments to Conforming Revisions and Repeals*, 19 Cal. L. Revision Comm'n Reports 1031, 1094 (1988).

§ 13104. Proof of identity

Comment. Section 13104 continues Section 13104 of the repealed Probate Code without change. This section is designed to provide clear rules as to the type of identification that reasonably may be relied upon to establish the identity of a person executing an affidavit or declaration. This section is drawn from Civil Code Section 1185 (acknowledgment of instrument by notary public); but, unlike Civil Code Section 1185, Section 13104 does not permit a driver's license issued by a Canadian or Mexican public agency to be used as reasonable proof of identity.

Under subdivision (f), the holder must make a notation as required by subdivision (f) for each person executing the affidavit or declaration, but such a notation is not required for the person or persons for whom the affidavit or declaration contains a notary public's certificate of acknowledgment of identity. See also the Comment to this chapter under the chapter heading.

Background on Section 13104 of Repealed Code

Section 13104 was a new provision added by 1986 Cal. Stat. ch. 783 § 24. For background on the provisions of this division, see the Comment to this division under the division heading.

§ 13105. Transfer of property to successor

Comment. Section 13105 continues Section 13105 of the repealed Probate Code without substantive change. See also the Comment to this chapter under the chapter heading.

Where the item of property transferred is an obligation secured by a lien on real property, Section 13106.5 requires that, in addition to the requirements of Section 13101, the affidavit or declaration include the recording reference to the instrument creating the lien and a notary public's certificate of acknowledgment identifying each person executing the affidavit or declaration.

Where the particular item of property transferred under this chapter is an obligation secured by a lien on real property, Section 13106.5 requires that the affidavit or declaration be recorded in the office of the county recorder of the county where the real property is located if the instrument creating the lien on the real property has been recorded in that county. Any duty of the obligor under Section 13105 to pay the successor of the decedent or otherwise to satisfy the obligation does not arise until the obligor has been furnished with satisfactory evidence that the affidavit or declaration has been recorded and satisfies the requirements of Section 13101 and subdivision (a) of Section 13106.5. Such evidence might be, for example, a certified copy of the recorded affidavit or declaration, but any other satisfactory evidence of the recorded affidavit or declaration would be sufficient. The reference to Civil Code Section 2935 in subdivision (b) of Section 13106.5 makes clear that the recording of the affidavit or declaration is not itself notice to the obligor so as to invalidate a payment made to the holder of the note secured by the lien on the real property.

Subdivision (b) makes clear that the duty imposed by subdivision (a) can be enforced by an action against the holder. This remedy is in addition to the remedies against the holder if the decedent's estate is probated. The holder does not act unreasonably in refusing to pay,

deliver, or transfer the property if the refusal is based on the holder's good faith belief that there may be estate taxes payable.

The person paying, delivering, or transferring the property is protected from liability. See Section 13106. See also Section 13102(b) (providing bond to protect person paying, delivering, or transferring property). Payment or transfer pursuant to Section 13105 does not preclude later administration of the decedent's estate. See Section 13108. As to the liabilities of the person receiving the property, see Sections 13109-13113.

Background on Section 13105 of Repealed Code

Section 13105 was added by 1986 Cal. Stat. ch. 783 § 24. Subdivision (a) was drawn from portions of former Probate Code Section 630 (repealed by 1986 Cal. Stat. ch. 783 § 9). Subdivision (b) was new. For background on the provisions of this division, see the Comment to this division under the division heading.

§ 13106. Protection of transferor from liability

Comment. Section 13106 continues Section 13106 of the repealed Probate Code without change. Subdivision (b) was drawn from Section 6855 of the Financial Code. See also Section 13102(b) (bond to protect person paying, delivering, or transferring property). See also the Comment to this chapter under the chapter heading.

Background on Section 13106 of Repealed Code

Section 13106 was added by 1986 Cal. Stat. ch. 783 § 24. Subdivision (a) continued the first sentence of former Probate Code Section 631 (repealed by 1986 Cal. Stat. ch. 783 § 9) without substantive change but with the addition of clarifying language. Subdivision (b) was new. For background on the provisions of this division, see the Comment to this division under the division heading.

§ 13106.5. Recording of affidavit or declaration where property is obligation secured by lien on real property

Comment. Section 13106.5 continues Section 13106.5 of the repealed Probate Code without change, except that the section is revised to extend to any person who enters into a transaction in good faith and for a valuable consideration, not only purchasers, lessees, and lenders. This section covers the situation where the particular item of property transferred under this chapter is a debt (including a promissory note) secured by a lien on real property. See also the Comment to this chapter under the chapter heading.

Where the instrument (including a mortgage or deed of trust) creating the lien has been recorded, subdivision (a) requires that the affidavit or declaration be recorded in the office of the county recorder of the county where the real property is located instead of merely being furnished to the holder of the property as required by the introductory clause of subdivision (a) of Section 13101. Recording of the affidavit or

declaration in the real property records is mandatory so that the title records will reflect the transfer of the debt and security interest under this chapter to the person or persons executing the affidavit or declaration as successor of the decedent and to establish of record their authority to execute a satisfaction or release of the mortgage where the debt is secured by a mortgage.

The affidavit or declaration must be in the form prescribed by Section 13101 and must also satisfy the requirements of paragraphs (1) and (2) of subdivision (a) of Section 13106.5. The affidavit or declaration must be executed under penalty of perjury under the laws of the State of California. See Section 13101(a)(11). A certified copy of the decedent's death certificate must be attached to the affidavit or declaration. Section 13101(d).

Subdivision (a)(1) requires that the recording reference of the instrument creating the lien be included in the affidavit or declaration. This information makes it easier to locate the recorded lien instrument. Additionally, the recording reference insures that the affidavit or declaration relates to an obligation secured by a lien on real property.

Subdivision (a)(2) requires that the affidavit or declaration include a notary public's certificate of acknowledgment identifying each person executing the affidavit or declaration. This is required because the affidavit or declaration is to be recorded in the real property records. The requirement also avoids the need to furnish the obligor on the debt with additional proof of the identity of each person executing the affidavit or declaration. See Section 13104(e).

Under subdivision (b), the transfer of the debt under this chapter is given the same effect as the assignment of the debt. It is a well established principle of law that the assignment of a debt carries with it the security for the payment of the debt. Thus, the assignment of a debt secured by a mortgage carries the mortgage with it (Civil Code § 2936); and, when a power to sell is given to a mortgagee or other encumbrancer in an instrument intended to secure the payment of money, the power is deemed a part of the security and vests in the person who by assignment becomes entitled to payment of the money, and the power of sale may be executed by that person if the assignment is acknowledged and recorded (Civil Code § 2932.5).

The person or persons executing the affidavit or declaration as successor of the decedent have the same rights and duties they would have if they were an assignee of the mortgage or an assignee of the beneficial interest under the deed of trust. See Civil Code § 2941. Giving these persons these rights permits, for example, a title insurer to

rely upon the affidavit or declaration in case of the recording of a notice of default in a non-judicial foreclosure of the deed of trust or the mortgage (with a power of sale). The duties include, for example, the duty to execute a certificate of discharge of the mortgage if the lien is secured by a mortgage.

Under subdivision (b), the recording of the affidavit or declaration operates as constructive notice of its contents to all persons. See Civil Code § 2934. Any duty of the obligor under Section 13105 to pay the successor of the decedent or otherwise to satisfy the obligation does not arise until the obligor has been furnished with satisfactory evidence that the affidavit or declaration has been recorded and satisfies the requirements of subdivision (a). Such evidence might be, for example, a certified copy of the recorded affidavit or declaration, but any other satisfactory evidence of the recorded affidavit or declaration would be sufficient. The reference to Civil Code Section 2935 in subdivision (b) makes clear that the recording of the affidavit or declaration is not itself notice to the obligor so as to invalidate a payment made to the holder of the note secured by the lien on the real property.

Subdivision (c) makes clear that the trustee under the deed of trust can execute a reconveyance in reliance upon the statements made in the affidavit or declaration and protects a good faith purchaser, lessee, or lender who relies upon the recorded reconveyance. Subdivision (d) makes clear that a good faith purchaser, lessee, or lender may rely in good faith upon a recorded discharge of the mortgage executed by the person or persons executing the affidavit or declaration as successor of the decedent (or by the successor in interest of such a person). These protections are consistent with the protection given the holder of the decedent's property under Section 13106. They are necessary to protect the obligor on the debt who has paid the debt to the person or persons executing the affidavit or declaration and needs to have the property title records reflect the fact that the debt has been paid and the security released.

Except as specifically provided in Section 13106.5, the provisions of this chapter—including but not limited to Sections 13109-13113 (liability of persons to whom payment, delivery, or transfer of property is made under this chapter)—apply to money collected pursuant to Section 13106.5.

Section 13106.5 covers not only the right to payment of a debt secured by a lien on real property, but also the right to enforce an obligation the performance of which is secured by a lien on real property.

Background on Section 13106.5 of Repealed Code

Section 13106.5 was a new provision added by 1988 Cal. Stat. ch. 113 § 15.7. For background on this section, see *Communication from the California Law Revision Commission Concerning Assembly Bill 2779*, 19 Cal. L. Revision Comm'n Reports 1191, 1195-97 (1988).

§ 13107. Claim against estate in probate

Comment. Section 13107 continues Section 13107 of the repealed Probate Code without substantive change. See also the Comment to this chapter under the chapter heading.

Background on Section 13107 of Repealed Code

Section 13107 was added by 1986 Cal. Stat. ch. 783 § 24. The section continued former Probate Code Section 631.1 (repealed by 1986 Cal. Stat. ch. 783 § 9) without substantive change. For background on the provisions of this division, see the Comment to this division under the division heading.

§ 13108. No pending probate proceeding; later probate proceeding not precluded

Comment. Section 13108 continues Section 13108 of the repealed Probate Code without change. See also the Comment to this chapter under the chapter heading.

Background on Section 13108 of Repealed Code

Section 13108 was added by 1986 Cal. Stat. ch. 783 § 24. Subdivision (a) was a new provision that was consistent with the last sentence of former Probate Code Section 631 (repealed by 1986 Cal. Stat. ch. 783 § 9). Subdivision (b) was drawn from the last sentence of former Probate Code Section 631. See generally Brezzo v. Brangero, 51 Cal. App. 79, 81, 196 P. 87 (1921); Evans, *Comments on the Probate Code of California*, 19 Calif. L. Rev. 602, 607 (1931). For background on the provisions of this division, see the Comment to this division under the division heading.

§ 13109. Liability for decedent's unsecured debts

Comment. Section 13109 continues Section 13109 of the repealed Probate Code without change. This section (by providing that any action based on the debt is subject to the same defenses that would have been available to the decedent if the decedent had not died) adopts the same statute of limitations that would have applied in an action against the decedent on the debt if the decedent had not died. The liability under this section is limited. See Section 13112. See also the Comment to this chapter under the chapter heading.

Background on Section 13109 of Repealed Code

Section 13109 was added by 1986 Cal. Stat. ch. 783 § 24 and was amended by 1988 Cal. Stat. ch. 113 § 16. Section 13109 was a new provision drawn from former Probate Code Section 645.3 (repealed by 1986 Cal. Stat. ch. 783 § 9, continued as Section 6611) (small estate set-aside), but Section 13109 did not include the one-year limitation on the duration of personal liability provided by Section 6611. Instead, Section 13109 followed Section 13554 (enforcement of liability of deceased spouse

against surviving spouse) and Section 13156 (enforcement of debt against petitioners who receive low value real property under court order made in summary proceeding). For background on the provisions of this division, see the Comment to this division under the division heading.

The 1988 amendment revised Section 13109 to make clear that a person who takes personal property by affidavit is not liable to a creditor whose claim is barred. See, e.g., Sections 9002(b) (bar of claims not filed in accordance with statute), 9257 (bar of rejected claims). For background on this amendment, see *Communication from the California Law Revision Commission Concerning Assembly Bill 2779*, 19 Cal. L. Revision Comm'n Reports 1191, 1198 (1988).

§ 13110. Liability to person having superior right

Comment. Section 13110 continues Section 13110 of the repealed Probate Code without change. This section makes clear that a person having a superior right to the property by testate or intestate succession can bring an action against the person who received the property. This remedy is an alternative to petitioning for the probate of the decedent's estate. See Section 13111. The liability under Section 13110 is limited. See Section 13112. See also the Comment to this chapter under the chapter heading.

Background on Section 13110 of Repealed Code

Section 13110 was a new provision added by 1986 Cal. Stat. ch. 783 § 24. For background on the provisions of this division, see the Comment to this division under the division heading.

§ 13111. Restitution if estate proceeding commenced

Comment. Section 13111 continues Section 13111 of the repealed Probate Code without substantive change and adds the provision to paragraph (1) of subdivision (a) that, if the person encumbered the property after it was delivered or transferred, the person is liable for the amount necessary to satisfy the balance of the encumbrance as of the date the property is restored to the estate. This amount is in addition to the property and the net income the person received from the property. Section 13111 is comparable to Section 13206. See also the Comment to this chapter under the chapter heading.

Background on Section 13111 of Repealed Code

Section 13111 was a new provision added by 1986 Cal. Stat. ch. 783 § 24 and was amended by 1988 Cal. Stat. ch. 1199 § 97. For background on the provisions of this division, see the Comment to this division under the division heading.

The 1988 amendment revised subdivision (a) and added subdivision (f) to clarify the application of this section in the case of a nondomiciliary decedent. See Sections 12501 ("ancillary administration" defined), 12505 ("nondomiciliary decedent" defined). For background on the 1988 amendment, see *Comments to Conforming Revisions and Repeals*, 19 Cal. L. Revision Comm'n Reports 1031, 1095 (1988).

§ 13112. Limitation on liability under Sections 13109 and 13110

Comment. Section 13112 continues Section 13112 of the repealed Probate Code without change. This section limits the liability of a person to whom payment, delivery, or transfer of the decedent's property is made under this chapter. Proceedings in this state include ancillary administration. See the Section 13111(f) and the Comment thereto. See also the Comment to this chapter under the chapter heading.

Background on Section 13112 of Repealed Code

Section 13112 was a new provision added by 1986 Cal. Stat. ch. 783 § 24 and was amended by 1988 Cal. Stat. ch. 1199 § 97.5. For background on the provisions of this division, see the Comment to this division under the division heading. The 1988 amendment revised subdivision (a) to conform to the revision of Section 13111. See Section 13111(a). For background on the 1988 amendment, see *Comments to Conforming Revisions and Repeals*, 19 Cal. L. Revision Comm'n Reports 1031, 1095 (1988).

§ 13113. Other remedies not affected

Comment. Section 13113 continues Section 13113 of the repealed Probate Code without change. This section makes clear that the remedies provided in this chapter for decedent's estate, creditors, and persons having a superior right to the property do not limit any other remedies that are available by reason of fraud or intentional wrongdoing. See also the Comment to this chapter under the chapter heading.

Background on Section 13113 of Repealed Code

Section 13113 was a new provision added by 1986 Cal. Stat. ch. 783 § 24. For background on the provisions of this division, see the Comment to this division under the division heading.

§ 13114. Payment of costs and fees of public administrator and costs of coroner

Comment. Section 13114 continues Section 13114 of the repealed Probate Code without change. See also the Comment to this chapter under the chapter heading.

Background on Section 13114 of Repealed Code

Section 13114 was added by 1986 Cal. Stat. ch. 783 § 24 and was amended by 1987 Cal. Stat. ch. 923 § 94.1 and by 1988 Cal. Stat. ch. 1199 § 98. Subdivision (a) continued subdivision (e) of former Probate Code Section 630 (repealed by 1986 Cal. Stat. ch. 783 § 9) without substantive change. Subdivision (b) was a new provision added by the 1987 amendment. For background on the provisions of this division, see the Comment to this division under the division heading.

The 1988 amendment corrected terminology and section references. For background on the 1988 amendment, see *Comments to Conforming Revisions and Repeals*, 19 Cal. L. Revision Comm'n Reports 1031, 1095 (1988).

§ 13115. Chapter does not apply to real property

Comment. Section 13115 continues Section 13115 of the repealed Probate Code without change. See also Section 13106.5 (recording of affidavit or declaration where property is obligation secured by lien on real property). For provisions relating to real property, see Chapter 4 (commencing with Section 13150) (court order determining succession to real property), Chapter 5 (commencing with Section 13200) (affidavit procedure for real property of small value). See also the Comment to this chapter under the chapter heading.

Background on Section 13115 of Repealed Code

Section 13115 was added by 1986 Cal. Stat. ch. 783 § 24. The section continued the last sentence of subdivision (b) of former Probate Code Section 630 (repealed by 1986 Cal. Stat. ch. 783 § 9) with language changes for clarification only and without substantive change. For background on the provisions of this division, see the Comment to this division under the division heading.

§ 13116. Chapter supplemental to other procedures

Comment. Section 13116 continues Section 13116 of the repealed Probate Code without change. This section makes clear that this chapter is supplemental and in addition to other procedures. Property may be delivered to a person under these other procedures without compliance with the requirements of this chapter. See, e.g., Sections 330 (delivery of decedent's tangible personal property), 13600-13606 (right of surviving spouse to collect salary owing to deceased spouse without waiting for a 40-day period to elapse). See also Fin. Code § 6950 (payment of deposit account of nonresident decedent); Gov't. Code § 27491.3 (property of deceased at scene of death; sealing of premises of deceased); Health & Safety Code § 18102 & Veh. Code §§ 5910, 9916 (transfer upon affidavit of manufactured home, mobilehome, commercial coach, truck camper, floating home, vehicle, or vessel). Section 13106, which protects the transferor from liability, does not apply where the property is released pursuant to other procedures. Other procedures may, however, protect the transferor from liability. See, e.g., Fin. Code § 6951 (protection of certain financial institutions); Veh. Code § 5910 (protection of Department of Motor Vehicles and its officers and employees). See also the Comment to this chapter under the chapter heading.

Background on Section 13116 of Repealed Code

Section 13116 was a new provision added by 1987 Cal. Stat. ch. 923 § 94.3. See *Communication from California Law Revision Commission Concerning Assembly Bill 706*, 19 Cal. L. Revision Comm'n Reports 545, 611 (1988). For background on the provisions of this division, see the Comment to this division under the division heading.

CHAPTER 4. COURT ORDER DETERMINING SUCCESSION TO REAL PROPERTY

Comment. This chapter provides a procedure for obtaining, without the need for a probate proceeding, a court order determining that real property of the decedent passed to one or more persons by intestate succession or under the decedent's will. This procedure is comparable to that provided by Sections 13650-13660 (order determining that property passed to surviving spouse).

The procedure provided by this chapter can be used only if all of the following conditions are satisfied:

(1) The gross value of the decedent's real and personal property in this state (excluding certain property) does not exceed $60,000. See Sections 13151, 13152. See also Section 13050 (excluded property).

(2) No proceeding is pending or has been conducted in this state for administration of the decedent's estate. See Section 13150.

(3) The decedent died leaving real property in this state and 40 days have elapsed since the death of the decedent. See Section 13151.

(4) The petition is joined in by all those who have succeeded to the real property by intestate succession or under the decedent's will. See Section 13151. See also Sections 13004 (defining "particular item of property"), 13006 (defining "successor of the decedent").

(5) The petition is accompanied by an inventory and appraisal by a probate referee. See Section 13152(b).

(6) Notice is given to each of the persons named in the petition. See Section 13153. See also Section 13152(a)(7) (persons required to be named in petition).

§ 13150. No pending or completed probate proceeding

Comment. Section 13150 continues Section 13150 of the repealed Probate Code without change. This section makes the procedure provided by this chapter an alternative to the probate of a small estate. See also the Comment to this chapter under the chapter heading.

Background on Section 13150 of Repealed Code

Section 13150 was a new provision added by 1986 Cal. Stat. ch. 783 § 24. For background on the provisions of this division, see the Comment to this division under the division heading.

§ 13151. Petition for court order determining succession to real property

Comment. Section 13151 continues Section 13151 of the repealed Probate Code without change. See also the Comment to this chapter under the chapter heading.

Background on Section 13151 of Repealed Code

Section 13151 was a new provision added by 1986 Cal. Stat. ch. 783 § 24. For background on the provisions of this division, see the Comment to this division under the division heading.

§ 13152. Contents of petition; inventory and appraisal

Comment. Section 13152 continues Section 13152 of the repealed Probate Code without substantive change. This section is comparable to Section 13651 (petition for order determining property is property passing to surviving spouse). See also the Comment to this chapter under the chapter heading. For general provisions relating to petitions, see Sections 1020-1023.

A guardian, conservator, trustee, custodian, or attorney-in-fact is authorized to act as petitioner on behalf of the person to whom the real property passes. See Section 13051.

The petitioner (rather than the court) selects the probate referee because the inventory and appraisal must be attached to the petition when filed. (Ordinarily, the court will not designate a probate referee until after a petition is filed.) The provision of subdivision (b) that makes this clear is the same as the last sentence of Section 13103 (affidavit procedure for collection or transfer of personal property) and the last sentence of subdivision (c) of Section 13200 (affidavit procedure for real property of less than $10,000 in value).

Background on Section 13152 of Repealed Code

Section 13152 was a new provision added by 1986 Cal. Stat. ch. 783 § 24 and was amended by 1987 Cal. Stat. ch. 923 § 94.5, 1988 Cal. Stat. ch. 113 § 16.5, 1988 Cal. Stat. ch. 1199 § 98.5, and 1988 Cal. Stat. ch. 1447 § 5. For background on the provisions of this division, see the Comment to this division under the division heading.

The 1987 amendment revised Section 13152 to recognize that the petitioner (rather than the court) selects the probate referee. For background on this amendment, see *Communication from California Law Revision Commission Concerning Assembly Bill 708*, 19 Cal. L. Revision Comm'n Reports 545, 612 (1988).

The amendment made by 1988 Cal. Stat. ch. 113 § 16.5 revised subdivision (a)(7) to make a technical correction by substituting "petitioner" for "personal representative" as applicable to a trustee. This was a nonsubstantive revision. For background on this amendment, see *Communication from the California Law Revision Commission Concerning Assembly Bill 2779*, 19 Cal. L. Revision Comm'n Reports 1191, 1198 (1988).

The amendment made by 1988 Cal. Stat. ch. 1199 § 98.5 corrected terminology and section references. For background on this 1988 amendment, see *Comments to Conforming Revisions and Repeals*, 19 Cal. L. Revision Comm'n Reports 1031, 1095 (1988).

The amendment made by 1988 Cal. Stat. ch. 1447 § 5 made technical nonsubstantive revisions.

§ 13153. Notice of hearing

Comment. Section 13153 continues Section 13153 of the repealed Probate Code without change. For general provisions relating to notice of hearing, see Sections 1200-1221. See also Sections 1250-1252 (request for special notice), 1260-1265 (proof of giving of notice). See also the Comment to this chapter under the chapter heading.

Background on Section 13153 of Repealed Code

Section 13153 was a new provision added by 1986 Cal. Stat. ch. 783 § 24 and was amended by 1987 Cal. Stat. ch. 923 § 95. For background on the provisions of this division, see the Comment to this division under the division heading.

The 1987 amendment deleted the provision requiring the clerk to set the matter for hearing, this provision being generalized in Section 1285. The former requirement that notice be given not less than 10 days before the hearing was replaced by a cross-reference to Section 1220 which provides for 15 days' notice. The former language relating to the manner of mailing notice was deleted and generalized in Sections 1215 (manner of mailing) and 1220 (manner of mailing notice of hearing).

§ 13154. Court order

Comment. Section 13154 continues Section 13154 of the repealed Probate Code without change. See also the Comment to this chapter under the chapter heading. This section states the determinations required for a court order determining that real property described in the order is property of the decedent passing to the petitioners. The court does not make a determination under Section 13154 as to the value of specific items or parcels of property; the court makes a determination only that "the gross value of the decedent's real and personal property in California, excluding the property described in Section 13050, does not exceed sixty thousand dollars ($60,000)."

For general provisions, see Sections 1000-1004 (rules of practice), 1040-1050 (hearings and orders), 7260-7263 (orders affecting property).

Background on Section 13154 of Repealed Code

Section 13154 was a new provision added by 1986 Cal. Stat. ch. 783 § 24. For background on the provisions of this division, see the Comment to this division under the division heading. The section was amended by 1988 Cal. Stat. ch. 1199 § 99 to correct terminology. For background on the 1988 amendment, see *Comments to Conforming Revisions and Repeals*, 19 Cal. L. Revision Comm'n Reports 1031, 1095 (1988).

§ 13155. Effect of order

Comment. Section 13155 continues Section 13155 of the repealed Probate Code without change. This section is comparable to Section 13657 (property passing to surviving spouse). See also the Comment to this chapter under the chapter heading.

Background on Section 13155 of Repealed Code

Section 13155 was a new provision added by 1986 Cal. Stat. ch. 783 § 24. For background on the provisions of this division, see the Comment to this division under the division heading.

§ 13156. Liability for decedent's unsecured debts

Comment. Section 13156 continues Section 13156 of the repealed Probate Code without change. See also the Comment to this chapter under the chapter heading. This section is comparable to Section 6611 (small estate set-aside), but Section 13156 does not include the one-year limitation on the duration of personal liability provided by Section 6611. See the discussion in the Comment to Section 13109.

Subdivision (d) makes clear that a person who takes real property by court order under this chapter is not liable to a creditor whose claim is barred. See, e.g., Section 9002(b) (bar of claims not filed in accordance with statute).

Background on Section 13156 of Repealed Code

Section 13156 was a new provision added by 1986 Cal. Stat. ch. 783 § 24 and was amended by 1988 Cal. Stat. ch. 113 § 17. For background on the provisions of this division, see the Comment to this division under the division heading.

The 1988 amendment added subdivision (d). For background on the 1988 amendment, see *Communication from the California Law Revision Commission Concerning Assembly Bill 2779*, 19 Cal. L. Revision Comm'n Reports 1191, 1198 (1988).

§ 13157. Attorney's fee

Comment. Section 13157 continues Section 13157 of the repealed Probate Code without substantive change. This section is comparable to Sections 6613 (small estate set-aside), 13660 (determination or confirmation of property passing or belonging to surviving spouse). See the Comment to Section 13660. See also the Comment to this chapter under the chapter heading.

Background on Section 13157 of Repealed Code

Section 13157 was a new provision added by 1986 Cal. Stat. ch. 783 § 24. For background on the provisions of this division, see the Comment to this division under the division heading.

CHAPTER 5. AFFIDAVIT PROCEDURE FOR REAL PROPERTY OF SMALL VALUE

Comment. This chapter provides a procedure for obtaining marketable title to real property in which the decedent's interest is shown by a probate referee's appraisal not to exceed $10,000 gross value. The procedure was drawn in part from a statute enacted in Arizona in 1983. See Ariz. Rev. Stat. Ann. §§ 14-3971, 14-3972 (1988).

The procedure provided by this chapter can be used only if all of the following conditions are satisfied:

(1) The gross value of the decedent's real property in this state (excluding certain property) does not exceed $10,000. See Section 13200(a)(5). See also Section 13050 (exclusions).

(2) No proceeding for the administration of the decedent's estate is pending or has been conducted in California. See Section 13200(a)(7).

(3) Not less than six months have elapsed since the death of the decedent. See Section 13200(a) (introductory clause).

(4) The funeral expenses, expenses of last illness, and all unsecured debts of the decedent have been paid. See Section 13200(a)(8).

(5) The person executing the affidavit is the successor of the decedent. See Section 13200(a)(9). See also Section 13006 ("successor of the decedent" defined).

(6) The affidavit contains a notary public's certificate of acknowledgment identifying each person executing the affidavit. See Section 13200(b).

(7) An inventory and appraisal of the real property, made by a probate referee, is attached to the affidavit. See Section 13200(c).

(8) A copy of the decedent's will is attached to the affidavit if the successor of the decedent claims the property under the will of the decedent. See Section 13200(d).

(9) A certified copy of the decedent's death certificate is attached to the affidavit. See Section 13200(e).

Where the real property has a gross value in excess of $10,000 or where less than six months have elapsed since the death of the decedent, the affidavit procedure under this chapter may not be used; but there is another procedure available for obtaining a marketable title to the real property without the need for probate. See Sections 13150-13157 (where gross value of decedent's real and personal property in this state does not exceed $60,000, successor of decedent may obtain court order determining succession to the real property).

§ 13200. Filing affidavit in superior court; inventory and appraisement

Comment. Section 13200 continues Section 13200 of the repealed Probate Code without substantive change. The former reference to personal service has been omitted from subdivision (f) in view of Section 1216 (service by personal delivery satisfies a statutory requirement of service by mail). See also the Comment to this chapter under the chapter heading.

Background on Section 13200 of Repealed Code

Section 13200 was a new provision added by 1986 Cal. Stat. ch. 783 § 24. For background on the provisions of this division, see the Comment to this division under the division heading. The section was amended by 1988 Cal. Stat. ch. 1199 § 99.5 to correct terminology and section references.

§ 13201. Filing fee

Comment. Section 13201 continues Section 13201 of the repealed Probate Code without change. The fee provided by Section 13201 is the total filing fee. No additions to the $35 fee may be made for such fees as a law library fee, judges' retirement fee, reporter's fee, or the like. See also the Comment to this chapter under the chapter heading.

Background on Section 13201 of Repealed Code

Section 13201 was a new provision added by 1986 Cal. Stat. ch. 783 § 24. For background on the provisions of this division, see the Comment to this division under the division heading.

§ 13202. Filing; certified copy; recording

Comment. Section 13202 continues Section 13202 of the repealed Probate Code without change. See also the Comment to this chapter under the chapter heading.

Background on Section 13202 of Repealed Code

Section 13202 was a new provision added by 1986 Cal. Stat. ch. 783 § 24. For background on the provisions of this division, see the Comment to this division under the division heading.

§ 13203. Effect of recorded affidavit

Comment. Section 13203 continues Section 13203 of the repealed Probate Code without change, except that the section is revised to extend to any person who enters into a transaction in good faith and for a valuable consideration, not only purchasers, lessees, and lenders. See also the Comment to this chapter under the chapter heading.

Subdivision (a) is designed to give the successors designated in the certified copy of the affidavit marketable title to the real property. Good faith purchasers, lessees, and lenders are protected to the same extent as they are protected when they deal with the distributee under an order for distribution that had become final. See Section 11605 (order for distribution binds and is conclusive as to the rights of all interested persons). Although Section 13203 protects good faith purchasers, lessees, and lenders, it does not preclude later probate proceedings. See subdivision (b). A subsequent probate proceeding will have no effect on good faith purchasers, lessees, and lenders. But the successor designated in the recorded affidavit has a duty to restore the property and its net income, or its value and interest on its proceeds if the property has been disposed of, to the estate if proceedings are later commenced for

administration of the decedent's estate. See Section 13206. The successor also is liable to an unsecured creditor (Section 13204) or to a person having a superior right to the property (Section 13205). Liability under Sections 13204 and 13205 is limited. See Section 13207. If the person fraudulently executed or filed the affidavit, the person is liable to the decedent's estate or to a person having a superior right to the property for three times the fair market value of the property. See Sections 13205(b), 13206(b).

Background on Section 13203 of Repealed Code

Section 13203 was a new provision added by 1986 Cal. Stat. ch. 783 § 24. For background on the provisions of this division, see the Comment to this division under the division heading. The section was amended by 1988 Cal. Stat. ch. 1199 § 100 to correct terminology.

§ 13204. Liability for decedent's unsecured debts

Comment. Section 13204 continues Section 13204 of the repealed Probate Code without change. See also the Comment to this chapter under the chapter heading. This section is comparable to Section 13109. See the Comment to Section 13109. The liability under Section 13204 is limited. See Section 13207. As to barred claims, see, e.g., Section 9002(b) (bar of claims not filed in accordance with statute).

Background on Section 13204 of Repealed Code

Section 13204 was a new provision added by 1986 Cal. Stat. ch. 783 § 24 and was amended by 1988 Cal. Stat. ch. 113 § 18. For background on the provisions of this division, see the Comment to this division under the division heading. The 1988 amendment added the last sentence to Section 13204 to make clear that a person who takes real property by affidavit is not liable to a creditor whose claim is barred. For background on the 1988 amendment, see *Communication from the California Law Revision Commission Concerning Assembly Bill 2779*, 19 Cal. L. Revision Comm'n Reports 1191, 1198 (1988).

§ 13205. Liability to person having superior right

Comment. Section 13205 continues Section 13205 of the repealed Probate Code without change, except for the revision of subdivision (c) to conform it to Sections 13110(c) and 13206(f). The liability under Section 13205 is limited. See Section 13207. See also the Comment to this chapter under the chapter heading.

Background on Section 13205 of Repealed Code

Section 13205 was a new provision added by 1986 Cal. Stat. ch. 783 § 24. For background on the provisions of this division, see the Comment to this division under the division heading.

§ 13206. Restitution if estate proceeding commenced

Comment. Section 13206 continues Section 13206 of the repealed Probate Code without change, excpet for the addition of the provision in paragraph (1) of subdivision (a) that, if the person encumbered the

property after the certified copy of the affidavit was issued, the person is liable for the amount necessary to satisfy the balance of the encumbrance as of the date the property is restored to the estate. This amount is in addition to the property and the net income the person received from the property. Section 13206 is comparable to Section 13111. See the Comment to Section 13111. See also the Comment to this chapter under the chapter heading.

Background on Section 13206 of Repealed Code

Section 13206 was a new provision added by 1986 Cal. Stat. ch. 783 § 24. For background on the provisions of this division, see the Comment to this division under the division heading.

§ 13207. Limitation on liability under Sections 13204 and 13205

Comment. Section 13207 continues Section 13207 of the repealed Probate Code without change. This section is comparable to Section 13112. See also the Comment to this chapter under the chapter heading.

Background on Section 13207 of Repealed Code

Section 13207 was a new provision added by 1986 Cal. Stat. ch. 783 § 24. For background on the provisions of this division, see the Comment to this division under the division heading.

§ 13208. Other remedies not affected

Comment. Section 13208 continues Section 13208 of the repealed Probate Code without change. This section makes clear that the remedies provided in this chapter for the decedent's estate, creditors, and persons having a superior right to the property by testate or intestate succession do not limit any other remedies that are available by reason of fraud or intentional wrongdoing. See also the Comment to this chapter under the chapter heading.

Background on Section 13208 of Repealed Code

Section 13208 was a new provision added by 1986 Cal. Stat. ch. 783 § 24. For background on the provisions of this division, see the Comment to this division under the division heading.

PART 2. PASSAGE OF PROPERTY TO SURVIVING SPOUSE WITHOUT ADMINISTRATION

CHAPTER 1. GENERAL PROVISIONS

§ 13500. Necessity of administration

Comment. Section 13500 continues Section 13500 of the repealed Probate Code without change. As to a surviving spouse's waiver of rights, see Sections 140-147.

Background on Section 13500 of Repealed Code

Section 13500 was added by 1986 Cal. Stat. ch. 783 § 24. The section restated subdivision (a) of former Probate Code Section 649.1 (repealed by 1986 Cal. Stat. ch.

783 § 9) without substantive change. For background on the provisions of this division, see the Comment to this division under the division heading.

§ 13501. Property subject to administration

Comment. Section 13501 continues Section 13501 of the repealed Probate Code without substantive change. Administration of property described in Section 13501 may be avoided under Part 1 (commencing with Section 13000) (collection or transfer of small estate without administration) if the requirements of that part are satisfied. See also Chapter 6 (commencing with Section 6600) of Part 3 of Division 6 (small estate set-aside). As to a surviving spouse's waiver of rights, see Sections 140-147.

Background on Section 13501 of Repealed Code

Section 13501 was added by 1986 Cal. Stat. ch. 783 § 24. The section restated former Probate Code Section 649.3 (repealed by 1986 Cal. Stat. ch. 783 § 9) without substantive change. The section was amended by 1987 Cal. Stat. ch. 923 § 96 to revise a cross reference. The section was again amended by 1988 Cal. Stat. ch. 1199 § 100.5 to correct section references. For background on the provisions of this division, see the Comment to this division under the division heading.

§ 13502. Election of administration

Comment. Section 13502 continues Section 13502 of the repealed Probate Code without substantive change. The surviving spouse may elect to probate only a portion of the surviving spouse's one-half of the community or quasi-community property. This permits, for example, probate of all of a block of stock that is community property without the need to probate the surviving spouse's one-half share of the other community property. As to a surviving spouse's waiver of rights, see Sections 140-147.

Background on Section 13502 of Repealed Code

Section 13502 was added by 1986 Cal. Stat. ch. 783 § 24 and was amended by 1988 Cal. Stat. ch. 1199 § 101. The section continued subdivisions (b) and (c) of former Probate Code Section 649.1 (repealed by 1986 Cal. Stat. ch. 783 § 9) with the addition of language in the introductory portion of subdivision (a) that makes clear that "all or a portion" of the described property of the deceased spouse or the surviving spouse may be administered. This language made clear that the surviving spouse may elect to have administered only a portion of the surviving spouse's one-half of the community or quasi-community property. This was consistent with the practice under prior law. The language also recognized the practice in some cases under former law of probating less than all of the property of the deceased spouse in the estate of the deceased spouse. The 1988 amendment corrected terminology and section references. For background on the provisions of this division, see the Comment to this division under the division heading.

§ 13503. Election to transfer property to trustee

Comment. Section 13503 continues Section 13503 of the repealed Probate Code without change.

Background on Section 13503 of Repealed Code

Section 13503 was added by 1986 Cal. Stat. ch. 783 § 24 and was amended by 1988 Cal. Stat. ch. 1199 § 101.5. The section continued subdivision (d) of former Probate Code Section 649.1 (repealed by 1986 Cal. Stat. ch. 783 § 9) without substantive change. The 1988 amendment corrected terminology. For background on the provisions of this division, see the Comment to this division under the division heading.

§ 13504. Property held in a revocable trust

Comment. Section 13504 continues Section 13504 of the repealed Probate Code without change.

Background on Section 13504 of Repealed Code

Section 13504 was added by 1986 Cal. Stat. ch. 783 § 24 and amended by 1987 Cal. Stat. ch. 128 § 7. Section 13504 continued former Probate Code Section 649.5 (repealed by 1986 Cal. Stat. ch. 783 § 9) without substantive change. The 1987 amendment corrected a cross-reference. For background on the provisions of this division, see the Comment to this division under the division heading.

§ 13505. Application of this part

Comment. Section 13505 continues Section 13505 of the repealed Probate Code without change.

Background on Section 13505 of Repealed Code

Section 13505 was added by 1986 Cal. Stat. ch. 783 § 24. By making this part applicable whether the deceased spouse died before, on, or after the date this part became operative (July 1, 1987), the section eliminated the restrictive effect of former Section 658 (repealed by 1986 Cal. Stat. ch. 783 § 9) which preserved the law in effect prior to January 1, 1985, for cases where the deceased spouse died before that date. For background on the provisions of this division, see the Comment to this division under the division heading.

§ 13506. Reference in statute or written instrument to repealed statutory provision

Comment. Section 13506 restates Section 13506 of the repealed Probate Code without substantive change. This section has been revised to delete the introductory clause which referred to the operative date of the section (July 1, 1987), this clause having become obsolete. Section 13506 makes clear that a reference in a statute or written instrument to a provision of former law is deemed to be a reference to the comparable provision of this part.

Background on Section 13506 of Repealed Code

Section 13506 was added by 1986 Cal. Stat. ch. 783 § 24. The section superseded former Probate Code Section 649.6 (repealed by 1986 Cal. Stat. ch. 783 § 9). For background on the provisions of this division, see the Comment to this division under the division heading.

CHAPTER 2. RIGHT OF SURVIVING SPOUSE TO DISPOSE OF REAL PROPERTY

§ 13540. Right of surviving spouse to dispose of real property

Comment. Section 13540 continues Section 13540 of the repealed Probate Code without change. Subdivision (b) makes clear that this section does not affect or limit the liability of a surviving spouse under Sections 13550-13553. Although Section 13540 may preclude a devisee or creditor from enforcing his or her rights against a grantee, purchaser, encumbrancer, or lessee or against the property interest transferred to the grantee, purchaser, encumbrancer, or lessee, the section does not relieve the surviving spouse of any liability under Sections 13550-13553. If the surviving spouse is liable under those sections and the devisee or creditor obtains a judgment against the surviving spouse, the judgment may be enforced against any property of the surviving spouse (including the proceeds of the disposition described in Section 13540) that is subject to the enforcement of a judgment.

Background on Section 13540 of Repealed Code

Section 13540 was added by 1986 Cal. Stat. ch. 783 § 24. The section continued the first portion of the first sentence and all of the last sentence of former Probate Code Section 649.2 (repealed by 1986 Cal. Stat. ch. 783 § 9). Subdivision (b) was a new provision. For background on the provisions of this division, see the Comment to this division under the division heading.

§ 13541. Recording notice of interest in property

Comment. Section 13541 continues Section 13541 of the repealed Probate Code without substantive change.

Background on Section 13541 of Repealed Code

Section 13541 was added by 1986 Cal. Stat. ch. 783 § 24. The section restated a portion of former Probate Code Section 649.2 (repealed by 1986 Cal. Stat. ch. 783 § 9) without substantive change except that Section 13541 contained additional language to make clear that the notice must be recorded within 40 days from the death of the spouse. This clarification was consistent with language in Wilson v. Superior Court, 101 Cal. App. 2d 592, 595, 225 P.2d 1002 (1951). For background on the provisions of this division, see the Comment to this division under the division heading.

§ 13542. Dispositions under former law not affected

Comment. Section 13542 continues Section 13542 of the repealed Probate Code without substantive change. This section makes clear that dispositions made under repealed Probate Code Section 649.2 (repealed by 1986 Cal. Stat. ch. 783 § 9) are not affected.

Background on Section 13542 of Repealed Code

Section 13542 was a new provision added by 1986 Cal. Stat. ch. 783 § 24. For background on the provisions of this division, see the Comment to this division under the division heading.

CHAPTER 3. LIABILITY FOR DEBTS OF DECEASED SPOUSE

§ 13550. Personal liability of surviving spouse

Comment. Section 13550 continues Section 13550 of the repealed Probate Code without change.

Background on Section 13550 of Repealed Code

Section 13550 was added by 1986 Cal. Stat. ch. 783 § 24 and was amended by 1988 Cal. Stat. ch. 1199 § 102. The section continued subdivision (a) of former Probate Code Section 649.4 (repealed by 1986 Cal. Stat. ch. 783 § 9) without substantive change. The 1988 amendment corrected a section reference. For background on the provisions of this division, see the Comment to this division under the division heading.

§ 13551. Limitation on liability

Comment. Section 13551 continues Section 13551 of the repealed Probate Code without change.

Background on Section 13551 of Repealed Code

Section 13551 was added by 1986 Cal. Stat. ch. 783 § 24. The section continued the substance of subdivision (b) of former Probate Code Section 649.4 (repealed by 1986 Cal. Stat. ch. 783 § 9) without substantive change but with the addition of language to make clear that (1) "value" means fair market value and (2) the value of property belonging to the surviving spouse that is administered in the estate of the deceased spouse is excluded in determining the extent of the liability of the surviving spouse. See Section 13502(a) (election to administer only a portion of the community and quasi-community property that belongs to the surviving spouse). For background on the provisions of this division, see the Comment to this division under the division heading.

§ 13552. Effect of commencement of proceedings for administration of estate of deceased spouse

Comment. Section 13552 continues Section 13552 of the repealed Probate Code without change.

Background on Section 13552 of Repealed Code

Section 13552 was added by 1986 Cal. Stat. ch. 783 § 24 and amended by 1987 Cal. Stat. ch. 923 § 97. Section 13552 continued subdivision (d) of former Probate Code Section 649.4 (repealed by 1986 Cal. Stat. ch. 783 § 9) without substantive change but added the clarifying phrase "who have or who secure" in subdivision (b). The 1987 amendment made technical, nonsubstantive revisions in the section. For background on the provisions of this division, see the Comment to this division under the division heading.

§ 13553. No liability if all property administered

Comment. Section 13553 continues Section 13553 of the repealed Probate Code without substantive change.

Background on Section 13553 of Repealed Code

Section 13553 was added by 1986 Cal. Stat. ch. 783 § 24 and was amended by 1988 Cal. Stat. ch. 1199 § 102.5. The section continued subdivision (c) of former Probate

Code Section 649.4 (repealed by 1986 Cal. Stat. ch. 783 § 9) without substantive change. The 1988 amendment corrected a section reference. For background on the provisions of this division, see the Comment to this division under the division heading.

§ 13554. Enforcement of liability

Comment. Section 13554 continues Section 13554 of the repealed Probate Code without change.

Background on Section 13554 of Repealed Code

Section 13554 was added by 1986 Cal. Stat. ch. 783 § 24. The section continued subdivision (e) of former Probate Code Section 649.4 (repealed by 1986 Cal. Stat. ch. 783 § 9) without substantive change. For background on the provisions of this division, see the Comment to this division under the division heading.

CHAPTER 4. COLLECTION BY AFFIDAVIT OF COMPENSATION OWED TO DECEASED SPOUSE

Comment. This chapter provides a simple procedure that permits a surviving spouse immediately to collect not more than $5,000 of the earnings owed by an employer to the deceased spouse. Use of this procedure will provide funds for the surviving spouse until the probate proceeding is commenced and a family allowance may be obtained.

This chapter was drawn from Sections 13100-13115 (affidavit procedure for collection or transfer of property of small estate where death occurred not less than 40 days before affidavit presented to holder of property). However, use of the procedure under this chapter applies without regard to the amount of the decedent's estate; use of the procedure is not limited to cases where the estate is a small estate. Also, use of the procedure under this chapter is permitted without any delay after the death of the decedent; use of the procedure is not limited to cases where the decedent died not less than 40 days before the affidavit or declaration is presented to the employer.

§ 13600. Collection of salary or other compensation, not exceeding $5,000, by affidavit

Comment. Section 13600 continues Section 13600 of the repealed Probate Code without change. See also the Comment to this chapter under the chapter heading.

This section permits the guardian or conservator of the estate of the surviving spouse to use the procedure under this chapter to collect compensation owing to the deceased spouse. See also Section 13601(d) (proof of appointment of person as guardian or conservator). Letters of the conservator of the estate of the surviving spouse would be reasonable proof of authority to act for the surviving spouse.

If the employer does not personally know the affiant or declarant, reasonable proof of identity must be provided to the employer. See Section 13601(c). The kinds of proof of identity that may be relied on are specified in Section 13104. See Section 13601(c).

Background on Section 13600 of Repealed Code

Section 13600 was a new provision added by 1986 Cal. Stat. ch. 783 § 24. For background on the provisions of this division, see the Comment to this division under the division heading.

§ 13601. Contents of affidavit; proof of identity

Comment. Section 13601 continues Section 13601 of the repealed Probate Code without change. See also the Comment to this chapter under the chapter heading.

Background on Section 13601 of Repealed Code

Section 13601 was a new provision added by 1986 Cal. Stat. ch. 783 § 24. For background on the provisions of this division, see the Comment to this division under the division heading.

§ 13602. Payment by employer

Comment. Section 13602 continues Section 13602 of the repealed Probate Code without change. This section imposes a duty on the employer to pay promptly the decedent's earnings to the person presenting the affidavit or declaration. The employer who pays the decedent's earnings to the person presenting the affidavit or declaration is protected from liability. See Section 13603. Payment pursuant to Section 13602 does not preclude later administration of the decedent's estate. See Section 13605. As to the liability of the person receiving the payment, see Section 13605. See also the Comment to this chapter under the chapter heading.

Background on Section 13602 of Repealed Code

Section 13602 was a new provision added by 1986 Cal. Stat. ch. 783 § 24. For background on the provisions of this division, see the Comment to this division under the division heading.

§ 13603. Protection of employer from liability

Comment. Section 13603 continues Section 13603 of the repealed Probate Code without change. This section protects the employer who pays to the affiant or declarant compensation owing to the deceased spouse. To obtain this protection, the affidavit or declaration must satisfy the requirements of Section 13601 and must be accompanied by reasonable proof of the identity of the person presenting the affidavit as the surviving spouse or person acting for the surviving spouse and, if someone claims to be acting for the surviving spouse, must be accompanied by reasonable proof of the authority of the person to act for

the surviving spouse. See Sections 13600 and 13601 and the Comment to Section 13600. Section 13603 is comparable to Section 13106. See also the Comment to this chapter under the chapter heading.

Background on Section 13603 of Repealed Code

Section 13603 was a new provision added by 1986 Cal. Stat. ch. 783 § 24. The section was drawn from the first sentence of former Probate Code Section 631 (repealed by 1986 Cal. Stat. ch. 783 § 9). For background on the provisions of this division, see the Comment to this division under the division heading.

§ 13604. Enforcement of payment

Comment. Section 13604 continues Section 13604 of the repealed Probate Code without substantive change. This section is comparable to subdivision (b) of Section 13105. Section 13604 makes clear that the duty imposed by Section 13602 may be enforced by an action against the employer. This remedy is in addition to the remedies against the employer if the estate of the deceased spouse is administered. See also Section 13656 (court order determining that property passed to surviving spouse made in proceeding to determine or confirm property passing or belonging to surviving spouse). See also the Comment to this chapter under the chapter heading.

Background on Section 13604 of Repealed Code

Section 13604 was a new provision added by 1986 Cal. Stat. ch. 783 § 24. For background on the provisions of this division, see the Comment to this division under the division heading.

§ 13605. Rights of heirs or devisees of deceased spouse not affected

Comment. Section 13605 continues Section 13605 of the repealed Probate Code without change. This section makes clear that the surviving spouse takes under this chapter subject to the rights of any person having a superior right and has the duty to restore the payment received to the decedent's estate if the estate is administered. See also the Comment to this chapter under the chapter heading.

Background on Section 13605 of Repealed Code

Section 13605 was a new provision added by 1986 Cal. Stat. ch. 783 § 24. For background on the provisions of this division, see the Comment to this division under the division heading.

§ 13606. Other methods of collecting compensation not affected

Comment. Section 13606 continues Section 13606 of the repealed Probate Code without change. This section makes clear that the procedure provided by this chapter is in addition to, and not in lieu of, any other method of collecting unpaid compensation owed to a decedent. See, e.g., Sections 5000 (payment of money due to decedent to person designated by decedent), 6600-6615 (small estate set-aside), 13100-13116 (affidavit procedure for collection or transfer of personal property

of a small estate), 13650-13660 (court order determining that property passed to surviving spouse). See also Gov't Code §§ 12479 (designation by state employee of person to receive warrants upon employee's death), 53245 (designation by public employee of person to receive warrants upon employee's death). See also the Comment to this chapter under the chapter heading.

Background on Section 13606 of Repealed Code

Section 13606 was a new provision added by 1986 Cal. Stat. ch. 783 § 24. For background on the provisions of this division, see the Comment to this division under the division heading.

CHAPTER 5. DETERMINATION OR CONFIRMATION OF PROPERTY PASSING OR BELONGING TO SURVIVING SPOUSE

§ 13650. Filing of petition

Comment. Section 13650 continues Section 13650 of the repealed Probate Code without substantive change. As to a surviving spouse's waiver of rights at death, see Sections 140-147.

Background on Section 13650 of Repealed Code

Section 13650 was added by 1986 Cal. Stat. ch. 783 § 24 and was amended by 1988 Cal. Stat. ch. 1199 § 103. Subdivision (a) continued the first sentence of subdivision (a) of former Probate Code Section 650 (repealed by 1986 Cal. Stat. ch. 783 § 9) without substantive change, but subdivision (a) of Section 13650 used language drawn from subdivision (c) of former Probate Code Section 655 (repealed by 1986 Cal. Stat. ch. 783 § 9) in place of the language of the first sentence of subdivision (a) of former Section 650 which referred to the allegation in the petition. Subdivision (b) continued subdivision (c) of former Section 650 (repealed by 1986 Cal. Stat. ch. 783 § 9) without substantive change. Subdivision (c) continued subdivision (d) of former Section 650 (repealed by 1986 Cal. Stat. ch. 783 § 9) without substantive change. The 1988 amendment corrected section references. For background on the provisions of this division, see the Comment to this division under the division heading.

§ 13651. Contents of petition

Comment. Section 13651 continues Section 13651 of the repealed Probate Code without substantive change and adds the requirement that the petition state not only the name, age, and address of each heir or devisee of the deceased spouse but also the relation to the deceased spouse of each such heir or devisee. The requirement that the petition be verified has been omitted as unnecessary in view of Section 1021 which imposes a general requirement that petitions be verified. For general provisions, see Sections 1020-1023 (petitions and other papers).

Background on Section 13651 of Repealed Code

Section 13651 was added by 1986 Cal. Stat. ch. 783 § 24. The section continued a portion of subdivision (a) and all of subdivision (b) of former Probate Code Section 650 (repealed by 1986 Cal. Stat. ch. 783 § 9) without substantive change except that

paragraph (2) of subdivision (a) of Section 13651 was revised to make clear that it was limited to an unincorporated business. For background on the provisions of this division, see the Comment to this division under the division heading.

§ 13652. Filing petition in pending proceeding

Comment. Section 13652 continues Section 13652 of the repealed Probate Code without change.

Background on Section 13652 of Repealed Code

Section 13652 was added by 1986 Cal. Stat. ch. 783 § 24. The section continued the first sentence of former Probate Code Section 651 (repealed by 1986 Cal. Stat. ch. 783 § 9) without substantive change. For background on the provisions of this division, see the Comment to this division under the division heading.

§ 13653. Filing petition with petition for probate proceeding

Comment. Section 13653 continues Section 13653 of the repealed Probate Code without substantive change. The word "verified" has been omitted as unnecessary in view of Section 1021 which imposes a general requirement that petitions be verified.

If proceedings for the administration of the estate of the deceased spouse are not pending, the petition may be filed with a petition for the probate of the will of the deceased spouse or for administration of the estate of the deceased spouse or the petition may be filed (without filing a petition for probate or administration) in the superior court of the county in which the estate of the deceased spouse may be administered. See Section 13650.

Background on Section 13653 of Repealed Code

Section 13653 was added by 1986 Cal. Stat. ch. 783 § 24. The section restated the second sentence of former Probate Code Section 651 (repealed by 1986 Cal. Stat. ch. 783 § 9) without substantive change. For background on the provisions of this division, see the Comment to this division under the division heading.

§ 13654. Effect of petition

Comment. Section 13654 continues Section 13654 of the repealed Probate Code without change.

Background on Section 13654 of Repealed Code

Section 13654 was added by 1986 Cal. Stat. ch. 783 § 24. The section restated former Probate Code Section 652 (repealed by 1986 Cal. Stat. ch. 783 § 9) without substantive change. For background on the provisions of this division, see the Comment to this division under the division heading.

§ 13655. Notice of hearing

Comment. Section 13655 continues Section 13655 of the repealed Probate Code without substantive change. The notice provisions in subdivision (b) have been revised to adopt the general notice provision of Section 1220. The requirement that the clerk set the petition for hearing has been omitted as unnecessary in view of Section 1041 which imposes

this as a general requirement. For general provisions, see Sections 1200-1221 (notice of hearing), 1250-1252 (request for special notice), 1260-1265 (proof of giving of notice).

Background on Section 13655 of Repealed Code

Section 13655 was added by 1986 Cal. Stat. ch. 783 § 24 and was amended by 1987 Cal. Stat. ch. 923 § 98, 1988 Cal. Stat. ch. 113 § 18.5, and 1988 Cal. Stat. ch. 1199 § 103.5. For background on the provisions of this division, see the Comment to this division under the division heading.

Subdivision (a) restated the substance of former Probate Code Section 654 (repealed by 1986 Cal. Stat. ch. 783 § 9) with two omissions:

(1) The last sentence of former Section 654, which required that a copy of the petition also be served, was not continued.

(2) The requirement of former Section 654 that notice of the hearing be given at least 20 days prior to the date of the hearing was superseded by the requirement that notice of hearing be given in the manner prescribed by the statute provisions referred to in subdivision (a) of Section 13655.

Subdivision (b) restated the substance of former Probate Code Section 653 (repealed by 1986 Cal. Stat. ch. 783 § 9) with the following changes:

(1) The requirement of former Section 653 that a copy of the petition be served was not continued.

(2) The requirement of former Section 653 that notice of hearing be given at least 20 days prior to the hearing was replaced by a requirement that notice of hearing be given at least 15 days before the hearing.

(3) The requirement of former Section 653 that notice of hearing be given to "[a]ll other persons who are named in the will of the deceased spouse, if the petitioner bases the allegation that all or part of the estate of the deceased spouse is property passing to the surviving spouse upon the will" was not continued. This requirement was replaced by the addition of language in paragraph (2) of subdivision (b) that required notice, if the personal representative is the trustee of a trust that is a devisee under the decedent's will, to all persons interested in the trust as determined in the case of future interests pursuant to the general statutory provision governing notice in future interests cases. Paragraphs (1) to (4), inclusive, of subdivision (b) of Section 13655 required notice to all persons who might be adversely affected by the order. The former requirement that notice be given to all persons named in the will, however, apparently required notice to persons named in the will who were neither devisees nor named as executors of the will. Elimination of the requirement that notice be given to all persons named in the will avoided the need to give notice of hearing to persons who have no interest in the proceeding. For example, notice no longer needed to be given to a mortuary designated in the will to handle funeral arrangements, or to a former spouse where the will recites dissolution of a prior marriage.

The 1987 amendment (1) revised the second sentence of subdivision (b) of Section 13655 to conform to the general 15-day notice period provided in Section 1220, (2) revised the cross-reference in subdivision (b)(3) to the procedure for requesting special notice (see Sections 1250-1252), and (3) deleted the last paragraph of the section since had become obsolete. For background on the 1987 amendment, see *Communication from California Law Revision Commission Concerning Assembly Bill 708*, 19 Cal. L. Revision Comm'n Reports 545, 612-13 (1988). See also *Recommendation Relating to Notice in Probate Proceedings*, 19 Cal. L. Revision Comm'n Reports 357 (1988).

The amendment made by 1988 Cal. Stat. ch. 113 § 18.5 was a technical correction in subdivision (b)(2) by substituting "petitioner" for "personal representative" as

applicable to a trustee. This was a nonsubstantive revision. For background on the 1988 amendment, see *Communication from the California Law Revision Commission Concerning Assembly Bill 2779*, 19 Cal. L. Revision Comm'n Reports 1191, 1198 (1988).

The amendment made by 1988 Cal. Stat. ch. 1199 § 103.5 corrected section references.

§ 13656. Court order

Comment. Section 13656 continues Section 13656 of the repealed Probate Code without substantive change. The order under subdivision (b) determines that property which is not property passing to the surviving spouse is subject to administration. But administration of this property may be avoided under Part 1 (commencing with Section 13000) (collection or transfer of small estate without administration) of this division if the requirements of that part are satisfied. See also Sections 6600-6614 (small estate set-aside). For general provisions relating to hearings and orders, see Sections 1040-1050. An order under Section 13656 is appealable. See Section 7240.

Background on Section 13656 of Repealed Code

Section 13656 was added by 1986 Cal. Stat. ch. 783 § 24 and was amended by 1988 Cal. Stat. ch. 1199 § 104. The section continued subdivisions (a) and (b) of former Probate Code Section 655 (repealed by 1986 Cal. Stat. ch. 783 § 9) without substantive change. The 1988 amendment corrected section references. For background on the provisions of this division, see the Comment to this division under the division heading.

§ 13657. Effect of court order

Comment. Section 13657 continues Section 13657 of the repealed Probate Code without change. This section is comparable to Section 13155 (court order determining succession to real property in small estate).

Background on Section 13657 of Repealed Code

Section 13657 was added by 1986 Cal. Stat. ch. 783 § 24. The section continued subdivision (c) of former Probate Code Section 655 (repealed by 1986 Cal. Stat. ch. 783 § 9) without substantive change. For background on the provisions of this division, see the Comment to this division under the division heading.

§ 13658. Protection of interests of creditors of business of deceased spouse

Comment. Section 13658 continues Section 13658 of the repealed Probate Code without substantive change.

Background on Section 13658 of Repealed Code

Section 13658 was added by 1986 Cal. Stat. ch. 783 § 24 and was amended by 1988 Cal. Stat. ch. 1199 § 104.5. The section continued former Probate Code Section 656 (repealed by 1986 Cal. Stat. ch. 783 § 9) without substantive change except that (1) Section 13658 was limited to creditors of an "unincorporated" business and (2) language, drawn from former Probate Code Section 657 (repealed by 1986 Cal. Stat.

ch. 783 § 9), was added to give the court specific authority to require the filing of an inventory and appraisal where necessary to protect the creditors of the business. The 1988 amendment corrected terminology and section references. For background on the provisions of this division, see the Comment to this division under the division heading.

§ 13659. Inventory and appraisal

Comment. Section 13659 continues Section 13659 of the repealed Probate Code without substantive change. An inventory and appraisal is not required to obtain an order under this chapter. However, Section 13659 gives the petitioner the option to file an inventory and appraisal in a proceeding under this chapter if the petitioner so desires. This option permits the petitioner to obtain an independent appraisal made by a probate referee if such an appraisal is desired by the petitioner. The petitioner may consider the independent appraisal useful for the purposes of capital gains taxes or other taxes. See also Section 13658 (authority of court to require the filing of an inventory and appraisal to protect creditors of unincorporated business of deceased spouse).

Background on Section 13659 of Repealed Code

Section 13659 was added by 1986 Cal. Stat. ch. 783 § 24 and was amended by 1988 Cal. Stat. ch. 1199 § 105. The first sentence of Section 13659 was drawn from former subdivision (a)(2)(A) of former Probate Code Section 605 (prior to its amendment by 1986 Cal. Stat. ch. 783 § 8). The remainder of Section 13659 was drawn from the first three sentences of former Section 657 (repealed by 1986 Cal. Stat. ch. 783 § 9). The 1988 amendment corrected terminology and section references. For background on the provisions of this division, see the Comment to this division under the division heading.

§ 13660. Attorney's fees

Comment. Section 13660 continues Section 13660 of the repealed Probate Code without change. In the case of a petition and order under this chapter, this section leaves the entire matter of the legal fees to private agreement between the attorney and the client. The last two sentences of Section 13660 make clear that the probate court has jurisdiction (1) to determine the reasonableness of the attorney's fees if there is a dispute and no agreement or (2) to determine the meaning of the agreement if there is a dispute concerning the meaning of an agreement concerning the attorney's fees for filing the petition and obtaining the order. The probate court has no jurisdiction with respect to attorney's fees for other legal work in connection with the decedent's property.

Background on Section 13660 of Repealed Code

Section 13660 was added by 1986 Cal. Stat. ch. 783 § 24. Section 13660 replaced the provision of prior law that provided for court approval of the attorney's fee for services performed in connection with the filing of a petition and obtaining a court order under former Probate Code Sections 650-658 (provisions repealed by 1986 Cal.

Stat. ch. 783 § 9). See former subdivision (b) of former Probate Code Section 910 (prior to its amendment by 1975 Cal. Stat. ch. 173 § 11). No provision was made under former law for court approval of the attorney's fee for other legal work in connection with the estate of the deceased spouse (such as, for example, tax work, joint tenancy termination, or collection of insurance proceeds), and those matters were left to private agreement between the attorney and the client. For background on the provisions of this division, see the Comment to this division under the division heading.

DIVISION 9. TRUST LAW

Comment. This division supersedes Division 9 (commencing with Section 15000) of the repealed Probate Code. The superseded division was enacted upon recommendation of the California Law Revision Commission. See *Recommendation Proposing the Trust Law,* 18 Cal. L. Revision Comm'n Reports 501 (1986). See also *Communication from California Law Revision Commission Concerning Assembly Bill 2652,* 18 Cal. L. Revision Comm'n Reports 1763 (1986). The Commission, in cooperation with California Continuing Education of the Bar, published the Trust Law as enacted with official comments. See *Selected 1986 Trust and Probate Legislation,* 18 Cal. L. Revision Comm'n Reports 1201, 1207-499 (1986).

After this division was enacted, revisions were made upon recommendation of the Law Revision Commission. See *Recommendation Relating to Technical Revisions in the Trust Law,* 18 Cal. L. Revision Comm'n Reports 1823 (1986); *Communication from the California Law Revision Commission Concerning Assembly Bill 362,* 19 Cal. L. Revision Comm'n Reports 541 (1988); *Comments to Conforming Revisions and Repeals,* 19 Cal. L. Revision Comm'n Reports 1031, 1097-98 (1988); *Recommendation Relating to Trustees' Fees,* 20 Cal. L. Revision Comm'n Reports 185 (1990).

PART 1. GENERAL PROVISIONS

§ 15000. Short title

Comment. Section 15000 continues Section 15000 of the repealed Probate Code without change. This section provides a convenient means of referring to this division. While most important statutory provisions concerning trusts are included in this division, it should be noted that definitions and other general provisions applicable to this division are located elsewhere. See, e.g., Sections 24 ("beneficiary" defined), 56 ("person" defined), 62 ("property" defined), 82 ("trust" defined), 83 ("trust company" defined), 84 ("trustee" defined), 88 ("will" defined); see also Fin. Code §§ 1500-1591 (trust companies), 6515 (savings and loan associations as trustees); Gov't Code §§ 12580-12598 (Uniform Supervision of Trustees for Charitable Purposes Act).

Background on Section 15000 of Repealed Code

Section 15000 was a new provision added by 1986 Cal. Stat. ch. 820 § 40. For background on the provisions of this division, see the Comment to this division under the division heading.

§ 15001. General rule concerning application of division

Comment. Section 15001 restates Section 15001 of the repealed Probate Code without substantive change. The language used in this

section has been revised to reflect the fact that this division of the repealed Probate Code (the Trust Law) became operative on July 1, 1987.

Subdivision (a) provides the general rule that this division applies to all trusts, regardless of when created. Subdivision (a) is comparable to Section 8 of the Uniform Trustees' Powers Act (1964). As to the construction of provisions drawn from uniform acts, see Section 2. Subdivision (b), a specific application of the general rule stated in subdivision (a), makes clear that, except as otherwise provided by statute, this division applies to all proceedings commenced on or after July 1, 1987. Subdivision (c) is a special provision concerning the application of this division to proceedings concerning trusts commenced before July 1, 1987.

For special transitional provisions, see Sections 15401(d) (application of rules governing method of revocation by settlor), 16042 (interpretation of trust terms concerning legal investments), 16062(b)-(d) (application of duty to account to beneficiaries), 16203 (application of rules governing trustee's powers), 16401(c) (application of rules governing trustee's liability to beneficiary for acts of agent), 16402(c) (application of rules governing trustee's liability to beneficiary for acts of cotrustee), 16403(c) (application of rules governing trustee's liability to beneficiary for acts of predecessor trustee), 16460(c) (application of limitations period in proceedings by beneficiaries against trustees), 18000(b) (application of rule governing personal liability of trustee to third persons on contracts).

Background on Section 15001 of Repealed Code

Section 15001 was added by 1986 Cal. Stat. ch. 820 § 40. For background on the provisions of this division, see the Comment to this division under the division heading.

Subdivision (a) continued without substantive change the second sentence of former Civil Code Section 2225 (repealed by 1986 Cal. Stat. ch. 820 § 7) (application of doctrine of merger), the first sentence of subdivision (e) of former Civil Code Section 2261 (repealed by 1986 Cal. Stat. ch. 820 § 7) (application of rules governing investments), and the first sentence of former Probate Code Section 1138.13 (repealed by 1986 Cal. Stat. ch. 820 § 31) (application of provisions governing court proceedings involving trusts), and superseded the second paragraph of former Probate Code Section 1120.2 (repealed by 1986 Cal. Stat. ch. 820 § 31).

Subdivision (b), which is subdivision (c) of the new Probate Code section, is drawn from Code of Civil Procedure Section 694.020 (application of Enforcement of Judgments Law).

§ 15002. Common law as law of state

Comment. Section 15002 continues Section 15002 of the repealed Probate Code without change. This section is a special application of the rule stated in Civil Code Section 22.2 (common law as rule of decision in California courts) and is drawn from Civil Code Section 1380.1 (common law applicable to powers of appointment). As used in this

section, the "common law" does not refer to the common law as it existed in 1850 when the predecessor of Civil Code Section 22.2 was enacted; rather, the reference is to the contemporary and evolving rules of decision developed by the courts in exercise of their power to adapt the law to new situations and to changing conditions. See, e.g., Fletcher v. Los Angeles Trust & Sav. Bank, 182 Cal. 177, 187 P. 425 (1920). See also Section 15004 (application of division to charitable trusts).

Background on Section 15002 of Repealed Code

Section 15002 was added by 1986 Cal. Stat. ch. 820 § 40. The section superseded former Probate Code Section 1120.6(c) (preservation of power of court to permit modification or termination prior to enactment of statute) (repealed by 1986 Cal. Stat. ch. 820 § 31). For background on the provisions of this division, see the Comment to this division under the division heading.

§ 15003. Effect of division on constructive and resulting trusts, fiduciary relationships, and entities and relationships not included in definition of "trust"

Comment. Section 15003 restates Section 15003 of the repealed Probate Code without substantive change. A reference to Chapter 820 of the Statutes of 1986 has been substituted in subdivision (b) for the phrase "the act that added this division to the Probate Code." This is a nonsubstantive change.

Subdivision (a) makes clear that the provisions in this division, relating as they do to express trusts, have no effect on the law relating to constructive and resulting trusts. See Section 82 ("trust" defined). Thus, Section 15003 supersedes various provisions of former law relating to "involuntary" trusts. See former Civil Code §§ 856 (repealed by 1986 Cal. Stat. ch. 820 § 5), 2215, 2217, 2275 (provisions repealed by 1986 Cal. Stat. ch. 820 § 7). For provisions relating to "involuntary trusts," see Civil Code Sections 2223-2225.

Subdivision (b) makes clear that the repeal in 1986 of the Civil Code provisions relating to trusts, particularly former Civil Code Sections 2215-2244 (provisions repealed by 1986 Cal. Stat. ch. 820 § 7), was not intended to affect the general fiduciary principles applicable to confidential relationships. Over the years, courts cited these provisions in cases involving different types of confidential and fiduciary relationships. See, e.g., Cooley v. Miller & Lux, 168 Cal. 120, 131, 142 P. 83 (1914) (attorney and client); Bone v. Hayes, 154 Cal. 759, 763, 99 P. 172 (1908) (agent and principal); Wickersham v. Crittenden, 93 Cal. 17, 29-30, 28 P. 788 (1892) (corporate officers); Baker v. Baker, 260 Cal. App. 2d 583, 586, 67 Cal. Rptr. 523 (1968) (husband and wife); City of Fort Bragg v. Brandon, 41 Cal. App. 227, 229, 82 P. 454 (1919) (municipalities). On the other hand, courts also decided cases in this area

on the basis of general equitable principles without citing the former Civil Code provisions. See, e.g., Estate of Kromrey, 98 Cal. App. 2d 639, 645-46, 220 P.2d 805 (1950) (attorney and client); Committee of Missions v. Pacific Synod, 157 Cal. 105, 127, 106 P. 395 (1909) (church); Schwab v. Schwab-Wilson Machine Corp., 13 Cal. App. 2d 1, 3, 55 P.2d 1268 (1936) (corporate directors). See also Civil Code §§ 2322 (authority of agent), 5103 (spouses' duty in transactions with each other); Corp. Code § 309 (performance of duties by corporate director).

Subdivision (b) also recognizes that the courts have the inherent power to fashion appropriate remedies under the circumstances and that this power in the area of confidential relationships does not depend upon the particular language of former Civil Code Sections 2215-2244. See Civil Code § 22.2 (common law as law of state); see also Prob. Code § 15002 (common law as law of state). Of course, trusts now governed by the new Trust Law are no longer subject to the repealed statutes. See Sections 3 (application of new law), 82 ("trust" defined).

Subdivision (c) is included to avoid the implication that the provisions of the Trust Law cannot be applied to entities and relationships that are excluded from the definition of "trust" as it is used in this division. The Trust Law, by its terms, governs trusts as defined in Section 82. Under Section 15003, the Trust Law is neutral on the question whether it may be applied to other types of entities and relationships, such as those excluded from the definition of "trust" by subdivision (b) of Section 82. The Trust Law is thus made available when it may appropriately be applied by statute, common law, court order or rule, or contract. See also Section 15002 (common law as law of state).

Background on Section 15003 of Repealed Code

Section 15003 was a new provision that was added by 1986 Cal. Stat. ch. 820 § 40 and amended by 1987 Cal. Stat. ch. 128 § 8. For background on the provisions of this division, see the Comment to this division under the division heading.

§ 15004. Application of division to charitable trusts

Comment. Section 15004 continues Section 15004 of the repealed Probate Code without change. This section recognizes that special rules may apply to charitable trusts. See generally 7 B. Witkin, Summary of California Law Trusts §§ 37-55, at 5398-418 (8th ed. 1974); Restatement (Second) of Trusts §§ 348-403 (1957). Thus, the general rules of this division are subordinate to contrary provisions in this division and in the Uniform Supervision of Trustees for Charitable Purposes Act, Government Code Sections 12580-12598, as to trusts that are subject to the jurisdiction of the Attorney General. See Gov't Code §§ 12582 ("trustee" defined for purposes of uniform act), 12583 (charitable trustees

excluded from coverage of uniform act); see also Sections 15205 (designation of beneficiary rule not applicable to charitable trusts), 16105 (Attorney General as party in proceedings involving certain private foundations), 17203(c) (notice to Attorney General of proceedings involving charitable trust), 17210 (enforcement of beneficiary's rights under charitable trust by Attorney General).

Background on Section 15004 of Repealed Code

Section 15004 was a new provision added by 1986 Cal. Stat. ch. 820 § 40. For background on the provisions of this division, see the Comment to this division under the division heading.

PART 2. CREATION, VALIDITY, MODIFICATION, AND TERMINATION OF TRUSTS

CHAPTER 1. CREATION AND VALIDITY OF TRUSTS

§ 15200. Methods of creating trust

Comment. Section 15200 continues Section 15200 of the repealed Probate Code and expands the reference formerly made to a "testamentary" transfer in subdivision (c). This section is drawn from Section 17 of the Restatement (Second) of Trusts (1957).

A declaration under subdivision (a) must satisfy the requirements of Section 15206 (Statute of Frauds as applied to trust of real property) or 15207 (oral trust of personal property), if applicable. A trust may be created for the benefit of the settlor or of a third person (including the trustee). See Sections 15205 (designation of beneficiary), 15209 (exception to doctrine of merger). Consideration is not required to create a trust. See Section 15208. Subdivision (e) is worded differently from the corresponding provision in the Restatement to avoid the implication that it deals with the question of the time of creation of such a trust.

Background on Section 15200 of Repealed Code

Section 15200 was added by 1986 Cal. Stat. ch. 820 § 40. The section superseded parts of former Civil Code Sections 2221 and 2222 (provisions repealed by 1986 Cal. Stat. ch. 820 § 7). For background on the provisions of this division, see the Comment to this division under the division heading.

§ 15201. Intention to create trust

Comment. Section 15201 continues Section 15201 of the repealed Probate Code without change. This section codifies Section 23 of the Restatement (Second) of Trusts (1957). Special requirements may apply to the manifestation of the settlor's intent. See Sections 15206 (Statute of Frauds as applied to trust of real property), 15207 (oral trust of personal property).

Background on Section 15201 of Repealed Code

Section 15201 was added by 1986 Cal. Stat. ch. 820 § 40. The section restated a requirement of former Civil Code Section 2221(1) (repealed by 1986 Cal. Stat. ch. 820 § 7) without substantive change. For background on the provisions of this division, see the Comment to this division under the division heading.

§ 15202. Trust property

Comment. Section 15202 continues Section 15202 of the repealed Probate Code without change. This section is the same as Section 74 of the Restatement (Second) of Trusts (1957). See also Section 62 ("property" defined). For additional comments concerning the nature of property required to form a trust, see Restatement (Second) of Trusts §§ 75-86 (1957).

Background on Section 15202 of Repealed Code

Section 15202 was added by 1986 Cal. Stat. ch. 820 § 40. The section restated a requirement of former Civil Code Sections 2221 and 2222 (provisions repealed by 1986 Cal. Stat. ch. 820 § 7) without substantive change. For background on the provisions of this division, see the Comment to this division under the division heading.

§ 15203. Trust purpose

Comment. Section 15203 continues Section 15203 of the repealed Probate Code without change. See also Civil Code §§ 1667-1669 (unlawful contracts).

Background on Section 15203 of Repealed Code

Section 15203 was added by 1986 Cal. Stat. ch. 820 § 40. The section restated former Civil Code Section 2220 (repealed by 1986 Cal. Stat. ch. 820 § 7) without substantive change. For background on the provisions of this division, see the Comment to this division under the division heading.

§ 15204. Trust for indefinite or general purposes

Comment. Section 15204 continues Section 15204 of the repealed Probate Code without change. Under this section, a trust for indefinite or general purposes may be created and enforced, even though it is not limited to charitable purposes. This changes the rule applicable under cases such as In re Estate of Sutro, 155 Cal. 727, 730, 102 P. 920 (1909). This section is not intended to affect the law relating to the purposes for which a charitable trust may be created.

Background on Section 15204 of Repealed Code

Section 15204 was a new provision added by 1986 Cal. Stat. ch. 820 § 40. For background on the provisions of this division, see the Comment to this division under the division heading.

§ 15205. Designation of beneficiary

Comment. Section 15205 continues Section 15205 of the repealed Probate Code without change.

As provided in subdivision (a), this section does not govern the beneficiary designations in charitable trusts. This subject is left to case law. See Section 15002 (common law as law of state).

Under subdivision (b)(1), the determination of the class of beneficiaries can satisfy the requirements of this section if the class is ascertainable presently or in the future. Subdivision (b)(2) affords the settlor a greater degree of flexibility in creating a trust. Under subdivision (b)(2), a disposition that would be valid as a power of appointment will not fail just because it is made in trust. Cf. In re Estate of Davis, 13 Cal. App. 2d 64, 69, 56 P.2d 584 (1936) (testamentary disposition in trust to distribute to sons and grandchildren as trustee upheld as power of appointment).

Background on Section 15205 of Repealed Code

Section 15205 was added by 1986 Cal. Stat. ch. 820 § 40. For background on the provisions of this division, see the Comment to this division under the division heading.

Subdivision (a) restated a requirement in former Civil Code Sections 2221 and 2222 (provisions repealed by 1986 Cal. Stat. ch. 820 § 7) as it applied to private (i.e., noncharitable) trusts.

Subdivision (b) continued the requirement of former Civil Code Sections 2221 and 2222 that the beneficiary be indicated with "reasonable certainty," but also permitted trusts to describe a beneficiary or class of beneficiaries in a less strict fashion so long as it can be determined that someone satisfies the criteria in the trust instrument.

§ 15206. Statute of Frauds

Comment. Section 15206 continues Section 15206 of the repealed Probate Code without change. See also Section 15003 (law relating to constructive and resulting trusts remains unaffected).

Background on Section 15206 of Repealed Code

Section 15206 was added by 1986 Cal. Stat. ch. 820 § 40. The section (1) restated former Civil Code Section 852 (repealed by 1986 Cal. Stat. ch. 820 § 5) without substantive change and (2) restated without substantive change the former part of Code of Civil Procedure Section 1971 (prior to its amendment by 1986 Cal. Stat. ch. 820 § 19) that related to trusts. For background on the provisions of this division, see the Comment to this division under the division heading.

§ 15207. Oral trust of personal property

Comment. Section 15207 continues Section 15207 of the repealed Probate Code without change.

Subdivision (a) codifies the rule requiring clear and convincing evidence of the creation of an oral trust in personal property. See, e.g., Lefrooth v. Prentice, 202 Cal. 215, 227, 259 P. 947 (1927); Monell v. College of Physicians & Surgeons, 198 Cal. App. 2d 38, 48, 17 Cal. Rptr. 744 (1961); Kobida v. Hinkelmann, 53 Cal. App. 2d 186, 188-93, 127 P.2d 657 (1942). Under this rule, circumstantial evidence may be

sufficient. See Fahrney v. Wilson, 180 Cal. App. 2d 694, 697, 4 Cal. Rptr. 670 (1960).

Subdivision (b) states a requirement for the validity of oral trusts. Under subdivision (b), a delivery of personal property to another person accompanied by an oral declaration by the transferor that the transferee holds it in trust for a beneficiary creates a valid oral trust. Constructive delivery, such as by earmarking property or recording it in the name of the transferee, is also sufficient to comply with subdivision (b).

Subdivision (c) is designed to facilitate application of trust statutes to properly established oral trusts. Although Section 15400 provides that a trust is revocable unless the trust instrument expressly makes it irrevocable, an oral trust may be shown to be irrevocable pursuant to this section.

Nothing in this section affects the law concerning constructive trusts. See Section 15003 and the Comment thereto. Hence, in appropriate circumstances, an attempted disposition of property that fails to satisfy the requirements for an oral trust under Section 15207 may be remedied through the mechanism of a constructive trust.

Background on Section 15207 of Repealed Code

Section 15207 was a new provision added by 1986 Cal. Stat. ch. 820 § 40. For background on the provisions of this division, see the Comment to this division under the division heading.

§ 15208. Consideration

Comment. Section 15208 continues Section 15208 of the repealed Probate Code without change. This section is drawn from Section 112.003 of the Texas Trust Code. See Tex. Prop. Code Ann. § 112.003 (Vernon 1984). For a provision relating to an enforceable promise to create a trust, see Section 15200(e).

Background on Section 15208 of Repealed Code

Section 15208 was added by 1986 Cal. Stat. ch. 820 § 40. The section superseded the part of former Civil Code Section 2222(1) (repealed by 1986 Cal. Stat. ch. 820 § 7) which referred to consideration. For background on the provisions of this division, see the Comment to this division under the division heading.

§ 15209. Exception to doctrine of merger

Comment. Section 15209 continues Section 15209 of the repealed Probate Code without change. See also In re Estate of Washburn, 11 Cal. App. 735, 746, 106 P. 415 (1909) (merger of legal and equitable estates).

Background on Section 15209 of Repealed Code

Section 15209 was added by 1986 Cal. Stat. ch. 820 § 40. The section restated the first sentence of former Civil Code Section 2225 (repealed by 1986 Cal. Stat. ch. 820 § 7) without substantive change. For background on the provisions of this division, see the Comment to this division under the division heading.

§ 15210. Recording of trust relating to real property

Comment. Section 15210 continues Section 15210 of the repealed Probate Code without change.

Background on Section 15210 of Repealed Code

Section 15210 was a new provision added by 1987 Cal. Stats. ch. 1184 § 10. For background on the provisions of this division, see the Comment to this division under the division heading.

CHAPTER 2. RESTRICTIONS ON VOLUNTARY AND INVOLUNTARY TRANSFERS

§ 15300. Restraint on transfer of income

Comment. Section 15300 continues Section 15300 of the repealed Probate Code without change. For qualifications of the protection provided by Section 15300, see Sections 15304 (settlor as beneficiary), 15305 (claim for child or spousal support), 15306 (claim for reimbursement of public support), 15306.5 (right of general creditors to reach maximum of one-fourth of payments due beneficiary), 15307 (amount of income in excess of amount needed for education and support subject to creditors' claims). Once the income is paid to the beneficiary, it is subject to claims of creditors. Kelly v. Kelly, 11 Cal. 2d 356, 362-65, 79 P.2d 1059 (1938).

Background on Section 15300 of Repealed Code

Section 15300 was added by 1986 Cal. Stat. ch. 820 § 40. The section continued the power of a settlor to restrain transfer of the beneficiary's interest in income that was provided in former Civil Code Section 867 (repealed by 1986 Cal. Stat. ch. 820 § 5). The reference in former Civil Code Section 867 to restraints during the life of the beneficiary or for a term of years was not continued because it was unnecessary. The settlor was free to impose a restraint for a term of years under Section 15300. For background on the provisions of this division, see the Comment to this division under the division heading.

§ 15301. Restraint on transfer of principal

Comment. Section 15301 continues Section 15301 of the repealed Probate Code without change.

Subdivision (a) makes clear that a restraint on voluntary or involuntary transfer of principal is valid. This rule is consistent with the result in several California cases. See Seymour v. McAvoy, 121 Cal. 438, 444, 53 P. 946 (1898) (creditor could not reach contingent remainder); San Diego Trust & Sav. Bank v. Heustis, 121 Cal. App. 675, 683-85, 694-97, 10 P.2d 158 (1932) (where husband was income and remainder beneficiary, estranged wife could not reach trust funds for support); Coughran v. First Nat'l Bank, 19 Cal. App. 2d 152, 64 P.2d 1013 (1937) (in an action to quiet title, attachment levied against beneficiary's contingent fractional interest in trust property was held invalid). There was no clear holding

under prior California law as to the validity of disabling restraints on transfer of trust principal by a vested remainder beneficiary.

Subdivision (b) permits a creditor to reach principal that is due or payable to the beneficiary, notwithstanding a spendthrift provision in the trust. Under prior California law, there was no decision determining whether a judgment creditor could reach principal held by the trustee that was due or payable where the beneficiary's interest was subject to a restraint on transfer.

For qualifications of the protection provided by Section 15301, see Sections 15304 (settlor as beneficiary), 15305 (claim for child or spousal support), 15306 (claim for reimbursement of public support), 15306.5 (right of general creditors to reach maximum of one-fourth of payments due beneficiary), 15307 (amount of income in excess of amount needed for education and support subject to creditors' claims). Where trust principal that was subject to a restraint on transfer has been paid to the beneficiary, it is subject to the claims against the beneficiary. See Kelly v. Kelly, 11 Cal. 2d 356, 362-65, 79 P.2d 1059 (1938).

For general provisions relating to petitions and other papers, see Sections 1020-1023, 17201; see also Sections 1021 (petition to be verified), 1041 (clerk to set petition for hearing). For general provisions relating to notice of hearing, see Sections 1200-1221, 15802-15804, 17100-17105, 17203-17205; see also Sections 1260-1265 (proof of giving notice). For general provisions relating to hearings and orders, see Sections 1040-1050, 17000-17006, 17201-17202, 17206-17207.

Background on Section 15301 of Repealed Code

Section 15301 was a new provision added by 1986 Cal. Stat. ch. 820 § 40. For background on the provisions of this division, see the Comment to this division under the division heading.

§ 15302. Trust for support

Comment. Section 15302 continues Section 15302 of the repealed Probate Code without change.

This section is the same in substance as Section 154 of the Restatement (Second) of Trusts (1957), but is drafted to make clear that the protection applies to the extent that a trust provides for the education or support of the beneficiary and not only where the trust provides solely for the payment of an amount for education or support. Section 15302 is consistent with prior California law. See former Civil Code § 859 (repealed by 1986 Cal. Stat. ch. 820 § 5); Seymour v. McAvoy, 121 Cal. 438, 442-44, 53 P. 946 (1898).

For qualifications of the protection provided by Section 15302, see Sections 15304 (settlor as beneficiary), 15305 (claim for child or spousal

support), 15306 (claim for reimbursement of public support), 15306.5 (right of general creditors to reach maximum of one-fourth of payments due beneficiary), 15307 (amount of income in excess of amount needed for education and support subject to creditors' claims).

Background on Section 15302 of Repealed Code

Section 15302 was a new provision added by 1986 Cal. Stat. ch. 820 § 40. For background on the provisions of this division, see the Comment to this division under the division heading.

§ 15303. Transferee or creditor cannot compel trustee to exercise discretion; liability of trustee for payment to or for beneficiary

Comment. Section 15303 continues Section 15303 of the repealed Probate Code without change.

Subdivisions (a) and (b) are drawn from Section 155 of the Restatement (Second) of Trusts (1957), and provide that a judgment creditor cannot compel the trustee of a discretionary trust to pay any part of the discretionary trust income or principal, although a judgment creditor may be able to reach any payment the trustee does decide to make. Subdivisions (a) and (b) are consistent with prior California law. See Canfield v. Security-First Nat'l Bank, 13 Cal. 2d 1, 30-31, 87 P.2d 830 (1939) (citing Restatement of Trusts § 155); Alvis v. Bank of America, 95 Cal. App. 2d 118, 124, 212 P.2d 608 (1949).

Unlike Section 155 of the Restatement, Section 15303 applies whether or not the trustee's discretion is subject to a standard. See Section 15303(c). The Restatement provision applies only where the trustee has "uncontrolled discretion." Accordingly, under Section 15303, even though the beneficiary of the trust could compel the trustee to make payment pursuant to the standard set out in the trust instrument, the transferee or creditor has no similar right to compel the payment.

Subdivision (d) makes clear that this section does not affect or limit any right the beneficiary (as distinguished from a transferee or creditor of the beneficiary) may have to compel payment. See Estate of Ferrall, 41 Cal. 2d 166, 258 P.2d 1009 (1953) (whether fraud, bad faith, or an abuse of discretion has been committed by trustees in refusing to make payments for the support of the beneficiary of a discretionary trust is subject to review by the court). See also Estate of Miller, 230 Cal. App. 2d 888, 41 Cal. Rptr. 410 (1964) (court required trustee to make payments to beneficiary).

Background on Section 15303 of Repealed Code

Section 15303 was a new provision added by 1986 Cal. Stat. ch. 820 § 40. For background on the provisions of this division, see the Comment to this division under the division heading.

§ 15304. Where settlor is a beneficiary

Comment. Section 15304 continues Section 15304 of the repealed Probate Code without change.

The first sentence of subdivision (a) is the same in substance as Section 156(1) of the Restatement (Second) of Trusts (1957). See the comments to Restatement § 156. Subdivision (a) codifies the case-law rule applicable under prior law. See, e.g., Nelson v. California Trust Co., 33 Cal. 2d 501, 202 P.2d 1021 (1949). This section does not affect the protection of certain pension trusts by Code of Civil Procedure Section 704.115. See Section 82 ("trusts" defined to exclude trusts for the primary purpose of paying pensions).

Subdivision (b) is drawn from Section 156(2) of the Restatement (Second) of Trusts (1957). The limitation on the amount that may be reached by transferees and creditors to the proportionate amount of the settlor's contribution is drawn from Wisconsin law. See Wis. Stat. Ann. § 701.06(6) (West 1981); see also the comments to Restatement § 156.

A person who furnishes the consideration for the creation of a trust is the settlor. McColgan v. Walter Magee, Inc., 172 Cal. 182, 155 P. 995 (1916) (beneficiary transferred assets into trust although certain other persons could have prevented transfer by refusal to consent); Parscal v. Parscal, 148 Cal. App. 3d 1098, 1104-05, 196 Cal. Rptr. 462 (1983) (child support enforceable against beneficiary's interest in trust created by beneficiary's employers under a collective bargaining agreement with benefit credits according to the amount contributed by employers to employee's account).

Background on Section 15304 of Repealed Code

Section 15304 was a new provision added by 1986 Cal. Stat. ch. 820 § 40. For background on the provisions of this division, see the Comment to this division under the division heading.

§ 15305. Claims for child or spousal support

Comment. Section 15305 continues Section 15305 of the repealed Probate Code without change.

This section is drawn in part from a provision of Wisconsin law relating to enforcement of child support. See Wis. Stat. Ann. § 701.06(4) (West 1981). Section 15305 reflects the same public policy as Section 157(a) of the Restatement (Second) of Trusts (1957). To obtain relief under Section 15305, the judgment creditor under the support judgment must file a petition with the court under Section 709.010 of the Code of Civil Procedure. For general provisions relating to petitions and other papers, see Sections 1020-1023, 17201; see also Sections 1021 (petition to be verified), 1041 (clerk to set petition for hearing). For general

provisions relating to notice of hearing, see Sections 1200-1221, 15802-15804, 17100-17105, 17203-17205; see also Sections 1260-1265 (proof of giving notice). For general provisions relating to hearings and orders, see Sections 1040-1050, 17000-17006, 17201-17202, 17206-17207; see also Section 15308.

Although a trust is a spendthrift trust or a trust for support, the interest of the beneficiary can be reached in satisfaction of a money judgment against the beneficiary for child or spousal support. In some cases a spendthrift clause may be construed as not intended to exclude the beneficiary's dependents. Even if the clause is construed as applicable to claims of the dependents for support, it is against public policy to give full effect to the provision. A provision in the trust is not effective to exempt the trust from enforcement of a judgment for support of a minor child or support of a spouse or former spouse. See subdivision (b). As a general rule, the beneficiary should not be permitted to have the enjoyment of the interest under the trust while neglecting to support his or her dependents. It is a matter for the exercise of discretion by the court as to how much of the amount payable to the beneficiary under the trust should be applied for such support and how much the beneficiary should receive. Even though the beneficiary's spouse has obtained an order directing the beneficiary to pay a specified amount for support, the spouse cannot compel the trustee to pay the full amount ordered unless the court determines that it is equitable and reasonable under the circumstances of the particular case to compel the trustee to make the payment. The result is much the same as though the trust were created not solely for the benefit of the beneficiary, but also for the benefit of the beneficiary's dependents. Cf. Estate of Johnston, 252 Cal. App. 2d 923, 927-30, 60 Cal. Rptr. 852 (1967) (discussion of public policy in light of former Civil Code § 859).

Background on Section 15305 of Repealed Code

Section 15305 was a new provision added by 1986 Cal. Stat. ch. 820 § 40. The section changed prior California law. Code of Civil Procedure Section 709.010 (prior to its amendment by 1986 Cal. Stat. ch. 820 § 18) included a provision giving the court discretion to divide periodic payments to a beneficiary from a trust (including a spendthrift trust) between the beneficiary and the person or persons entitled to child or spousal support from the beneficiary. The amount that could be applied to child or spousal support was limited to the amount that could have been applied to child or spousal support on a like amount of earnings. This provision was removed from Section 709.010, leaving Section 15305 to govern this situation. Apart from the provision in Code of Civil Procedure Section 709.010, under prior law child or spousal support was not a preferred claim against the interest of a trust beneficiary, and the support claimant was treated the same as any other creditor. See, e.g., Estate of Lawrence, 267 Cal. App. 2d 77, 82-83, 72 Cal. Rptr. 851 (1968) (former wife); Canfield v. Security-First Nat'l Bank, 8 Cal. App. 2d 277, 288-89, 48 P.2d 133 (1935)

(former wife); San Diego Trust & Sav. Bank v. Heustis, 121 Cal. App. 675, 683-94, 10 P.2d 158 (1932) (estranged wife); Estate of Johnston, 252 Cal. App. 2d 923, 928-29, 60 Cal. Rptr. 852 (1967) (minor child); but see Parscal v. Parscal, 148 Cal. App. 3d 1098, 1104-05, 196 Cal. Rptr. 462 (1983) (child support enforceable against beneficiary's interest in trust created by beneficiary's employers under a collective bargaining agreement where employer's contributions based on employee's hours of work); cf. Estate of Lackmann, 156 Cal. App. 2d 674, 678-83, 320 P.2d 186 (1958) (state institution in which beneficiary of a spendthrift trust was an inmate permitted to reach the beneficiary's interest). For background on the provisions of this division, see the Comment to this division under the division heading.

§ 15306. Liability for public support

Comment. Section 15306 continues Section 15306 of the repealed Probate Code without substantive change. This section is drawn from Wisconsin law. See Wis. Stat. Ann. § 701.06(5)-(5m) (West 1981).

Subdivision (a) is generally consistent with prior California law which permitted a state institution in which the beneficiary of a spendthrift trust was an inmate to reach the beneficiary's interest. See Estate of Lackmann, 156 Cal. App. 2d 674, 678-83, 320 P.2d 186 (1958) (citing Restatement of Trusts § 157). Section 15306 applies to reimbursement for public support provided in the form of aid furnished to an individual who is not in an institution as well as aid furnished while the individual is a resident of a state institution. See, e.g., Welf. & Inst. Code §§ 903 (liability for support of minor under order of juvenile court), 17403 (liability for support of indigent from public funds). However, subdivision (a) of Section 15306 makes clear that the state or local agency has the right to reach the beneficiary's interest for reimbursement of support provided to the spouse or minor child of the beneficiary.

Subdivision (b) limits the right of the state or a local agency to reach the beneficiary's interest in welfare cases where the trust was established to provide for the care of a disabled beneficiary who is unable to provide for his or her own care or custody. This limitation is intended to encourage potential settlors to provide in a trust for the care or support of a disabled person without the risk that the benefits of the trust will be taken to reimburse a public agency for a minimal level of support provided by the public agency. However, this rule is subject to the exception provided in the last sentence of subdivision (b).

For general provisions relating to petitions and other papers, see Sections 1020-1023, 17201; see also Sections 1021 (petition to be verified), 1041 (clerk to set petition for hearing). For general provisions relating to notice of hearing, see Sections 1200-1221, 15802-15804, 17100-17105, 17203-17205; see also Sections 1260-1265 (proof of giving notice). For general provisions relating to hearings and orders, see

Sections 1040-1050, 17000-17006, 17201-17202, 17206-17207; see also Section 15308.

Background on Section 15306 of Repealed Code

Section 15306 was a new provision added by 1986 Cal. Stat. ch. 820 § 40. The section was amended by 1989 Cal. Stat. ch. 748 § 2 to add the last sentence to subdivision (b). For background on the provisions of this division, see the Comment to this division under the division heading.

§ 15306.5. Rights of general creditors

Comment. Section 15306.5 continues Section 15306.5 of the repealed Probate Code without change.

Subdivision (a) permits general creditors to seek to satisfy a money judgment from payments that are to be made to a trust beneficiary. This right applies to payments that are required by the terms of the trust or that are determined by the trustee in the exercise of the trustee's discretion under the trust. Subdivision (e), however, makes clear that the right of the creditor does not affect any discretion the trustee may have under the trust instrument to change the amount of the payment, or even to cease payment altogether. See also Section 15307 (creditor's right to reach income in excess of amount for education and support). As provided in the introductory clause, this creditor's right applies regardless of a restraint on transfer provided in the trust instrument.

The creditor's right under subdivision (a) is subject to important limitations provided in subdivisions (b) and (c). Subdivision (b) provides a maximum amount that the creditor can reach, equal to 25 percent of each payment. This provision is comparable to the rule that applied under former subdivision (c) of Code of Civil Procedure Section 709.010 (prior to its amendment by 1986 Cal. Stat. ch. 820 § 18) (incorporating the wage garnishment withholding standard of Code of Civil Procedure Section 706.050). See Code Civ. Proc. § 706.050 and the Comment thereto.

Subdivision (c) protects part or all of the payment that otherwise would be applied to the judgment where the amount is necessary for the support of the beneficiary and persons the beneficiary is required to support. This provision is comparable to Code of Civil Procedure Section 706.051 (wage garnishment exemption) which was incorporated by former subdivision (c) of Code of Civil Procedure Section 709.010 for purposes of enforcement of money judgments against trust payments.

Subdivision (d) makes clear that an order in favor of a creditor under this section is subject to the claim of a creditor who has obtained an order for enforcement of a support judgment, i.e., a minor child, spouse, or former spouse. The second sentence of subdivision (d) makes clear that the priority of support judgments does not depend on the time of issuance

of the order for enforcement. This scheme is comparable to the priority that applies to earnings withholding orders under the Wage Garnishment Law. See Code Civ. Proc. § 706.030(b)(2). It should also be noted that while a spouse, former spouse, or minor child enforcing a support judgment may use this section, in the normal case support creditors will apply under Section 15305. The limitations provided in this section do not apply to enforcement of a support judgment under Section 15305.

Subdivision (f) limits the aggregate amount of the beneficiary's interest in one trust that is subject to enforcement where several creditors have obtained orders. Thus, if one creditor is receiving 25 percent of the payment that otherwise would have been made to the beneficiary, a second general creditor will not be able to reach any of the payment in the hands of the trustee. If one creditor is receiving 15 percent, a second general creditor can reach only 10 percent of the original amount of the payment. Of course, the aggregate amount of all orders may be less than 25 percent if the court has determined under subdivision (c) that more than 75 percent of the original payment is necessary for the beneficiary's support. The introductory clause of subdivision (f) recognizes that the 25 percent limitation does not affect the amount that may be reached in satisfaction of a support judgment.

For general provisions relating to petitions and other papers, see Sections 1020-1023, 17201; see also Sections 1021 (petition to be verified), 1041 (clerk to set petition for hearing). For general provisions relating to notice of hearing, see Sections 1200-1221, 15802-15804, 17100-17105, 17203-17205; see also Sections 1260-1265 (proof of giving notice). For general provisions relating to hearings and orders, see Sections 1040-1050, 17000-17006, 17201-17202, 17206-17207; see also Section 15308.

Background on Section 15306.5 of Repealed Code

Section 15306.5 was added by 1986 Cal. Stat. ch. 820 § 40. The section restated the substance of former provisions of Code of Civil Procedure Section 709.010 (prior to its amendment by 1986 Cal. Stat. ch. 820 § 18). For background on the provisions of this division, see the Comment to this division under the division heading.

§ 15307. Income in excess of amount for education and support subject to creditors' claims

Comment. Section 15307 continues Section 15307 of the repealed Probate Code without change.

While Sections 15305 and 15306 permit only certain preferred creditors to reach the beneficiary's interest in the trust, Section 15307 permits an ordinary creditor to reach income under limited circumstances. To obtain relief under Section 15307, the judgment

creditor must file a petition under Section 709.010 of the Code of Civil Procedure. See Code Civ. Proc. § 709.010(b). For general provisions relating to petitions and other papers, see Sections 1020-1023, 17201; see also Sections 1021 (petition to be verified), 1041 (clerk to set petition for hearing). For general provisions relating to notice of hearing, see Sections 1200-1221, 15802-15804, 17100-17105, 17203-17205; see also Sections 1260-1265 (proof of giving notice). For general provisions relating to hearings and orders, see Sections 1040-1050, 17000-17006, 17201-17202, 17206-17207; see also Section 15308.

Under Code of Civil Procedure Section 709.010, the court may make a continuing order for application of future payments to the satisfaction of the judgment. It should also be noted, however, that a creditor does not have the power to compel the trustee to exercise discretion. See Section 15303.

The introductory clause of Section 15307 makes clear that this section applies only to a trust in which transfer of the beneficiary's interest is restrained. Section 15307 does not apply to enforcement against a trust that does not restrain transfer of the beneficiary's interest; the entire interest of a beneficiary under such a trust may be applied to the satisfaction of a money judgment under Code of Civil Procedure Section 709.010.

A station-in-life test is used to determine the amount necessary for education and support under this section. See Canfield v. Security-First Nat'l Bank, 13 Cal. 2d 1, 21-24, 87 P.2d 830 (1939); Magner v. Crooks, 139 Cal. 640, 642, 73 P. 585 (1903); Smith v. Smith, 51 Cal. App. 2d 29, 35-38, 124 P.2d 117 (1942); cf. Alvis v. Bank of America, 95 Cal. App. 2d 118, 122-24, 212 P.2d 608 (1949) (beneficiary who had disappeared). The California Supreme Court has rejected the more extreme New York cases, but has continued to embrace the station-in-life test which considers factors such as the social background of the beneficiary. See, e.g., Canfield v. Security-First Nat'l Bank, 13 Cal. 2d 1, 24-28, 87 P.2d 830 (1939). If the trustee has discretion to determine the disposition of the trust income, the trustee may be able to defeat the creditor's attempt to reach the excess income under this section by reducing the amount to be paid to the beneficiary to the amount determined by the court to be necessary for the support and education of the beneficiary. See Estate of Canfield, 80 Cal. App. 2d 443, 450-52, 181 P.2d 732 (1947); E. Griswold, Spendthrift Trusts § 428 (2d ed. 1947).

Other provisions may permit a creditor of the beneficiary to satisfy all or part of the creditor's claim out of all or part of the payments of the income or principal as they fall due, presently or in the future. See

Sections 15305 (child or spousal support), 15306 (public support); see also Section 15304 (settlor as beneficiary).

Background on Section 15307 of Repealed Code

Section 15307 was added by 1986 Cal. Stat. ch. 820 § 40. The section replaced former Civil Code Section 859 (repealed by 1986 Cal. Stat. ch. 820 § 5). For background on the provisions of this division, see the Comment to this division under the division heading.

§ 15308. Subsequent modification of court's order

Comment. Section 15308 continues Section 15308 of the repealed Probate Code without change. This section is drawn from Wisconsin law. See Wis. Stat. Ann. § 701.06(7) (West 1981). See also Section 48 ("interested person" defined).

Background on Section 15308 of Repealed Code

Section 15308 was a new provision added by 1986 Cal. Stat. ch. 820 § 40. For background on the provisions of this division, see the Comment to this division under the division heading.

§ 15309. Disclaimer not a transfer

Comment. Section 15309 continues Section 15309 of the repealed Probate Code without change. This section is drawn from Wisconsin law. See Wis. Stat. Ann. § 701.06(3) (West 1981).

Background on Section 15309 of Repealed Code

Section 15309 was a new provision added by 1986 Cal. Stat. ch. 820 § 40. For background on the provisions of this division, see the Comment to this division under the division heading.

CHAPTER 3. MODIFICATION AND TERMINATION OF TRUSTS

§ 15400. Presumption of revocability

Comment. Section 15400 continues Section 15400 of the repealed Probate Code without change. For the procedure for revoking a trust, see Section 15401. See also Section 15402 (power to revoke includes power to modify).

Background on Section 15400 of Repealed Code

Section 15400 was added by 1986 Cal. Stat. ch. 820 § 40. The first sentence of Section 15400 restated part of the first sentence of former Civil Code Section 2280 (repealed by 1986 Cal. Stat. ch. 820 § 7) without substantive change. The second sentence was a new provision that limited the application of the California rule presuming revocability. For background on the provisions of this division, see the Comment to this division under the division heading.

§ 15401. Method of revocation by settlor; limit on modification or revocation pursuant to power of attorney

Comment. Section 15401 continues Section 15401 of the repealed Probate Code without change.

The settlor may revoke a revocable trust in the manner provided in subdivision (a)(2), unless there is a contrary provision in the trust. This changes the rule under prior case law. See Rosenauer v. Title Ins. & Trust Co., 30 Cal. App. 3d 300, 304, 106 Cal. Rptr. 321 (1973). The settlor may not revoke a trust by a will under subdivision (a)(2), even if the will purporting to revoke is delivered to the trustee during the lifetime of the settlor. However, the settlor may revoke by will if the trust so provides, pursuant to subdivision (a)(1). See Restatement (Second) of Trusts § 330 comment j (1957).

Under subdivision (b), a provision in the power of attorney permitting the attorney in fact to revoke or modify the trust is ineffective unless the trust instrument expressly authorizes revocation by the attorney in fact. See, e.g., Civil Code § 2467(a)(5) (provision in statutory power of attorney form permitting exercise of principal's power to revoke). See also Civil Code §§ 2400-2407 (Uniform Durable Power of Attorney Act), 2450-2473 (statutory short form power of attorney).

Subdivision (c) clarifies the relation of this section to other sections permitting modification and termination of trusts.

Subdivision (d) preserves the prior law governing the manner of revocation. Hence, if a trust created by an instrument executed before July 1, 1987, provides the manner of revocation, the statutory method provided in subdivision (a) is not available.

Background on Section 15401 of Repealed Code

Section 15401 was added by 1986 Cal. Stat. ch. 820 § 40 and was amended by 1988 Cal. Stat. ch. 113 § 19. Subdivision (a) superseded part of the first sentence of former Civil Code Section 2280 (repealed by 1986 Cal. Stat. ch. 820 § 7). The remainder of the section was new. For background on the provisions of this division, see the Comment to this division under the division heading.

The 1988 amendment revised subdivision (b) to make clear that the rule applicable to revocation by an attorney in fact applies to modification. This made subdivision (b) consistent with the rule provided in Section 15402. For background on the 1988 amendment, see *Communication from the California Law Revision Commission Concerning Assembly Bill 2779*, 19 Cal. L. Revision Comm'n Reports 1191, 1199 (1988).

§ 15402. Power to revoke includes power to modify

Comment. Section 15402 continues Section 15402 of the repealed Probate Code without change. This section codifies the general rule that a power of revocation implies the power of modification. See Heifetz v. Bank of America Nat'l Trust & Sav. Ass'n, 147 Cal. App. 2d 776, 781-82, 305 P.2d 979 (1957); Restatement (Second) of Trusts § 331 comment g (1957). An unrestricted power to modify may also include the power to revoke a trust. See Heifetz v. Bank of America Nat'l Trust & Sav. Ass'n, supra, at 784; Restatement (Second) of Trusts § 331 comment h (1957).

See also Sections 15600 (trustee's acceptance of modification of trust), 15601 (trustee's rejection of modification of trust).

Background on Section 15402 of Repealed Code

Section 15402 was a new provision added by 1986 Cal. Stat. ch. 820 § 40. For background on the provisions of this division, see the Comment to this division under the division heading.

§ 15403. Modification or termination of irrevocable trust by all beneficiaries

Comment. Section 15403 continues Section 15403 of the repealed Probate Code without change.

This section is drawn from Section 337 of the Restatement (Second) of Trusts (1957). Unlike the Restatement, however, subdivision (b) gives the court some discretion in applying the material purposes doctrine except in situations where transfer of the beneficiary's interest is restrained, such as by a spendthrift provision. See Section 15300 (restraint on transfer of beneficiary's interest). Section 15403 permits termination of an irrevocable trust with the consent of all beneficiaries where the trust provides for successive beneficiaries or postpones enjoyment of a beneficiary's interest. The discretionary power provided in subdivision (b) also represents a change in the prior California case-law rule. See, e.g., Moxley v. Title Ins. & Trust Co., 27 Cal. 2d 457, 462, 165 P.2d 15 (1946). Section 15403 is intended to provide some degree of flexibility in applying the material purposes doctrine in situations where transfer of the beneficiary's interest is not restrained. For provisions governing judicial proceedings, see Section 17200 et seq. For provisions relating to obtaining consent of persons under an incapacity, see, e.g., Civil Code §§ 2450, 2467 (statutory form of durable power of attorney); Prob. Code §§ 2580 (conservator), 1003 & 15405 (appointment of guardian ad litem). See also Section 15406 (rebuttable presumption of fertility). For provisions governing modification and termination of trusts where the consent of all beneficiaries cannot be obtained, see Sections 15408 (trust with uneconomically low principal) and 15409 (modification or termination by court order in changed circumstances).

Subdivision (a) limits the application of this section to irrevocable trusts since if the trust is revocable by the settlor, the method of revocation is governed by Section 15401. Compare Section 15404 (modification or termination by settlor and all beneficiaries).

For general provisions relating to petitions and other papers, see Sections 1020-1023, 17201; see also Sections 1021 (petition to be verified), 1041 (clerk to set petition for hearing). For general provisions

relating to notice of hearing, see Sections 1200-1221, 15802-15804, 17100-17105, 17203-17205; see also Sections 1260-1265 (proof of giving notice). For general provisions relating to hearings and orders, see Sections 1040-1050, 17000-17006, 17201-17202, 17206-17207.

Background on Section 15403 of Repealed Code

Section 15403 was a new provision added by 1986 Cal. Stat. ch. 820 § 40. For background on the provisions of this division, see the Comment to this division under the division heading.

§ 15404. Modification or termination by settlor and all beneficiaries

Comment. Section 15404 continues Section 15404 of the repealed Probate Code without change. Subdivisions (a) and (b) are drawn from Section 338 of the Restatement (Second) of Trusts (1957).

A trust may be modified or terminated pursuant to this section without court approval, but a court order may be sought by petition under Section 17200. A revocable trust may be modified or terminated pursuant to this section, as in a case where the method of modification or revocation specified in the trust is found to be overly restrictive. See Section 15401; compare Section 15801 (consent by beneficiary of revocable trust). However, nothing in this section affects the right of a settlor to revoke or modify a revocable trust under Section 15401. For provisions relating to obtaining consent of persons under an incapacity, see, e.g., Civil Code §§ 2450, 2467 (statutory form of durable power of attorney); Prob. Code §§ 2580 (conservator), 1003 & 15405 (appointment of guardian ad litem). See also Section 15406 (rebuttable presumption of fertility). A trust may be modified or terminated under this section regardless of any provision in the trust restraining transfer of the beneficiary's interest and regardless of whether its purposes have been achieved. See Restatement (Second) of Trusts § 338 comments b-d (1957).

Subdivision (c) reinstates a limited form of the doctrine of worthier title. The doctrine of worthier title was abolished in California in 1959 upon recommendation of the California Law Revision Commission. See 1959 Cal. Stat. ch. 122. See also *Recommendation and Study Relating to The Doctrine of Worthier Title,* 2 Cal. L. Revision Comm'n Reports D-1 (1959). Under subdivision (c), the need to obtain the consent of persons constituting the class of heirs or next of kin of the settlor may be excused by the court as to beneficiaries (typically unborn or remote beneficiaries) who are not reasonably likely to take principal under the trust. This limitation protects the interests of beneficiaries who are likely to take while permitting the settlor to modify or terminate an otherwise irrevocable trust in line with the probable intent of the settlor.

For general provisions relating to petitions and other papers, see Sections 1020-1023, 17201; see also Sections 1021 (petition to be verified), 1041 (clerk to set petition for hearing). For general provisions relating to notice of hearing, see Sections 1200-1221, 15802-15804, 17100-17105, 17203-17205; see also Sections 1260-1265 (proof of giving notice). For general provisions relating to hearings and orders, see Sections 1040-1050, 17000-17006, 17201-17202, 17206-17207.

Background on Section 15404 of Repealed Code

Section 15404 was added by 1986 Cal. Stat. ch. 820 § 40. Subdivision (a) restated the substance of the rule formerly provided by the second sentence of the second paragraph of Civil Code Section 771 (repealed by 1986 Cal. Stat. ch. 820 § 4) and superseded part of former Civil Code Section 2258(a) (repealed by 1986 Cal. Stat. ch. 820 § 7). Subdivisions (b) and (c) were new. For background on the provisions of this division, see the Comment to this division under the division heading.

§ 15405. Guardian ad litem

Comment. Section 15405 continues Section 15405 of the repealed Probate Code without change. This section recognizes that, where appropriate, a guardian ad litem may give consent to modification or termination on behalf of a beneficiary who lacks legal capacity (including a minor) or who is an unascertained or unborn person. The second sentence of the section permits a non-pecuniary quid pro quo as a basis for protecting the interests of the beneficiaries represented by the guardian ad litem. This provision is drawn from Wisconsin law. Wis. Stat. Ann. § 701.12(2) (West 1981). Under this rule, the guardian ad litem may rely on the assumption that a benefit conferred on potential parents will ultimately benefit a child who might be born into the family. On the quid pro quo doctrine generally, see Hatch v. Riggs Nat'l Bank, 361 F.2d 559 (D.C. Cir. 1966).

Background on Section 15405 of Repealed Code

Section 15405 was a new provision added by 1986 Cal. Stat. ch. 820 § 40 and amended by 1987 Cal. Stat. ch. 128 § 9. For background on the provisions of this division, see the Comment to this division under the division heading.

§ 15406. Rebuttable presumption of fertility

Comment. Section 15406 continues Section 15406 of the repealed Probate Code without change. This section abandons the "fertile octogenarian" doctrine as applied in the context of trust termination. Under this section, the way is open for the court to approve a termination where the possibility of the birth of additional beneficiaries is negligible. See Restatement (Second) of Trusts § 340 comment e (1957). Section 15406 thus adopts the modern view that fertility may not be a realistic issue or is subject to proof. See 4 A. Scott, The Law of Trusts § 340.1, at 513 (4th ed. 1987). This section rejects the prior California case-law

rule. See Fletcher v. Los Angeles Trust & Sav. Bank, 182 Cal. 177, 184, 187 P. 425 (1920); Wogman v. Wells Fargo Bank & Union Trust Co., 123 Cal. App. 2d 657, 665, 267 P.2d 423 (1954).

Background on Section 15406 of Repealed Code

Section 15406 was a new provision added by 1986 Cal. Stat. ch. 820 § 40. For background on the provisions of this division, see the Comment to this division under the division heading.

§ 15407. Termination of trust; trustee's powers on termination

Comment. Section 15407 continues Section 15407 of the repealed Probate Code without change. Subdivision (a) lists the ways in which trusts typically may terminate. Paragraph (1) codifies a prior case-law rule. See In re Estate of Hanson, 159 Cal. 401, 405, 114 P. 810 (1911); Restatement (Second) of Trusts § 334 (1957). Subdivision (b) makes clear that even though the trust has terminated, the trustee retains limited powers needed to wind up the affairs of the trust. For other provisions relating to trustees' powers, see Section 16200 et seq.

Background on Section 15407 of Repealed Code

Section 15407 was added by 1986 Cal. Stat. ch. 820 § 40. Paragraphs (1) and (5) of subdivision (a) were new. Paragraphs (2), (3), and (4) of subdivision (a) restated former Civil Code Section 2279 (repealed by 1986 Cal. Stat. ch. 820 § 7) without substantive change. Subdivision (b) was new. For background on the provisions of this division, see the Comment to this division under the division heading.

§ 15408. Trust with uneconomically low principal

Comment. Section 15408 continues Section 15408 of the repealed Probate Code without change. For general provisions relating to petitions and other papers, see Sections 1020-1023, 17201; see also Sections 1021 (petition to be verified), 1041 (clerk to set petition for hearing). For general provisions relating to notice of hearing, see Sections 1200-1221, 15802-15804, 17100-17105, 17203-17205; see also Sections 1260-1265 (proof of giving notice). For general provisions relating to hearings and orders, see Sections 1040-1050, 17000-17006, 17201-17202, 17206-17207. See also Section 15800 (limits on rights of beneficiary of revocable trust).

Subdivision (b) gives the trustee the power to terminate a trust with a principal value of $20,000 or less. In such case, the trustee need not seek court approval for termination of the trust; the presumption is established that a $20,000 trust is inherently uneconomical. A trustee has discretion, however, to seek court approval under Section 17200(b)(5) (approval of trustee's accounts), and even in a case where the trustee has determined to terminate the trust under subdivision (b), the trustee may seek instructions on the correct manner of distributing the trust property. See

Sections 15410 (disposition of property upon termination), 17200(b)(4) (determining to whom property passes on termination).

Background on Section 15408 of Repealed Code

Section 15408 was added by 1986 Cal. Stat. ch. 820 § 40. Subdivisions (a) and (c) restated without substantive change subdivisions (a) and (d) of former Civil Code Section 2279.1 (repealed by 1986 Cal. Stat. ch. 820 § 7) and subdivisions (a) and (d) of former Probate Code Section 1120.6 (repealed by 1986 Cal. Stat. ch. 820 § 31). Subdivision (b) was new. For background on the provisions of this division, see the Comment to this division under the division heading.

§ 15409. Modification or termination in changed circumstances

Comment. Section 15409 continues Section 15409 of the repealed Probate Code without change. Subdivision (a) is drawn from Sections 167 and 336 of the Restatement (Second) of Trusts (1957). Subdivision (b) is drawn from a provision of the Texas Trust Code. See Tex. Prop. Code Ann. § 112.054 (Vernon 1984). See also Sections 15800 (limits on rights of beneficiary of revocable trust), 16201 (power of court to relieve trustee from restrictions on powers). Modification of the dispositive provisions of a trust for the support of a beneficiary may be appropriate, for example, in a case where the beneficiary has become unable to support himself or herself due to poor health or serious injury. See, e.g., Whittingham v. California Trust Co., 214 Cal. 128, 4 P.2d 142 (1931). See also Civil Code § 726 (accelerated distribution of accumulations to destitute beneficiaries).

For general provisions relating to petitions and other papers, see Sections 1020-1023, 17201; see also Sections 1021 (petition to be verified), 1041 (clerk to set petition for hearing). For general provisions relating to notice of hearing, see Sections 1200-1221, 15802-15804, 17100-17105, 17203-17205; see also Sections 1260-1265 (proof of giving notice). For general provisions relating to hearings and orders, see Sections 1040-1050, 17000-17006, 17201-17202, 17206-17207.

Background on Section 15409 of Repealed Code

Section 15409 was a new provision added by 1986 Cal. Stat. ch. 820 § 40. For background on the provisions of this division, see the Comment to this division under the division heading.

§ 15410. Disposition of property upon termination

Comment. Section 15410 continues Section 15410 of the repealed Probate Code without change.

Subdivisions (a) and (b) recognize that the persons holding the power to modify a trust have the power to direct the manner of distribution of property upon termination. See Section 15402 (power to revoke includes power to modify), 15403 (termination by all beneficiaries), 15404 (termination by settlor and all beneficiaries).

Subdivision (c) applies to the cases not described in subdivisions (a) and (b). Subdivision (c) applies to cases where the trust terminates under its own terms, such as the expiration of a term of years or the occurrence of an event. See Section 15407(a)(1)-(2). Subdivision (c) also applies to cases where the trust is terminated pursuant to a court order without the consent of the settlor and beneficiaries. See, e.g., Sections 15407(a)(3) (termination where trust purpose becomes unlawful), 15407(a)(4) (termination where trust purpose becomes impossible to fulfill), 15408 (termination of trust with uneconomically low principal), 15409 (termination in changed circumstances).

Subdivision (d) provides for the application of subdivision (c) without the need for a court order in a case where a trustee has terminated a trust having a principal value of $20,000 or less pursuant to Section 15408(b). The second sentence of subdivision (d) provides a default rule for the disposition of trust property upon termination of a trust worth less than $20,000.

In appropriate circumstances, distributions on termination of a trust may be made to a custodian for a minor under the Uniform Transfers to Minors Act. See Sections 3905 (transfer authorized in trust), 3906 (other transfer by trustee).

Background on Section 15410 of Repealed Code

Section 15410 was a new provision that was added by 1986 Cal. Stat. ch. 820 § 40 and amended by 1987 Cal. Stat. ch. 128 § 10. Subdivision (a) superseded the part of former Civil Code Section 2280 (repealed by 1986 Cal. Stat. ch. 820 § 7) relating to disposition of property upon revocation. Subdivision (c) was drawn in part from subdivision (b) of former Civil Code Section 2279.1 (repealed by 1986 Cal. Stat. ch. 820 § 7) and subdivision (b) of former Probate Code Section 1120.6 (repealed by 1986 Cal. Stat. ch. 820 § 31), which applied to termination of trusts with uneconomically low principal. Subdivision (c) also superseded former Civil Code Section 864 (repealed by 1986 Cal. Stat. ch. 820 § 5) (disposition of real property upon failure or termination of trust). The 1987 amendment revised subdivision (d) to provide a default rule for disposition of trust property at termination of a trust worth less than $20,000. For background on the provisions of this division, see the Comment to this division under the division heading.

§ 15411. Combination of similar trusts

Comment. Section 15411 continues Section 15411 of the repealed Probate Code without change. This section applies to living trusts as well as testamentary trusts. In addition, a living trust and a testamentary trust may be combined under Section 15411. Trusts may be combined pursuant to Section 15411 only upon a petition pursuant to Section 17200(a) and (b)(14). See also Section 15800 (limits on rights of beneficiary of revocable trust).

For general provisions relating to petitions and other papers, see Sections 1020-1023, 17201; see also Sections 1021 (petition to be verified), 1041 (clerk to set petition for hearing). For general provisions relating to notice of hearing, see Sections 1200-1221, 15802-15804, 17100-17105, 17203-17205; see also Sections 1260-1265 (proof of giving notice). For general provisions relating to hearings and orders, see Sections 1040-1050, 17000-17006, 17201-17202, 17206-17207.

Background on Section 15411 of Repealed Code

Section 15411 was added by 1986 Cal. Stat. ch. 820 § 40. The section superseded former Probate Code Section 1133 (repealed by 1986 Cal. Stat. ch. 820 § 31). Unlike former Section 1133, Section 15411 was made applicable to living trusts as well as testamentary trusts. The requirement in former Section 1133 that the trusts be "substantially identical" was changed to "substantially similar." The reference to substantially impairing also was new; former Section 1133 referred only to "impairing" the interests of beneficiaries. The former requirement that the combination be consistent with the intent of the settlor and facilitate administration of the trust was superseded by the requirement that the combination may not defeat or substantially impair accomplishment of trust purposes. For background on the provisions of this division, see the Comment to this division under the division heading.

§ 15412. Division of trusts

Comment. Section 15412 continues Section 15412 of the repealed Probate Code without change. This section provides a standard intended to protect the interests of beneficiaries without necessarily requiring their consent. Division of a trust may be appropriate, for example, in a situation where different members of a family desire their own separate trusts because of a disagreement or where a beneficiary has moved to a different part of the country.

For general provisions relating to petitions and other papers, see Sections 1020-1023, 17201; see also Sections 1021 (petition to be verified), 1041 (clerk to set petition for hearing). For general provisions relating to notice of hearing, see Sections 1200-1221, 15802-15804, 17100-17105, 17203-17205; see also Sections 1260-1265 (proof of giving notice). For general provisions relating to hearings and orders, see Sections 1040-1050, 17000-17006, 17201-17202, 17206-17207. See also Section 15800 (limits on rights of beneficiary of revocable trust).

Background on Section 15412 of Repealed Code

Section 15412 was added by 1986 Cal. Stat. ch. 820 § 40. The section superseded the authority to divide trusts in subdivision (a)(14) of former Probate Code Section 1138.1 (repealed by 1986 Cal. Stat. ch. 820 § 31). The former rule required the consent of all parties in interest, whereas Section 15412 provides a standard intended to protect the interests of beneficiaries without necessarily requiring their consent. For background on the provisions of this division, see the Comment to this division under the division heading.

PART 3. TRUSTEES AND BENEFICIARIES

CHAPTER 1. TRUSTEES

Article 1. General Provisions

§ 15600. Acceptance of trust by trustee

Comment. Section 15600 continues Section 15600 of the repealed Probate Code without change.

Subdivision (a) is drawn from the Indiana Trust Code. See Ind. Code Ann. § 30-4-2-2(a)-(b) (West 1979). The provision in subdivision (a)(2) for acceptance of the trust by acts of the person named as trustee is consistent with prior case law. See, e.g., Heitman v. Cutting, 37 Cal. App. 236, 238, 174 P. 675 (1918).

Subdivision (b) also is drawn from the Indiana Trust Code. See Ind. Code Ann. § 30-4-2-2(d) (West 1979). The last sentence makes clear that the authority to act in an emergency does not impose a duty to act. The intention of this subdivision is to permit the person named as trustee to act in an emergency without being considered to have accepted the trust under the rule set out in subdivision (a)(2). See also Section 15601 (rejection of trust).

The rules governing acceptance of the trust at the commencement of the trust apply by analogy to acceptance of a modification of the trust. Thus, for example, a trustee is not subject to liability for breach of a new duty imposed through a modification of the trust unless the trustee signs the trust as modified or a separate acceptance under subdivision (a)(1) or performs the new duty under subdivision (a)(2).

Background on Section 15600 of Repealed Code

Section 15600 was a new provision added by 1986 Cal. Stat. ch. 820 § 40. Subdivision (a) superseded part of the introductory clause and subdivision (1) of former Civil Code Section 2222 and part of former Civil Code Section 2251 (provisions repealed by 1986 Cal. Stat. ch. 820 § 7). See also former Civil Code § 2258 (repealed by 1986 Cal. Stat. ch. 820 § 7) (trustee of revocable trust to follow directions of settlor acceptable to trustee). For background on the provisions of this division, see the Comment to this division under the division heading.

§ 15601. Rejection of trust; nonliability of person who rejects trust

Comment. Section 15601 continues Section 15601 of the repealed Probate Code without change. Section 15601 is drawn from the Indiana Trust Code. See Ind. Code Ann. § 30-4-2-2(c) (West 1979).

Under this section, a trustee may reject new duties without having to resign as trustee. However, if a modification is rejected, the trustee remains subject to the duties and liabilities under the trust as it existed before the modification. The provision in subdivision (c) that a trustee who rejects the trust is not liable is consistent with Sections 16000 (duty

to administer trust upon acceptance) and 16400 (violation of duty is breach of trust). See also Sections 15660 (appointment of trustee to fill vacancy), 17200(b)(10) (petition to appoint trustee).

The appropriate recipient of the written rejection depends upon the circumstances of the case. Ordinarily, it would be appropriate to give the rejection to the person who informs the person of the proposed trusteeship. If proceedings involving the trust are pending, the rejection could be filed with the court clerk. In the case of a person named as trustee of a revocable living trust, it would be appropriate to give the rejection to the settlor. In any case it would be best to give notice of rejection to a beneficiary with a present interest in the trust since the beneficiary would be motivated to seek appointment of a new trustee.

Background on Section 15601 of Repealed Code

Section 15601 was a new provision added by 1986 Cal. Stat. ch. 820 § 40. The section superseded former Probate Code Section 1124 (repealed by 1986 Cal. Stat. ch. 820 § 31) which provided for rejection of certain testamentary trusts by filing a writing with the court clerk. For background on the provisions of this division, see the Comment to this division under the division heading.

§ 15602. Trustee's bond

Comment. Section 15602 continues Section 15602 of the repealed Probate Code without change.

Subdivisions (a)-(c) are drawn from Section 7-304 of the Uniform Probate Code (1987). As to the construction of provisions drawn from uniform acts, see Section 2. A nonprofit or charitable corporation that acts as trustee under a charitable trust is not a trust company, as defined in Section 83, and thus is subject to the provisions of paragraphs (1) and (2) of subdivision (a) of Section 15602 relating to when a bond is required. A bond is required if the trust instrument requires it (subject to the court's power to excuse the bond) or if the bond is found by the court to be necessary to protect the interests of beneficiaries. But a bond is not required of a nonprofit or charitable corporation that is appointed as trustee under a charitable trust merely because the corporation is not named as a trustee in the trust instrument. For provisions relating to nonprofit or charitable corporations acting as trustees, see, e.g., Corp. Code §§ 5140(k) (power of nonprofit public benefit corporation to act as trustee), 7140(k) (power of nonprofit mutual benefit corporation to act as trustee), 9140(k) (power of nonprofit religious corporation to act as trustee); Gov't Code § 12582.1 ("charitable corporation" defined for purposes of Uniform Supervision of Trustees for Charitable Purposes Act).

Subdivision (e) makes clear that a trust company may not be required to give a bond. See Section 83 ("trust company" defined).

For general provisions relating to petitions and other papers, see Sections 1020-1023, 17201; see also Sections 1021 (petition to be verified), 1041 (clerk to set petition for hearing). For general provisions relating to notice of hearing, see Sections 1200-1221, 15802-15804, 17100-17105, 17203-17205; see also Sections 1260-1265 (proof of giving notice). For general provisions relating to hearings and orders, see Sections 1040-1050, 17000-17006, 17201-17202, 17206-17207.

Background on Section 15602 of Repealed Code

Section 15602 was added by 1986 Cal. Stat. ch. 820 § 40. For background on the provisions of this division, see the Comment to this division under the division heading.

Subdivision (a)(3) restated part of former Probate Code Section 1127 (repealed by 1986 Cal. Stat. ch. 820 § 31) without substantive change, except that subdivision (a)(3) applies only to an individual trustee who is not named or nominated as an original or successor trustee in the trust instrument. See also Sections 15643 (vacancy in office of trustee), 15660 (appointment of trustee to fill vacancy). In other respects, Section 15602 superseded former Probate Code Section 1127 (bond of trustee named by court) and former Probate Code Section 1127.5 (exception for substitute or successor trustee that is charitable corporation) (provisions repealed by 1986 Cal. Stat. ch. 820 § 31). Subdivision (d) superseded the second sentence of former Probate Code Section 1127 (repealed by 1986 Cal. Stat. ch. 820 § 31).

Subdivision (e) restated part of former Probate Code Sections 480 and 481 (provisions repealed by 1988 Cal. Stat. ch. 1199 § 47) without substantive change.

§ 15603. Certificate of trustee

Comment. Section 15603 continues Section 15603 of the repealed Probate Code without change.

Background on Section 15603 of Repealed Code

Section 15603 was added by 1986 Cal. Stat. ch. 820 § 40. The section restated former Probate Code Section 1130.1 (repealed by 1986 Cal. Stat. ch. 820 § 31) without substantive change and expanded the former provision to cover living trusts. For background on the provisions of this division, see the Comment to this division under the division heading.

Article 2. Cotrustees

§ 15620. Actions by cotrustees

Comment. Section 15620 continues Section 15620 of the repealed Probate Code without change. See also Section 16402 (trustee's liability to beneficiary for acts of cotrustee).

Background on Section 15620 of Repealed Code

Section 15620 was added by 1986 Cal. Stat. ch. 820 § 40. The section restated former Civil Code Section 2268 (repealed by 1986 Cal. Stat. ch. 820 § 7) without substantive change and superseded the first part of former Civil Code Section 860 (repealed by 1986 Cal. Stat. ch. 820 § 5). Section 15620 also superseded the part of former Civil Code Section 2240 (repealed by 1986 Cal. Stat. ch. 820 § 7) relating to consent by cotrustees as to deposit of securities in a securities depository. For background on the provisions of this division, see the Comment to this division under the division heading.

§ 15621. Vacancy in office of cotrustee

Comment. Section 15621 continues Section 15621 of the repealed Probate Code without change. Under this section, a vacancy in the office of a cotrustee is disregarded in the operation of the trust so long as there is at least one trustee remaining. If the trust provides for majority rule, the remaining trustees act by majority vote of their number, even though the number of trustees constituting a majority is now less than before the vacancy occurred. In effect, the vacant positions are not counted in determining a quorum or in determining the number constituting a majority. This rule is subject to contrary provision in the trust instrument, as noted in the introductory clause. See also Sections 15643 (vacancy in office of trustee), 15660 (appointment of trustee to fill vacancy).

Background on Section 15621 of Repealed Code

Section 15621 was added by 1986 Cal. Stat. ch. 820 § 40. The section superseded the second part of former Civil Code Section 860 (repealed by 1986 Cal. Stat. ch. 820 § 5) and former Civil Code Section 2288 (repealed by 1986 Cal. Stat. ch. 820 § 7). For background on the provisions of this division, see the Comment to this division under the division heading.

§ 15622. Temporary incapacity of cotrustee

Comment. Section 15622 continues Section 15622 of the repealed Probate Code with a technical, clarifying change. This section deals with the problem that may arise where a cotrustee is temporarily unable to fulfill its duties but the office of trustee is not vacant as under Section 15621. See also Section 17200(b)(2) (court determination of existence or nonexistence of power, duty, or right), (b)(6) (court instructions to trustee).

Background on Section 15622 of Repealed Code

Section 15622 is a new provision added by 1986 Cal. Stat. ch. 820 § 40. For background on the provisions of this division, see the Comment to this division under the division heading.

Article 3. Resignation and Removal of Trustees

§ 15640. Resignation of trustee

Comment. Section 15640 continues Section 15640 of the repealed Probate Code without change.

Subdivisions (a), (c), and (d) are similar to Section 106 of the Restatement (Second) of Trusts (1957), except that the class of persons whose consent is needed under subdivision (c) is more restricted. For a provision governing acceptance of the trust, see Section 15600. For provisions relating to consent by beneficiaries who lack capacity, see, e.g., Civil Code §§ 2450, 2467 (statutory form of durable power of attorney); Prob. Code §§ 1003 (guardian ad litem), 2580 (conservator).

Whether court approval is required under subdivision (a) depends on the terms of the trust. Subdivision (b) recognizes that the person holding the power to revoke a revocable trust has control over the trust rather than the beneficiaries. See Section 15800. Under subdivision (d), the court has authority to accept a resignation regardless of whether the trust provides a manner of resignation.

For general provisions relating to petitions and other papers, see Sections 1020-1023, 17201; see also Sections 1021 (petition to be verified), 1041 (clerk to set petition for hearing). For general provisions relating to notice of hearing, see Sections 1200-1221, 15802-15804, 17100-17105, 17203-17205; see also Sections 1260-1265 (proof of giving notice). For general provisions relating to hearings and orders, see Sections 1040-1050, 17000-17006, 17201-17202, 17206-17207. See also Section 17200(b)(11) (petition to accept resignation of trustee).

Background on Section 15640 of Repealed Code

Section 15640 was added by 1986 Cal. Stat. ch. 820 § 40 and was amended by 1990 Cal. Stat. [AB 831]. Subdivision (a)(1) continued part of the second sentence of former Probate Code Section 1138.8 (repealed by 1986 Cal. Stat. ch. 820 § 31) without substantive change. Subdivision (a)(3) superseded former Civil Code Section 2282(d) (repealed by 1986 Cal. Stat. ch. 820 § 7) which permitted discharge from the trust with the consent of "the beneficiary, if the beneficiary has capacity to contract."

Subdivision (a)(4) restated authority of the court under prior law. See former Civil Code §§ 2282(e), 2283 (provisions repealed by 1986 Cal. Stat. ch. 820 § 7); former Prob. Code §§ 1125.1, 1138.1(a)(9), 1138.8 (provisions repealed by 1986 Cal. Stat. ch. 820 § 31). Under subdivision (a)(4), the court had authority to accept a resignation regardless of whether the trust provides a manner of resignation. Former Probate Code Section 1138.8 permitted the court to act where the trust was silent.

The provision in subdivision (b) that the trustee's resignation shall be accepted by the court restated part of the fifth sentence of former Probate Code Section 1125.1 and part of the third sentence of former Probate Code Section 1138.8 (provisions repealed by 1986 Cal. Stat. ch. 820 § 31). The authority in subdivision (b) for protective orders restated part of the last sentence of the first paragraph of former Probate Code Section 1125.1 and part of the third sentence of former Probate Code Section 1138.8 (provisions repealed by 1986 Cal. Stat. ch. 820 § 31). See also Section 17206 (general authority to make necessary orders).

The 1990 amendment made the following revisions:

(1) The section was revised to make clear that court approval is not required to accomplish a revision except under subdivision (d). This revision made explicit what was implicit under former law.

(2) The last two sentences were added to subdivision (c) for consistency with Section 15660(c) (appointment of trustee to fill vacancy) and to make clear that a conservator may consent to the resignation without the need to obtain approval of the court in which the conservatorship is pending.

For background on the 1990 amendment, see *Recommendation Relating to Trustees' Fees*, 20 Cal. L. Revision Comm'n Reports 185 (1990).

For background on the provisions of this division, see the Comment to this division under the division heading.

§ 15641. Liability of resigning trustee

Comment. Section 15641 continues Section 15641 of the repealed Probate Code without change. See also Sections 16460 (limitations on proceedings against trustee), 16461 (exculpation of trustee).

Background on Section 15641 of Repealed Code

Section 15641 was added by 1986 Cal. Stat. ch. 820 § 40. The section restated the second paragraph of former Probate Code Section 1125.1 and the first part of the last sentence of former Probate Code Section 1138.8 without substantive change (provisions repealed by 1986 Cal. Stat. ch. 820 § 31). Section 15641 also superseded the provisions of former Civil Code Section 2282 (repealed by 1986 Cal. Stat. ch. 820 § 7) relating to discharge of trustees from liability. For background on the provisions of this division, see the Comment to this division under the division heading.

§ 15642. Removal of trustee

Comment. Section 15642 continues Section 15642 of the repealed Probate Code without change. Subdivision (a) is the same in substance as Section 107 of the Restatement (Second) of Trusts (1957) except that it gives the settlor of an irrevocable living trust the right to petition for removal of a trustee. As to the rights of a settlor of a revocable trust, see Sections 15401 (revocation by settlor), 15402 (modification by settlor of revocable trust), 15800 (rights of person holding power of revocation). The right to petition for removal of a trustee does not give the settlor any other rights, such as the right to an account or to receive information concerning administration of the trust.

The statement of grounds for removal of the trustee by the court is drawn from the Texas Trust Code and the Restatement. See Tex. Prop. Code Ann. § 113.082(a) (Vernon 1984); Restatement (Second) of Trusts § 107 comments b-d (1957). As to the authority to remove as provided in the trust instrument, see Restatement (Second) of Trusts § 107 comment h (1957). If a trustee is removed, another trustee may be appointed to fill the vacancy as provided in Section 15660. See also Section 17206 (general authority to make necessary orders).

For general provisions relating to petitions and other papers, see Sections 1020-1023, 17201; see also Sections 1021 (petition to be verified), 1041 (clerk to set petition for hearing). For general provisions relating to notice of hearing, see Sections 1200-1221, 15802-15804, 17100-17105, 17203-17205; see also Sections 1260-1265 (proof of giving notice). For general provisions relating to hearings and orders, see Sections 1040-1050, 17000-17006, 17201-17202, 17206-17207. See also Section 17200(b)(10) (petition to remove trustee).

Background on Section 15642 of Repealed Code

Section 15642 was added by 1986 Cal. Stat. ch. 820 § 40 and was amended by 1990 Cal. Stat. [AB 831]. The authority of the court under Section 15642 to remove trustees continued authority found in former law. See former Civil Code §§ 2233, 2283

(provisions repealed by 1986 Cal. Stat. ch. 820 § 7); former Prob. Code §§ 1123.5, 1138.1(a)(10) (Probate Code provisions repealed by 1986 Cal. Stat. ch. 820 § 31). The authority for removal on the court's own motion is drawn from the third sentence of former Probate Code Section 1123.5 (repealed by 1986 Cal. Stat. ch. 820 § 31). Paragraphs (1) and (2) of subdivision (b) of Section 15642 superseded parts of former Civil Code Sections 2233 and 2283 and part of the first sentence of former Probate Code Section 1123.5 (repealed by 1986 Cal. Stat. ch. 820 § 31). The general language relating to a trustee being otherwise unfit to administer the trust subsumed the reference in former Probate Code Section 1126 (repealed by 1986 Cal. Stat. ch. 820 § 31) to a trustee who is incapable of acting. Paragraph (3) of subdivision (b) continued part of the second sentence of former Probate Code Section 1123.5 (repealed by 1986 Cal. Stat. ch. 820 § 31) without substantive change, except that the reference to "ill feeling" was omitted as redundant with "hostility," and the word "continued" was omitted since the test is whether the administration of the trust is impaired. Paragraph (4) of subdivision (b) continued part of the first sentence of former Probate Code Section 1126 and part of the first sentence of former Probate Code Section 1138.9 (provisions repealed by 1986 Cal. Stat. ch. 820 § 31) without substantive change. Paragraph (5) of subdivision (b) continued authority found in former Probate Code Sections 1126 and 1138.9 (provisions repealed by 1986 Cal. Stat. ch. 820 § 31). Subdivision (c) continued former Probate Code Section 1138.2 (repealed by 1986 Cal. Stat. ch. 820 § 31) without substantive change and restated former Probate Code Section 1123.6 (repealed by 1986 Cal. Stat. ch. 820 § 31) without substantive change.

The 1990 amendment revised subdivision (a) to give the settlor of an irrevocable living trust the right to petition for removal of a trustee and to add a new paragraph (5) to subdivision (b)—and to redesignate former paragraph (5) to be paragraph (6)—to make clear that a trustee may be removed in the court's discretion where the trustee's compensation is excessive under the circumstances. The addition of paragraph (5) was a clarification of the law, rather than a new principle. For background on the 1990 amendment, see *Recommendation Relating to Trustees' Fees*, 20 Cal. L. Revision Comm'n Reports 185 (1990).

For background on the provisions of this division, see the Comment to this division under the division heading.

§ 15643. Vacancy in office of trustee

Comment. Section 15643 continues Section 15643 of the repealed Probate Code without change. For rules concerning filling a vacancy, see Section 15660. See also Sections 83 ("trust company" defined), 15601 (rejection of trust), 15640 (resignation of trustee), 15641 (liability of resigning trustee), 15642 (removal of trustee), 16460 (limitations on proceedings against trustee), 17200(b)(5) (petition to settle trustee's account), 18102 (protection of third person dealing with former trustee).

Background on Section 15643 of Repealed Code

Section 15643 was added by 1986 Cal. Stat. ch. 820 § 40. The section restated the first paragraph, including subdivisions (1) and (2), of former Civil Code Section 2281 (repealed by 1986 Cal. Stat. ch. 820 § 7) without substantive change, except that the reference in former law to discharge of the trustee was omitted as unnecessary. Section 15643 also restated part of the first sentence of former Probate Code Section 1126 (repealed by 1986 Cal. Stat. ch. 820 § 31) without substantive change and restated part of the first sentence of former Probate Code Section 1138.9 (repealed by

1986 Cal. Stat. ch. 820 § 31) without substantive change. Section 15643 also superseded part of former Civil Code Section 860 (repealed by 1986 Cal. Stat. ch. 820 § 5) to the extent it related to the occurrence of a vacancy in the office of a trustee. For background on the provisions of this division, see the Comment to this division under the division heading.

§ 15644. Delivery of property by former trustee upon occurrence of vacancy

Comment. Section 15644 continues Section 15644 of the repealed Probate Code without change. See Section 15643 (vacancy in office of trustee); see also Sections 16420(a)(4) (appointment of receiver or temporary trustee upon breach of trust), 17206 (authority to make necessary orders and appoint temporary trustee).

The second sentence of Section 15644 makes clear that a trustee who has resigned or is removed has the powers needed to complete the trustee's remaining duties. The trustee who has resigned remains liable for actions or omissions during his or her term as trustee even after the property is delivered to the successor until liability is barred. See Section 16460 (limitations on proceedings against trustee).

Background on Section 15644 of Repealed Code

Section 15644 was added by 1986 Cal. Stat. ch. 820 § 40. The first sentence of the section restated part of the fifth sentence of former Probate Code Section 1125.1 and part of the last sentence of former Probate Code Section 1138.8 (provisions repealed by 1986 Cal. Stat. ch. 820 § 31) without substantive change. For background on the provisions of this division, see the Comment to this division under the division heading.

§ 15645. Costs and attorney's fees in proceedings for transfer of trust to successor trust company

Comment. Section 15645 continues Section 15645 of the repealed Probate Code without change. The section is intended to encourage an out of court solution where the beneficiaries of a trust want to transfer administration of the trust to a successor corporate trustee. For provisions concerning consent to transfer of the trust to a successor trust company, see Sections 15640 (resignation of trustee) and 15660 (appointment to fill vacancy in office of trustee).

Background on Section 15645 of Repealed Code

Section 15645 was added by 1990 Cal. Stat. [AB 831]. For background on the section, see *Recommendation Relating to Trustees' Fees*, 20 Cal. L. Revision Comm'n Reports 185 (1990). For background on the provisions of this division, see the Comment to this division under the division heading.

Article 4. Appointment of Trustees

§ 15660. Appointment of trustee to fill vacancy

Comment. Section 15660 continues Section 15660 of the repealed Probate Code without change. For a provision governing the occurrence of vacancies in the office of trustee, see Section 15643.

Subdivision (a) makes clear that the vacancy in the office of a cotrustee must be filled only if the trust so requires. If the vacancy in the office of cotrustee is not filled, the remaining cotrustees may continue to administer the trust under Section 15621, unless the trust instrument provides otherwise.

The persons who must agree to the new trustee under subdivision (c) are the same as those who must consent to a resignation under subdivision (c) of Section 15640. A vacancy may be filled under subdivision (c) whether or not the former trustee was a trust company. If the trustee resigns pursuant to subdivision (c) of Section 15640, the trust may be transferred to a trust company pursuant to subdivision (c) of Section 15660, all without court approval.

Subdivision (d) gives the court discretion to fill a vacancy in a case where the trust does not name a successor who is willing to accept the trust, where the trust does not provide a practical method of appointment, or where the trust does not require the vacancy to be filled. For a limitation on the rights of certain beneficiaries of revocable trusts, see Section 15800.

The provision in subdivision (d) requiring the court to give consideration to the wishes of the beneficiaries is consistent with the Restatement rule. See Restatement (Second) of Trusts § 108 comments d, i (1957).

For general provisions relating to petitions and other papers, see Sections 1020-1023, 17201; see also Sections 1021 (petition to be verified), 1041 (clerk to set petition for hearing). For general provisions relating to notice of hearing, see Sections 1200-1221, 15802-15804, 17100-17105, 17203-17205; see also Sections 1260-1265 (proof of giving notice). For general provisions relating to hearings and orders, see Sections 1040-1050, 17000-17006, 17201-17202, 17206-17207. See also Section 17200(b)(10) (petition to appoint trustee).

Background on Section 15660 of Repealed Code

Section 15660 was added by 1986 Cal. Stat. ch. 820 § 40, and was amended by 1990 Cal. Stat. [AB 831] to renumber subdivision (c) as (d) and to add a new subdivision (c).

Section 15660 superseded the following provisions:

(1) Former Civil Code Sections 2287 and 2289 (provisions repealed by 1986 Cal. Stat. ch. 820 § 7).

(2) Former Probate Code Sections 1125, 1126, and 1138.9 (provisions repealed by 1986 Cal. Stat. ch. 820 § 31).

The provision in subdivision (b) of Section 15660 relating to a "practical" method of appointing a trustee continued language found in former Civil Code Section 2287 and superseded part of former Probate Code Section 1138.9 (repealed by 1986 Cal. Stat. ch. 820 § 31).

Subdivision (c) was added to permit a vacancy in the office of trustee to be filled, without the need for court approval, by a trust company selected by agreement of the adult beneficiaries of the trust. For background on subdivision (c), see *Recommendation Relating to Trustees' Fees*, 20 Cal. L. Revision Comm'n Reports 185 (1990).

The authority of the court to appoint the same or a lesser number of trustees in subdivision (d) of Section 15660 continued the second sentence of former Civil Code Section 2289 without substantive change. The provision in subdivision (d) requiring the court to give consideration to the wishes of the beneficiaries superseded the second sentence of former Civil Code Section 2287.

For background on the provisions of this division, see the Comment to this division under the division heading.

Article 5. Compensation and Indemnification of Trustees

§ 15680. Trustee's compensation as provided in trust instrument; different compensation

Comment. Section 15680 continues Section 15680 of the repealed Probate Code without change. See also Sections 15682 (court determination of prospective compensation), 17200(b)(9) (petition to fix compensation). Subdivision (c) makes clear that an order changing the amount of compensation cannot be applied retroactively to actions already taken.

For general provisions relating to petitions and other papers, see Sections 1020-1023, 17201; see also Sections 1021 (petition to be verified), 1041 (clerk to set petition for hearing). For general provisions relating to notice of hearing, see Sections 1200-1221, 15802-15804, 17100-17105, 17203-17205; see also Sections 1260-1265 (proof of giving notice). For general provisions relating to hearings and orders, see Sections 1040-1050, 17000-17006, 17201-17202, 17206-17207.

Background on Section 15680 of Repealed Code

Section 15680 was added by 1986 Cal. Stat. ch. 820 § 40. Subdivision (a) continued the first sentence of former Civil Code Section 2274 (repealed by 1986 Cal. Stat. ch. 820 § 7) without substantive change and restated the first sentence of former Probate Code Section 1122 (repealed by 1986 Cal. Stat. ch. 820 § 31) without substantive change. Subdivision (b) restated the second sentence of former Civil Code Section 2274 and the second sentence of former Probate Code Section 1122 (repealed by 1986 Cal. Stat. ch. 820 § 31) without substantive change, except that subdivision (b) made clear that the court could reduce the trustee's compensation when appropriate. For background on the provisions of this division, see the Comment to this division under the division heading.

§ 15681. Trustee's compensation where trust silent

Comment. Section 15681 continues Section 15681 of the repealed Probate Code without change. The trustee has authority to fix and pay its compensation without the necessity of prior court review. See Section 16243 (power to pay compensation and other expenses). See also Sections 15682 (court determination of prospective compensation), 17200(b)(9) (petition to fix compensation).

Background on Section 15681 of Repealed Code

Section 15681 was added by 1986 Cal. Stat. ch. 820 § 40. The section continued the third sentence of former Civil Code Section 2274 (repealed by 1986 Cal. Stat. ch. 820 § 7) without substantive change and restated part of the third sentence of former Probate Code Section 1122 (repealed by 1986 Cal. Stat. ch. 820 § 31) without substantive change. For background on the provisions of this division, see the Comment to this division under the division heading.

§ 15682. Court determination of prospective compensation

Comment. Section 15682 continues Section 15682 of the repealed Probate Code without change. This section makes clear that the court may fix compensation prospectively. See also Section 17200(b)(9) (petition to fix compensation).

Background on Section 15682 of Repealed Code

Section 15682 was added by 1986 Cal. Stat. ch. 820 § 40. The section superseded the last part of the third sentence of former Probate Code Section 1122 (repealed by 1986 Cal. Stat. ch. 820 § 31). For background on the provisions of this division, see the Comment to this division under the division heading.

§ 15683. Compensation of cotrustees

Comment. Section 15683 continues Section 15683 of the repealed Probate Code without change. See also Section 17200(b)(9) (petition to fix compensation).

Background on Section 15683 of Repealed Code

Section 15683 was added by 1986 Cal. Stat. ch. 820 § 40. The section restated the fourth sentence of former Civil Code Section 2274 (repealed by 1986 Cal. Stat. ch. 820 § 7) and the fourth sentence of former Probate Code Section 1122 (repealed by 1986 Cal. Stat. ch. 820 § 31) without substantive change. For background on the provisions of this division, see the Comment to this division under the division heading.

§ 15684. Repayment of trustee for expenditures

Comment. Section 15684 continues Section 15684 of the repealed Probate Code without change. Under this section, a trustee is not entitled to attorney's fees and expenses of a proceeding where it is determined that the trustee breached the trust, unless the court otherwise orders as provided in subdivision (b). See, e.g., Estate of Gilmaker, 226 Cal. App. 2d 658, 663-65, 38 Cal. Rptr. 270 (1964); Estate of Vokal, 121 Cal. App. 2d 252, 258-61, 263 P.2d 64 (1953).

Background on Section 15684 of Repealed Code

Section 15684 was added by 1986 Cal. Stat. ch. 820 § 40. The section restated former Civil Code Section 2273 (repealed by 1986 Cal. Stat. ch. 820 § 7) without substantive change and superseded the part of the last sentence of former Probate Code Section 1122 (repealed by 1986 Cal. Stat. ch. 820 § 31) relating to proper expenses and the provisions relating to advancing the trustee's personal funds in subdivision (14) of former Probate Code Section 1120.2 (repealed by 1986 Cal. Stat. ch. 820 § 31). For background on the provisions of this division, see the Comment to this division under the division heading.

§ 15685. Trustee's lien

Comment. Section 15685 continues Section 15685 of the repealed Probate Code without change. This section is the same in substance as part of Section 3(c)(18) of the Uniform Trustees' Powers Act (1964); however, the reference to the equitable nature of the lien is new. As to the construction of provisions drawn from uniform acts, see Section 2. An equitable lien is not good against a transferee of trust property who gives fair consideration for the property without knowledge of the lien. See generally 1 J. Pomeroy, Equity Jurisprudence §§ 165, 171(4) (5th ed. 1941); see also Restatement (Second) of Trusts § 244 comment c (1957). The reference in Section 15685 to liabilities because of ownership or control of trust property involves liability for taxes and assessments on trust property and tort liability arising out of trust property. See also Section 18001 (personal liability of trustee arising out of ownership or control of trust property).

Background on Section 15685 of Repealed Code

Section 15685 was added by 1986 Cal. Stat. ch. 820 § 40. The section restated part of subdivision (14) of former Probate Code Section 1120.2 (repealed by 1986 Cal. Stat. ch. 820 § 31) without substantive change. For background on the provisions of this division, see the Comment to this division under the division heading.

§ 15686. Notice of increased trustee's fee

Comment. Section 15686 continues Section 15686 of the repealed Probate Code without change. See also Section 16060 (duty of the trustee to keep beneficiaries of trust reasonably informed of the trust and its administration).

Background on Section 15686 of Repealed Code

Section 15686 was added by 1990 Cal. Stat. [AB 831]. For background on the section, see *Recommendation Relating to Trustees' Fees*, 20 Cal. L. Revision Comm'n Reports 185 (1990).

CHAPTER 2. BENEFICIARIES

§ 15800. Limits on rights of beneficiary of revocable trust

Comment. Section 15800 continues Section 15800 of the repealed Probate Code without change. This section has the effect of postponing the enjoyment of rights of beneficiaries of revocable trusts until the death

or incompetence of the settlor or other person holding the power to revoke the trust. See also Section 15803 (holder of general power of appointment or power to withdraw property from trust treated as settlor). Section 15800 thus recognizes that the holder of a power of revocation is in control of the trust and should have the right to enforce the trust. See Section 17200 et seq. (judicial proceedings concerning trusts). A corollary principle is that the holder of the power of revocation may direct the actions of the trustee. See Section 16001 (duties of trustee of revocable trust); see also Sections 15401 (method of revocation by settlor), 15402 (power to revoke includes power to modify). Under this section, the duty to inform and account to beneficiaries is owed to the person holding the power to revoke during the time that the trust is presently revocable. See Section 16060 et seq. (trustee's duty to inform and account to beneficiaries). The introductory clause recognizes that the trust instrument may provide rights to beneficiaries of revocable trusts which must be honored until such time as the trust is modified to alter those rights. See Sections 16001 (duties of trustee of revocable trust), 16080-16081 (duties with regard to discretionary trusts). The introductory clause also makes clear that this section does not eliminate the rights of beneficiaries of revocable trusts in situations where the joint action of the settlor and all beneficiaries is required. See Sections 15404 (modification or termination by settlor and all beneficiaries), 15410(b) (disposition of property on termination of trust with consent of settlor and all beneficiaries).

Background on Section 15800 of Repealed Code

Section 15800 was a new provision added by 1986 Cal. Stat. ch. 820 § 40. For background on the provisions of this division, see the Comment to this division under the division heading.

§ 15801. Consent by beneficiary of revocable trust

Comment. Section 15801 continues Section 15801 of the repealed Probate Code without change.

Subdivision (a) recognizes the principle that the consent of a beneficiary of a revocable trust should not have any effect during the time that the trust is presently revocable, since the power over the trust is held by the settlor or other person holding the power to revoke. See the Comment to Section 15800. See also Section 15803 (holder of general power of appointment or power to withdraw property from trust treated as settlor). Under the rule provided in Section 15801, the consent of the person holding the power to revoke, rather than the beneficiaries, excuses the trustee from liability as provided in Section 16460(a) (limitations on proceedings against trustee). For provisions permitting a trustee to be

relieved of liability by the beneficiaries, see Sections 16463 (consent), 16464 (release), 16465 (affirmance).

Subdivision (b) makes clear that this section does not eliminate the requirement of obtaining the consent of beneficiaries in cases where the consent of the settlor and all beneficiaries is required. See Section 15404 (modification or termination by settlor and all beneficiaries).

Background on Section 15801 of Repealed Code

Section 15801 was a new provision added by 1986 Cal. Stat. ch. 820 § 40. For background on the provisions of this division, see the Comment to this division under the division heading.

§ 15802. Notice to beneficiary of revocable trust

Comment. Section 15802 continues Section 15802 of the repealed Probate Code without change. This section recognizes that notice to the beneficiary of a revocable trust would be an idle act in the case of a revocable trust since the beneficiary is powerless to act. See Section 15800 (limits on rights of beneficiary of revocable trust). See also Section 15803 (holder of general power of appointment or power to withdraw property from trust treated as settlor). For notice provisions, see Sections 17100-17105, 17203, 17403, 17454.

Background on Section 15802 of Repealed Code

Section 15802 was a new provision added by 1986 Cal. Stat. ch. 820 § 40. For background on the provisions of this division, see the Comment to this division under the division heading.

§ 15803. Rights of holder of power of appointment or withdrawal

Comment. Section 15803 continues Section 15803 of the repealed Probate Code without change. This section makes clear that a holder of a power of appointment or a power of withdrawal is treated as a person holding the power to revoke the trust for purposes of Sections 15800-15802 in recognition of the fact that the holder of such power is in an equivalent position to control the trust as it relates to the property covered by the power.

Background on Section 15803 of Repealed Code

Section 15803 was a new provision added by 1986 Cal. Stat. ch. 820 § 40 and amended by 1987 Cal. Stat. ch. 128 § 11. For background on the provisions of this division, see the Comment to this division under the division heading.

§ 15804. Notice in case involving future interest of beneficiary

Comment. Section 15804 continues Section 15804 of the repealed Probate Code without change. For provisions where this section applies, see Sections 17203 (notice of hearing on petitions generally), 17351 (provisions for removal of certain testamentary trusts from continuing jurisdiction), 17403 (notice of petition for transfer to another jurisdiction), 17454 (notice of petition for transfer to California). See

Section 17204 (request for special notice). See also Section 24 ("beneficiary" defined).

Background on Section 15804 of Repealed Code

Section 15804 was added by 1986 Cal. Stat. ch. 820 § 40 and was amended by 1988 Cal. Stat. ch. 1199 § 105.3. Subdivision (a) restated former Probate Code Section 1215.1 (repealed by 1986 Cal. Stat. ch. 820 § 35) without substantive change. Subdivision (b) restated former Probate Code Section 1215.2 (repealed by 1986 Cal. Stat. ch. 820 § 35) without substantive change. Subdivision (c) restated the first sentence of former Probate Code Section 1215.4 (repealed by 1986 Cal. Stat. ch. 820 § 35) without substantive change. The 1988 amendment corrected a cross-reference. For background on the provisions of this division, see the Comment to this division under the division heading.

§ 15805. Attorney General subject to limitations on rights of beneficiaries of revocable trusts

Comment. Section 15805 continues Section 15805 of the repealed Probate Code without change. This section makes clear that the Attorney General is treated the same as a beneficiary of a revocable living trust for purposes of the provisions limiting such beneficiaries' rights. This section is consistent with Section 24 which defines beneficiary to include any person entitled to enforce a charitable trust, taking into account the provision of Section 15800 that beneficiaries of revocable trusts do not have the rights normally afforded beneficiaries so long as the charitable trust is revocable and the person holding the power to revoke remains competent. This section recognizes that the Attorney General's rights to receive notice under Section 17203(c) and to petition under Section 17210 are limited just as in the case of individual beneficiaries.

Background on Section 15805 of Repealed Code

Section 15805 was a new provision added by 1987 Cal. Stat. ch. 128 § 12. For background on the provisions of this division, see the Comment to this division under the division heading.

PART 4. TRUST ADMINISTRATION

CHAPTER 1. DUTIES OF TRUSTEES

Article 1. Trustee's Duties in General

§ 16000. Duty to administer trust

Comment. Section 16000 continues Section 16000 of the repealed Probate Code without change. This section is drawn in part from Sections 164 and 169 of the Restatement (Second) of Trusts (1957). See also Sections 15600 (acceptance of trust by trustee), 15800 (duties owed to person holding power to revoke), 15803 (duties owed to person with general power of appointment or power to withdraw trust property), 16001 (duties of trustee of revocable trust), 16040 (trustee's standard of

care in performing duties). For provisions permitting the beneficiaries to relieve the trustee from liability, see Sections 16463 (consent), 16464 (release), 16465 (affirmance).

Background on Section 16000 of Repealed Code

Section 16000 was added by 1986 Cal. Stat. ch. 820 § 40. The section restated the part of former Civil Code Section 2258 (repealed by 1986 Cal. Stat. ch. 820 § 7) requiring the trustee to "fulfill the purpose of the trust" and also superseded former Civil Code Section 2253 (repealed by 1986 Cal. Stat. ch. 820 § 7) insofar as it related to control of the trustee's duties by the trust instrument. For background on the provisions of this division, see the Comment to this division under the division heading.

§ 16001. Duties of trustee of revocable trust

Comment. Section 16001 continues Section 16001 of the repealed Probate Code without change.

The qualification in subdivision (a) that a direction be acceptable to the trustee does not mean that the trustee is required to determine the propriety of the direction. For the rule protecting the trustee from liability for following directions under this section, see Section 16462. See also Sections 15800 (duties owed to person holding power to revoke), 16000 (duties subject to control in trust instrument), 16040 (standard of care in performing duties).

Subdivision (b) clarifies the relationship between the duty to follow directions provided in subdivision (a) and the rules governing modification of trusts. See Sections 15401 (method of revocation by settlor), 15402 (power to revoke includes power to modify).

Background on Section 16001 of Repealed Code

Section 16001 was added by 1986 Cal. Stat. ch. 820 § 40. Subdivision (a) continued the first sentence of former Civil Code Section 2258(b) (repealed by 1986 Cal. Stat. ch. 820 § 7) without substantive change. Subdivision (b) was a new provision. For background on the provisions of this division, see the Comment to this division under the division heading.

§ 16002. Duty of loyalty

Comment. Section 16002 continues Section 16002 of the repealed Probate Code without change.

Subdivision (a) codifies the substance of Section 170(1) of the Restatement (Second) of Trusts (1957). See also Sections 16000 (duties subject to control by trust instrument), 16040 (trustee's standard of care in performing duties). This article does not attempt to state all aspects of the trustee's duty of loyalty, nor does this article seek to cover all duties that may exist. See Section 15002 (common law as law of state). See also Section 16015 (certain actions not violations of duties). For provisions permitting the beneficiaries to relieve the trustee from

liability, see Sections 16463 (consent), 16464 (release), 16465 (affirmance).

Subdivision (b) is drawn from Indiana law. See Ind. Code Ann. § 30-4-3-7(d) (West Supp. 1988). This subdivision permits sales or exchanges between two or more trusts that have the same trustee without running afoul of the duty of loyalty. See Restatement (Second) of Trusts § 170 comment r (1957). Subdivision (b) does not require the trustee to give notice to all beneficiaries of both trusts; for limitations on the need to give notice, see Sections 15802 (notice to beneficiary of revocable trust) and 15804 (notice in case involving future interest of beneficiary). See also Sections 15800 (limits on rights of beneficiary of revocable trust), 15801 (consent of beneficiary of revocable trust).

Background on Section 16002 of Repealed Code

Section 16002 was added by 1986 Cal. Stat. ch. 820 § 40. The section restated the general duty of loyalty expressed in former Civil Code Sections 2228 (trustee to act in "highest good faith"), 2229 (not to use property for trustee's profit), 2231 (influence not to be used for trustee's advantage), 2232 (trustee not to undertake adverse trust), 2233 (trustee to disclose adverse interest), 2235 (transactions between trustee and beneficiary presumed under undue influence), and 2263 (trustee cannot enforce claim against trust purchased after becoming trustee) (provisions repealed by 1986 Cal. Stat. ch. 820 § 7). Subdivision (b) was a new provision. For background on the provisions of this division, see the Comment to this division under the division heading.

§ 16003. Duty to deal impartially with beneficiaries

Comment. Section 16003 continues Section 16003 of the repealed Probate Code without change. This section codifies the substance of Section 183 of the Restatement (Second) of Trusts (1957). This section is in accord with prior case law. See Estate of Miller, 107 Cal. App. 438, 290 P. 528 (1930). For provisions permitting the beneficiaries to relieve the trustee from liability, see Sections 16463 (consent), 16464 (release), 16465 (affirmance). See also Sections 16000 (duties subject to control by trust instrument), 16040 (trustee's standard of care in performing duties).

Background on Section 16003 of Repealed Code

Section 16003 was a new provision added by 1986 Cal. Stat. ch. 820 § 40. For background on the provisions of this division, see the Comment to this division under the division heading.

§ 16004. Duty to avoid conflict of interest

Comment. Section 16004 continues Section 16004 of the repealed Probate Code without change. For provisions permitting the beneficiaries to relieve the trustee from liability, see Sections 16463 (consent), 16464 (release), 16465 (affirmance). See also Sections 16000 (duties subject to control by trust instrument), 16040 (trustee's standard

of care in performing duties), 16015 (certain actions not violations of duties).

The court referred to in subdivision (b) may be the court where the trust is administered, such as where the trustee seeks reimbursement for the claim under Section 17200(b), or the court where enforcement of the claim is sought, such as where the trustee seeks to foreclose a lien or seeks recognition of the claim in proceedings commenced by some other creditor.

Background on Section 16004 of Repealed Code

Section 16004 was added by 1986 Cal. Stat. ch. 820 § 40. Subdivision (a) restated former Civil Code Section 2229 and part of the introductory provision of former Civil Code Section 2230 (provisions repealed by 1986 Cal. Stat. ch. 820 § 7) without substantive change. Subdivision (b) restated former Civil Code Section 2263 (repealed by 1986 Cal. Stat. ch. 820 § 7) without substantive change. The first sentence of subdivision (c) restated the presumption of former Civil Code Section 2235 (repealed by 1986 Cal. Stat. ch. 820 § 7), but the presumption in Section 16004 was phrased in terms of a violation of the trustee's fiduciary duties, rather than a presumption of insufficient consideration and undue influence. The second sentence relating to the nature of the presumption was consistent with prior case law. See, e.g., McDonald v. Hewlett, 102 Cal. App. 2d 680, 687-88, 228 P.2d 83 (1951); see also Evid. Code §§ 605 (presumption affecting burden of proof defined), 606 (effect of presumption affecting burden of proof). The exception to the burden of proof provided in the last sentence of subdivision (c) restated the second sentence of former Civil Code Section 2235 without substantive change. For background on the provisions of this division, see the Comment to this division under the division heading.

§ 16005. Duty not to undertake adverse trust

Comment. Section 16005 continues Section 16005 of the repealed Probate Code without change. For provisions permitting the beneficiaries to relieve the trustee from liability, see Sections 16463 (consent), 16464 (release), 16465 (affirmance). See also Sections 16000 (duties subject to control by trust instrument), 16040 (trustee's standard of care in performing duties).

Background on Section 16005 of Repealed Code

Section 16005 was added by 1986 Cal. Stat. ch. 820 § 40. The section superseded former Civil Code Section 2232 (repealed by 1986 Cal. Stat. ch. 820 § 7). For background on the provisions of this division, see the Comment to this division under the division heading.

§ 16006. Duty to take control of and preserve trust property

Comment. Section 16006 continues Section 16006 of the repealed Probate Code without change. This section codifies the substance of Sections 175 and 176 of the Restatement (Second) of Trusts (1957). The section is in accord with prior case law. See, e.g., Purdy v. Bank of America Nat'l Tr. & Sav. Ass'n, 2 Cal. 2d 298, 302-04, 40 P.2d 481 (1935); Estate of Duffill, 188 Cal. 536, 547, 206 P. 42 (1922); Martin v.

Bank of America Nat'l Tr. & Sav. Ass'n, 4 Cal. App. 2d 431, 436, 41 P.2d 200 (1935). For provisions permitting the beneficiaries to relieve the trustee from liability, see Sections 16463 (consent), 16464 (release), 16465 (affirmance). See also Sections 16000 (duties subject to control by trust instrument), 16040 (trustee's standard of care in performing duties).

Background on Section 16006 of Repealed Code

Section 16006 was a new provision added by 1986 Cal. Stat. ch. 820 § 40. For background on the provisions of this division, see the Comment to this division under the division heading.

§ 16007. Duty to make trust property productive

Comment. Section 16007 continues Section 16007 of the repealed Probate Code without change. The section codifies the substance of Section 181 of the Restatement (Second) of Trusts (1957). For the trustee's standard of care governing investments and management of trust property, see Section 16040(b). In appropriate circumstances under Section 16007, property may be made productive by appreciation in value rather than by production of income. If the trust instrument imposes a duty on the trustee to hold property and give possession of it to a beneficiary at a later date, this duty would override the general duty to make the property productive. See Restatement (Second) of Trusts § 181 comment a (1957). Similarly, if a beneficiary has the right under the trust instrument to occupy a home, the trustee would have no duty to make the property productive of income. For provisions permitting the beneficiaries to relieve the trustee from liability, see Sections 16463 (consent), 16464 (release), 16465 (affirmance). See also Section 16000 (duties subject to control by trust instrument).

Background on Section 16007 of Repealed Code

Section 16007 was a new provision added by 1986 Cal. Stat. ch. 820 § 40. For background on the provisions of this division, see the Comment to this division under the division heading.

§ 16008. Duty to dispose of improper investments

Comment. Section 16008 continues Section 16008 of the repealed Probate Code without change. Subdivision (a) codifies the substance of Section 230 of the Restatement (Second) of Trusts (1957), subject to the exception provided in subdivision (b). In contrast with the Restatement rule, subdivision (a) is not limited to property received in the trust at the time of its creation, but applies as well to property added or acquired later. For provisions permitting the beneficiaries to relieve the trustee from liability, see Sections 16463 (consent), 16464 (release), 16465 (affirmance). See also Sections 16000 (duties subject to control by trust instrument), 16040 (trustee's standard of care in performing duties).

Exercise of the discretion under subdivision (b) is governed by the general standard of care provided in Section 16040. See also Sections 16220 (power to collect and hold property), 16221 (power to receive additions to trust).

Background on Section 16008 of Repealed Code

Section 16008 was added by 1986 Cal. Stat. ch. 820 § 40. Subdivision (a) was new. Subdivision (b) restated the exception to the traditional duty to dispose of "improper investments" which was provided in the first sentence of former Civil Code Section 2261(b) (repealed by 1986 Cal. Stat. ch. 820 § 7). Subdivision (b) did not continue the standard of care provided in former Civil Code Section 2261(b). For background on the provisions of this division, see the Comment to this division under the division heading.

§ 16009. Duty to keep trust property separate and identified

Comment. Section 16009 continues Section 16009 of the repealed Probate Code without change. This section codifies the substance of Section 179 of the Restatement (Second) of Trusts (1957), but the Restatement provision for keeping trust property separate from the trustee's individual property is omitted since it is redundant with subdivision (a). For exceptions to this general duty, see, e.g., Fin. Code §§ 1563 (securities registered in name of nominee), 1564 (Uniform Common Trust Fund Act). For provisions permitting the beneficiaries to relieve the trustee from liability, see Sections 16463 (consent), 16464 (release), 16465 (affirmance). See also Sections 16000 (duties subject to control by trust instrument), 16040 (trustee's standard of care in performing duties).

Background on Section 16009 of Repealed Code

Section 16009 was added by 1986 Cal. Stat. ch. 820 § 40. The section superseded the rule against commingling provided in former Civil Code Section 2236 (repealed by 1986 Cal. Stat. ch. 820 § 7). For background on the provisions of this division, see the Comment to this division under the division heading.

§ 16010. Duty to enforce claims

Comment. Section 16010 continues Section 16010 of the repealed Probate Code without change. This section codifies the substance of Section 177 of the Restatement (Second) of Trusts (1957) and is in accord with prior case law. See Ellig v. Naglee, 9 Cal. 683, 695-96 (1858). Depending upon the circumstances of the case, it might not be reasonable to enforce a claim in view of the likelihood of recovery and the cost of suit and enforcement. For provisions permitting the beneficiaries to relieve the trustee from liability, see Sections 16463 (consent), 16464 (release), 16465 (affirmance). See also Sections 16000 (duties subject to control by trust instrument), 16040 (trustee's standard of care in performing duties).

Background on Section 16010 of Repealed Code

Section 16010 was a new provision added by 1986 Cal. Stat. ch. 820 § 40. For background on the provisions of this division, see the Comment to this division under the division heading.

§ 16011. Duty to defend actions

Comment. Section 16011 continues Section 16011 of the repealed Probate Code without change. This section codifies the substance of the first part of Section 178 of the Restatement (Second) of Trusts (1957) and is in accord with prior case law. See, e.g., Estate of Duffill, 188 Cal. 536, 554-55, 206 P. 42 (1922). Depending on the circumstances of the case, it might be reasonable to settle an action or suffer a default rather than to defend an action. For provisions permitting the beneficiaries to relieve the trustee from liability, see Sections 16463 (consent), 16464 (release), 16465 (affirmance). See also Sections 16000 (duties subject to control by trust instrument), 16040 (trustee's standard of care in performing duties).

Background on Section 16011 of Repealed Code

Section 16011 was a new provision added by 1986 Cal. Stat. ch. 820 § 40. For background on the provisions of this division, see the Comment to this division under the division heading.

§ 16012. Duty not to delegate

Comment. Section 16012 continues Section 16012 of the repealed Probate Code without change.

The first part of subdivision (a) codifies the substance of Section 171 of the Restatement (Second) of Trusts (1957). The second part of subdivision (a) codifies the substance of Section 4 of the Uniform Trustees' Powers Act (1964). As to the construction of provisions drawn from uniform acts, see Section 2. The duty not to delegate administration of the trust does not preclude employment of an agent in a proper case. A trust company may delegate matters involved in trust administration to its affiliates. For provisions permitting the beneficiaries to relieve the trustee from liability, see Sections 16463 (consent), 16464 (release), 16465 (affirmance). See also Sections 15620 (actions by cotrustees), 15621 (vacancy in office of cotrustee), 15622 (temporary incapacity of cotrustee), 16000 (duties subject to control by trust instrument), 16040 (trustee's standard of care in performing duties), 16247 (power to hire agents of trust).

Subdivision (b) is drawn from comment k to Section 171 of the Restatement (Second) of Trusts (1957).

Background on Section 16012 of Repealed Code

Section 16012 was a new provision added by 1986 Cal. Stat. ch. 820 § 40. For background on the provisions of this division, see the Comment to this division under the division heading.

§ 16013. Duty with respect to cotrustees

Comment. Section 16013 continues Section 16013 of the repealed Probate Code without change. This section codifies the substance of Section 184 of the Restatement (Second) of Trusts (1957) and is in accord with prior case law. See Bermingham v. Wilcox, 120 Cal. 467, 471-73, 52 P. 822 (1898). For provisions permitting the beneficiaries to relieve the trustee from liability, see Sections 16463 (consent), 16464 (release), 16465 (affirmance). See also Sections 16000 (duties subject to control by trust instrument), 16040 (trustee's standard of care in performing duties), 16402 (trustee's liability to beneficiary for acts of cotrustee). If one cotrustee is also a settlor under a revocable trust, another cotrustee who is not a settlor has a duty to follow the directions of the settlor-cotrustee pursuant to Section 16001. That duty supersedes the general duty under this section.

Background on Section 16013 of Repealed Code

Section 16013 was a new provision added by 1986 Cal. Stat. ch. 820 § 40. For background on the provisions of this division, see the Comment to this division under the division heading.

§ 16014. Duty to use special skills

Comment. Section 16014 continues Section 16014 of the repealed Probate Code without change.

Subdivision (a) codifies a duty set forth in Coberly v. Superior Court, 231 Cal. App. 2d 685, 689, 42 Cal. Rptr. 64 (1965).

Subdivision (b) is similar to the last part of Section 7-302 of the Uniform Probate Code (1987) and the last part of Section 174 of the Restatement (Second) of Trusts (1957). As to the construction of provisions drawn from uniform acts, see Section 2. Subdivision (b) does not limit the duty provided in subdivision (a). Thus, the nature of the trustee's representations to the settlor leading up to the selection of the trustee does not affect the trustee's duty to use the full extent of his or her skills.

For provisions permitting the beneficiaries to relieve the trustee from liability, see Sections 16463 (consent), 16464 (release), 16465 (affirmance). See also Sections 16000 (duties subject to control by trust instrument), 16040 (trustee's standard of care in performing duties).

Background on Section 16014 of Repealed Code

Section 16014 was a new provision added by 1986 Cal. Stat. ch. 820 § 40. For background on the provisions of this division, see the Comment to this division under the division heading.

§ 16015. Certain actions not violations of duties

Comment. Section 16015 continues Section 16015 of the repealed Probate Code without change. This section is consistent with the rule

stated in Estate of Pitzer, 155 Cal. App. 3d 979, 988, 202 Cal. Rptr. 855 (1984). The definition of "affiliate" is the same as that provided in Corporations Code Section 150, with the addition of the reference to "domestic or foreign" corporations.

Background on Section 16015 of Repealed Code

Section 16015 was a new provision added by 1986 Cal. Stat. ch. 820 § 40. For background on the provisions of this division, see the Comment to this division under the division heading.

Article 2. Trustee's Standard of Care

§ 16040. Trustee's standard of care in administering trust

Comment. Section 16040 continues Section 16040 of the repealed Probate Code without change. Subdivision (a) provides a general standard of care for administration of the trust; subdivision (b) provides the standard of care applicable to investment and management of trust property.

An expert trustee is held to the standard of care of other experts. See the discussions in Estate of Collins, 72 Cal. App. 3d 663, 673, 139 Cal. Rptr. 644 (1977); Coberly v. Superior Court, 231 Cal. App. 2d 685, 689, 42 Cal. Rptr. 64 (1965); Estate of Beach, 15 Cal. 3d 623, 635, 542 P.2d 994, 125 Cal. Rptr. 570 (1975) (bank as executor); see also Section 16014 (duty to use special skills); Comment to Section 2401 (standard of care applicable to professional guardian or conservator of estate); Comment to Section 3912 (standard of care applicable to professional fiduciary acting as custodian under California Uniform Transfers to Minors Act). The last sentence of subdivision (b) reflects the portfolio approach for judging investment decisions.

Background on Section 16040 of Repealed Code

Section 16040 was added by 1986 Cal. Stat. ch. 820 § 40. For background on the provisions of this division, see the Comment to this division under the division heading.

Subdivision (a) is drawn from subdivision (a)(1) of former Civil Code Section 2261 (repealed by 1986 Cal. Stat. ch. 820 § 7) which applied to investment and management decisions. This subdivision superseded the "ordinary care and diligence" standard that was provided in former Civil Code Section 2259 (repealed by 1986 Cal. Stat. ch. 820 § 7).

Subdivision (b) restated subdivision (a)(1) of former Civil Code Section 2261 without substantive change. The former reference to attaining the goals of the trustor was changed to refer to accomplishing the purposes of the trust.

Subdivision (c) restated subdivision (a)(2) of former Civil Code Section 2261 without substantive change.

§ 16041. Standard of care not affected by compensation

Comment. Section 16041 continues Section 16041 of the repealed Probate Code without change. A different rule applies to a custodian

under the California Uniform Transfers to Minors Act. See Section 3912(b)(1).

Background on Section 16041 of Repealed Code

Section 16041 was added by 1986 Cal. Stat. ch. 820 § 40. The section restated without substantive change the part of former Civil Code Section 2259 (repealed by 1986 Cal. Stat. ch. 820 § 7) relating to the effect of compensation on the standard of care. For background on the provisions of this division, see the Comment to this division under the division heading.

§ 16042. Interpretation of trust terms concerning legal investments

Comment. Section 16042 continues Section 16042 of the repealed Probate Code without change. See also Section 16203 (effect of trust instrument incorporating the powers provided in former Section 1120.2 of the Probate Code).

Background on Section 16042 of Repealed Code

Section 16042 was added by 1986 Cal. Stat. ch. 820 § 40. The section continued the second sentence of subdivision (e) of former Civil Code Section 2261 (repealed by 1986 Cal. Stat. ch. 820 § 7) without substantive change. For background on the provisions of this division, see the Comment to this division under the division heading.

Article 3. Trustee's Duty to Report Information and Account to Beneficiaries

§ 16060. Trustee's general duty to report information to beneficiaries

Comment. Section 16060 continues Section 16060 of the repealed Probate Code without change. The section is drawn from the first sentence of Section 7-303 of the Uniform Probate Code (1987) and is consistent with the duty stated in prior California case law to give beneficiaries complete and accurate information relative to the administration of a trust when requested at reasonable times. See Strauss v. Superior Court, 36 Cal. 2d 396, 401, 224 P.2d 726 (1950). As to the construction of provisions drawn from uniform acts, see Section 2. The trustee is under a duty to communicate to the beneficiary information that is reasonably necessary to enable the beneficiary to enforce the beneficiary's rights under the trust or to prevent or redress a breach of trust. See Restatement (Second) of Trusts § 173 comment c (1957). Ordinarily, the trustee is not under a duty to furnish information to the beneficiary in the absence of a request for the information. See id. comment d. Thus, the general duty provided in this section is ordinarily satisfied by compliance with Sections 16061 and 16062 unless there are special circumstances requiring particular information to be reported to beneficiaries. However, if the trustee is dealing with the beneficiary on

the trustee's own account, the trustee has a duty to communicate material facts in connection with the transaction that the trustee knows or should know. The trustee also has a duty to communicate material facts affecting the beneficiary's interest that the trustee knows the beneficiary does not know and that the beneficiary needs to know for protection in dealing with a third person. See id. During the time that a revocable trust can be revoked, the duty provided by this section is not owed to the beneficiaries but only to the settlor or other person having the power to revoke. See Section 15800. See also Sections 24 ("beneficiary" defined), 16000 (duties subject to control in trust instrument), 16001 (duties of trustee of revocable trust), 16460 (limitations on proceedings against trustee).

Background on Section 16060 of Repealed Code

Section 16060 was a new provision added by 1986 Cal. Stat. ch. 820 § 40. For background on the provisions of this division, see the Comment to this division under the division heading.

§ 16061. Duty to report information about trust on request

Comment. Section 16061 continues Section 16061 of the repealed Probate Code without change. The section is drawn from Section 7-303(b) of the Uniform Probate Code (1987). As to the construction of provisions drawn from uniform acts, see Section 2. The reference to the acts of the trustee is drawn from former Probate Code Section 1138.1(a)(5) (repealed by 1986 Cal. Stat. ch. 820, § 31). If the trustee does not comply with the reasonable request of the beneficiary, information may be sought on petition pursuant to Section 17200(b)(7). Note that the right to petition for a report or account under Section 17200(b)(7) is limited to one report or account every six months and after a trustee has failed to furnish the report or account within 60 days after a written request. A beneficiary who is not entitled to an annual account under Section 16062 may be entitled to information or a particular account under this section. The availability of information on request under this section does not negate the affirmative duty of the trustee to provide information under Section 16060. During the time that a revocable trust can be revoked, the right to request information pursuant to this section does not belong to the beneficiaries but only to the settlor or other person having the power to revoke. See Section 15800. See also Sections 24 ("beneficiary" defined), 16064 (exceptions to duty to report and account). In an appropriate case, more or different information may be required under this section than through the duty to account annually. See Section 16063 (contents of annual account).

Background on Section 16061 of Repealed Code

Section 16061 was a new provision added by 1986 Cal. Stat. ch. 820 § 40. For background on the provisions of this division, see the Comment to this division under the division heading.

§ 16062. Duty to account to beneficiaries

Comment. Section 16062 continues Section 16062 of the repealed Probate Code without change.

Subdivision (a) imposes the general duty to account at least annually and at the termination of the trust and upon a change of trustees. This duty is subject to the exceptions provided in this section and in Section 16064. The duty to provide information under Section 16060 is not necessarily satisfied by compliance with Section 16062.

Subdivision (b) makes clear that the requirement of furnishing an account under subdivision (a) does not apply to a living trust created by an instrument executed before July 1, 1987. As to the application of any amendments made after that date, see Section 3.

Subdivision (c) provides as a general rule that testamentary trusts that were not subject to continuing court jurisdiction under former law—i.e., trusts created by wills executed between July 1, 1977, and June 30, 1987, and trusts created by earlier wills that were republished during that time—are not subject to the accounting requirements of subdivision (a). However, subdivision (c) makes the accounting requirement of subdivision (a) applicable to testamentary trusts that are removed from continuing jurisdiction under Sections 17350-17354 after July 1, 1987.

Subdivision (d) makes clear that, where a trust was removed from continuing jurisdiction under former law, the annual accounting required by former Probate Code Section 1120.1a(b) (repealed by 1986 Cal. Stat. ch. 820, § 31) is still required, notwithstanding the repeal of Section 1120.1a. For the sake of administrative simplicity, however, this requirement may be satisfied by compliance with Section 16063 (contents of accounting). The introductory clause of subdivision (d) also makes clear that the accounting requirement is subject to relevant exceptions in Section 16064, such as where the beneficiary waives the right to account.

Notwithstanding being excused from the duty to report information or account, the trustee may want to provide information or account to the beneficiaries in order to start the running of the statute of limitations pursuant to Section 16460.

Background on Section 16062 of Repealed Code

Section 16062 was added by 1986 Cal. Stat. ch. 820 § 40 and amended by 1987 Cal. Stat. ch. 128 § 13. Subdivision (a) superseded parts of subdivisions (b) and (c) of former Probate Code Section 1120.1a and parts of former Probate Code Sections 1121

and 1138.1(a)(5) (provisions repealed by 1986 Cal. Stat. ch. 820 § 31). The requirement of an annual account is drawn from the statute formerly applicable to testamentary trusts created before July 1, 1977. See former Prob. Code § 1120.1a (repealed by 1986 Cal. Stat. ch. 820 § 31). For background on the provisions of this division, see the Comment to this division under the division heading.

§ 16063. Contents of account

Comment. Section 16063 continues Section 16063 of the repealed Probate Code without change. Subdivision (f) requires that beneficiaries be given notice of the three-year statute of limitations applicable to claims for breach of trust. See Section 16460. A beneficiary who has received an account that satisfies this section may also request additional information under Section 16061 and may petition for another account under Section 17200(a) and (b)(7) in appropriate circumstances. See also Section 16247 (power to hire agents) and the Comment thereto.

Background on Section 16063 of Repealed Code

Section 16063 was added by 1986 Cal. Stat. ch. 820 § 40 and amended by 1987 Cal. Stat. ch. 128 § 14. Subdivisions (a)-(c) and (e) of Section 16063 are drawn from former Probate Code Section 1120.1a (repealed by 1986 Cal. Stat. ch. 820 § 31) which applied to testamentary trusts created before July 1, 1977, that were removed from continuing jurisdiction. Subdivision (d) was a new provision. For background on the provisions of this division, see the Comment to this division under the division heading.

§ 16064. Exceptions to duty to report information and account

Comment. Section 16064 continues Section 16064 of the repealed Probate Code without change. This section provides several limitations on the duty to report under Section 16061 and the duty to account under Section 16062. See also Sections 24 ("beneficiary" defined), 15800 (limits on rights of beneficiary of revocable trust). Notwithstanding being excused from the duty to report information, the trustee may want to provide information to the beneficiaries in order to start the running of the statute of limitations pursuant to Section 16460. See also Section 17200 (right of trustee or beneficiary to petition the court concerning the internal affairs of the trust).

Background on Section 16064 of Repealed Code

Section 16064 was a new provision added by 1986 Cal. Stat. ch. 820 § 40. For background on the provisions of this division, see the Comment to this division under the division heading.

Article 4. Duties With Regard to Discretionary Powers

§ 16080. Discretionary powers to be exercised reasonably

Comment. Section 16080 continues Section 16080 of the repealed Probate Code without change.

Background on Section 16080 of Repealed Code

Section 16080 was added by 1986 Cal. Stat. ch. 820 § 40. The section continued former Civil Code Section 2269(a) (repealed by 1986 Cal. Stat. ch. 820 § 7) without substantive change. For background on the provisions of this division, see the Comment to this division under the division heading.

§ 16081. Standard for exercise of "absolute," "sole," or "uncontrolled" powers

Comment. Section 16081 continues Section 16081 of the repealed Probate Code without change. See also Section 17200(b)(5) (court review of exercise of discretionary powers).

Background on Section 16081 of Repealed Code

Section 16081 was added by 1986 Cal. Stat. ch. 820 § 40. The section continued subdivision (c) and most of subdivision (d) of former Civil Code Section 2269 (repealed by 1986 Cal. Stat. ch. 820 § 7) without change. For background on the provisions of this division, see the Comment to this division under the division heading.

§ 16082. Limitations on power to appoint or distribute income or principal

Comment. Section 16082 continues Section 16082 of the repealed Probate Code without change. This section is intended to deal with problems that may arise under federal tax law. See I.R.C. §§ 674(a), 678(c), 2036.

Background on Section 16082 of Repealed Code

Section 16082 was added by 1987 Cal. Stat. ch. 128 § 15. The section restated former Civil Code Section 2269(e) (repealed by 1986 Cal. Stat. ch. 820 § 7) without substantive change, as applied to trusts. For background on the provisions of this division, see the Comment to this division under the division heading.

Article 5. Duties of Trustees of Private Foundations, Charitable Trusts, and Split-Interest Trusts

§ 16100. Definitions

Comment. Section 16100 continues Section 16100 of the repealed Probate Code without change. This section defines terms for purposes of this article.

Background on Section 16100 of Repealed Code

Section 16100 was added by 1986 Cal. Stat. ch. 820 § 40. Subdivisions (a) and (b) restated parts of former Civil Code Section 2271 (repealed by 1986 Cal. Stat. ch. 820 § 7) without substantive change. Subdivision (c) restated part of subdivision (a) of former Civil Code Section 2271.1 (repealed by 1986 Cal. Stat. ch. 820 § 7) without substantive change. The references in these former sections to the Tax Reform Act of 1969 were omitted because they were superfluous. See Section 7 (reference to law includes later amendments or additions). For background on the provisions of this division, see the Comment to this division under the division heading.

§ 16101. Distribution under charitable trust or private foundation

Comment. Section 16101 continues Section 16101 of the repealed Probate Code without change. See Section 16100 ("charitable trust" and "private foundation" defined).

Background on Section 16101 of Repealed Code

Section 16101 was added by 1986 Cal. Stat. ch. 820 § 40. The section restated part of the first paragraph of former Civil Code Section 2271 (repealed by 1986 Cal. Stat. ch. 820 § 7) without substantive change. See also Section 10 (singular includes plural). For background on the provisions of this division, see the Comment to this division under the division heading.

§ 16102. Restrictions on trustees under charitable trust, private foundation, or split-interest trust

Comment. Section 16102 continues Section 16102 of the repealed Probate Code without change.

Background on Section 16102 of Repealed Code

Section 16102 was added by 1986 Cal. Stat. ch. 820 § 40. The section restated part of the first paragraph of former Civil Code Section 2271 (applicable to charitable trusts and private foundations) and part of subdivision (a) of former Civil Code Section 2271.1 (applicable to split-interest trusts) (provisions repealed by 1986 Cal. Stat. ch. 820 § 7) without substantive change. The references in former law to specific amendatory sections of the Tax Reform Act of 1969 were omitted because they were unnecessary in view of Section 16100(b). See also Section 10 (singular includes plural). For background on the provisions of this division, see the Comment to this division under the division heading.

§ 16103. Exceptions applicable to split-interest trusts

Comment. Section 16103 continues Section 16103 of the repealed Probate Code without change. See also Section 16100 ("split-interest trust" defined).

Background on Section 16103 of Repealed Code

Section 16103 was added by 1986 Cal. Stat. ch. 820 § 40. The section restated subdivisions (b) and (c) of former Civil Code Section 2271.1 (repealed by 1986 Cal. Stat. ch. 820 § 7) without substantive change, but the word "irrevocably" in subdivision (b)(3) was added for conformity with federal law. For background on the provisions of this division, see the Comment to this division under the division heading.

§ 16104. Incorporation in trust instruments

Comment. Section 16104 continues Section 16104 of the repealed Probate Code without change.

Background on Section 16104 of Repealed Code

Section 16104 was added by 1986 Cal. Stat. ch. 820 § 40. The section restated the second paragraph of former Civil Code Section 2271 and subdivision (d) of former Civil Code Section 2271.1 (provisions repealed by 1986 Cal. Stat. ch. 820 § 7) without substantive change. For background on the provisions of this division, see the Comment to this division under the division heading.

§ 16105. Proceedings

Comment. Section 16105 continues Section 16105 of the repealed Probate Code without change. See also Sections 17200(b)(19) (petition for purpose of Section 16105), 17203(c) (notice to Attorney General). For the text of Section 101*(l)*(3) of the Tax Reform Act of 1969, relating to judicial proceedings by a private foundation that are necessary to reform or excuse compliance with its governing instrument to comply with 26 U.S.C. § 4942, see the note following 26 U.S.C.A. § 4940.

Background on Section 16105 of Repealed Code

Section 16105 was added by 1986 Cal. Stat. ch. 820 § 40. The section restated former Civil Code Section 2271.2 (repealed by 1986 Cal. Stat. ch. 820 § 7) without substantive change. The reference to the procedure applicable to the internal affairs of trusts in Section 17200 was new. For background on the provisions of this division, see the Comment to this division under the division heading.

CHAPTER 2. POWERS OF TRUSTEES

Article 1. General Provisions

§ 16200. General powers of trustee

Comment. Section 16200 continues Section 16200 of the repealed Probate Code without change. This section is drawn from Sections 2(a) and 3(a) of the Uniform Trustees' Powers Act (1964) and from various California statutes that existed before the enactment of Section 16200 of the repealed Probate Code. As to the construction of provisions drawn from uniform acts, see Section 2.

The introductory clause of Section 16200 makes clear that the trustee has the powers as provided in this section without the need to obtain court authorization. See also Section 16201 (power of court to relieve trustee from restrictions on powers).

Subdivision (b) gives the trustee the statutory powers without the need to incorporate them. The main list of powers is provided in Article 2 (commencing with Section 16220). Additional powers are provided by statutes outside this chapter. See, e.g., Section 16300 et seq. (Revised Uniform Principal and Income Act).

Under subdivision (c), the trustee has the powers of a prudent person, without the need to obtain prior court approval. However, if the trustee desires court approval before exercising a power or desires court review after exercise of a power, the procedure provided in Section 17200 et seq. is available. This subdivision is drawn from Section 3(a) of the Uniform Trustees' Powers Act (1964). As to the construction of provisions drawn from uniform acts, see Section 2.

The exercise of powers by the trustee is subject to various important limitations as recognized in this section and as provided elsewhere. Subdivisions (b) and (c) make clear that the exercise of statutory or "prudent person" powers is subject to limitations provided in the trust. Section 16202 makes clear that the exercise of powers by the trustee is subject to the fiduciary duties owed to the beneficiaries. See the Comment to Section 16202; see also Section 16201 (power of court to relieve trustee from restrictions on powers). As to the construction of trust language that refers to "investments permissible by law for investment of trust funds," "authorized by law for investment of trust funds," "legal investments," "authorized investments," or "investments acquired using the judgment and care which men of prudence, discretion, and intelligence exercise in the management of their own affairs," or other words of similar meaning in defining the powers of the trustee relative to investments, see Section 16042.

Background on Section 16200 of Repealed Code

Section 16200 was added by 1986 Cal. Stat. ch. 820 § 40. For background on the provisions of this division, see the Comment to this division under the division heading.

Subdivisions (a) and (b) superseded part of former Civil Code Section 2240 (power to deposit securities subject to contrary provision in trust instrument) and restated the second sentence of former Civil Code Section 2267 (trustee has authority conferred by trust instrument and statute) (provisions repealed by 1986 Cal. Stat. ch. 820 § 7) without substantive change. Subdivision (b) also superseded the authority to make deposits provided in subdivision (c) of former Civil Code Section 2261 (repealed by 1986 Cal. Stat. ch. 820 § 7). Subdivision (a) was consistent with the part of subdivision (a) of former Civil Code Section 2258 (repealed by 1986 Cal. Stat. ch. 820 § 7) that required the trustee to fulfill the purposes of the trust.

The introductory clause of Section 16200 superseded the first paragraph of former Probate Code Section 1120.2 which required court approval to exercise powers not expressed in the trust and subdivision (18) of former Probate Code Section 1120.2 (repealed by 1986 Cal. Stat. ch. 820 § 31) which gave the court authority to grant necessary or desirable powers.

Subdivision (b) gave the trustee the statutory powers without the need to incorporate them, as was required under former Probate Code Section 1120.2.

§ 16201. Power of court to relieve trustee from restrictions on powers

Comment. Section 16201 continues Section 16201 of the repealed Probate Code without change. This section did not change the prior case law rule permitting deviation from trust restrictions as necessary in unforeseen circumstances. See, e.g., Estate of Loring, 29 Cal. 2d 423, 436-37, 175 P.2d 524 (1946); Adams v. Cook, 15 Cal. 2d 352, 359, 101 P.2d 484 (1940); Estate of Mabury, 54 Cal. App. 3d 969, 984-85, 127 Cal. Rptr. 233 (1976); see also Restatement (Second) of Trusts § 167 (1957). For a provision permitting the court to modify a trust where there has been a material change of circumstances, see Section 15409. As to the construction of trust language that refers to "investments permissible by law for investment of trust funds," "authorized by law for investment of trust funds," "legal investments," "authorized investments," or "investments acquired using the judgment and care which men of prudence, discretion, and intelligence exercise in the management of their own affairs," or other words of similar meaning in defining the powers of the trustee relative to investments, see Section 16042.

Background on Section 16201 of Repealed Code

Section 16201 was added by 1986 Cal. Stat. ch. 820 § 40. The section restated subdivision (d) of former Civil Code Section 2261 (repealed by 1986 Cal. Stat. ch. 820 § 7) without substantive change, except that the rule was made general and was not restricted to the making or retention of investments as under former Civil Code Section 2261(d). Section 16201 also superseded subdivision (18) of former Probate Code Section 1120.2 (repealed by 1986 Cal. Stat. ch. 820 § 31). For background on the

provisions of this division, see the Comment to this division under the division heading.

§ 16202. Exercise of powers subject to trustee's duties

Comment. Section 16202 continues Section 16202 of the repealed Probate Code without change. This section recognizes that a power granted to the trustee from any source does not necessarily permit the exercise of the power, nor does it prevent the exercise of a power in a manner that conflicts with a general duty where the trust instrument so directs (see Section 16000) or where the trustee is directed so to act by a person holding the power to revoke the trust (see Section 16001). For example, the trust instrument may give the trustee discretion to favor one beneficiary over others, in apparent conflict with the general duty to deal with beneficiaries impartially under Section 16003. See also Section 16000 et seq. (trustee's fiduciary duties). As to the construction of trust language that refers to "investments permissible by law for investment of trust funds," "authorized by law for investment of trust funds," "legal investments," "authorized investments," or "investments acquired using the judgment and care which men of prudence, discretion, and intelligence exercise in the management of their own affairs," or other words of similar meaning in defining the powers of the trustee relative to investments, see Section 16042.

Background on Section 16202 of Repealed Code

Section 16202 was a new provision added by 1986 Cal. Stat. ch. 820 § 40. For background on the provisions of this division, see the Comment to this division under the division heading.

§ 16203. Application of rules governing trustees' powers

Comment. Section 16203 continues Section 16203 of the repealed Probate Code with technical changes. This section makes clear the effect of references in instruments to the former provisions listing trustees' powers. As to the construction of trust language that refers to "investments permissible by law for investment of trust funds," "authorized by law for investment of trust funds," "legal investments," "authorized investments," or "investments acquired using the judgment and care which men of prudence, discretion, and intelligence exercise in the management of their own affairs," or other words of similar meaning in defining the powers of the trustee relative to investments, see Section 16042.

Background on Section 16203 of Repealed Code

Section 16203 was a new provision added by 1986 Cal. Stat. ch. 820 § 40. For background on the provisions of this division, see the Comment to this division under the division heading.

Article 2. Specific Powers of Trustees

§ 16220. Collecting and holding property

Comment. Section 16220 continues Section 16220 of the repealed Probate Code without change. This section is the same in substance as Section 3(c)(1) of the Uniform Trustees' Powers Act (1964). As to the construction of provisions drawn from uniform acts, see Section 2. The exercise of the power to hold property under this section is subject to the limitation provided in Section 21524(c) in the case of a marital deduction trust. See also Sections 62 ("property" defined), 16042 (construction of trust language concerning investment powers), 16202 (exercise of powers is subject to duties), 16203 (trust instrument that incorporates the powers provided in former Section 1120.2 of the repealed Probate Code).

Background on Section 16220 of Repealed Code

Section 16220 was added by 1986 Cal. Stat. ch. 820 § 40. The section superseded part of subdivision (b) of former Civil Code Section 2261 (repealed by 1986 Cal. Stat. ch. 820 § 7) and part of subdivision (2) of former Probate Code Section 1120.2 (repealed by 1986 Cal. Stat. ch. 820 § 31). The specific references to stock in the trustee or in a corporation controlling or controlled by the trustee in former Civil Code Section 2261(b) and in former Probate Code Section 1120.2(2) were omitted from Section 16220 because they were unnecessary; however, the substance of the law was not changed by Section 16220 since stock of the type described by the former provisions is within the general language of the new law. See Section 62 ("property" defined). For background on the provisions of this division, see the Comment to this division under the division heading.

§ 16221. Receiving additions to trust

Comment. Section 16221 continues Section 16221 of the repealed Probate Code without change. This section is the same in substance as Section 3(c)(2) of the Uniform Trustees' Powers Act (1964). As to the construction of provisions drawn from uniform acts, see Section 2. See also Sections 62 ("property" defined), 16202 (exercise of powers is subject to duties), 16203 (trust instrument that incorporates the powers provided in former Section 1120.2 of the repealed Probate Code).

Background on Section 16221 of Repealed Code

Section 16221 was added by 1986 Cal. Stat. ch. 820 § 40. The section superseded part of the first sentence of subdivision (b) of former Probate Code Section 1120 and paragraph (3) of subdivision (a) of former Probate Code Section 1138.1 (provisions repealed by 1986 Cal. Stat. ch. 820 § 31). For background on the provisions of this division, see the Comment to this division under the division heading.

§ 16222. Participation in business; change in form of business

Comment. Section 16222 continues Section 16222 of the repealed Probate Code without change. Subdivision (a) is similar to Section 3(c)(3) of the Uniform Trustees' Powers Act (1964). As to the construction of provisions drawn from uniform acts, see Section 2.

Under Section 16222, the trustee may have the power to continue a business that is made part of the trust, but may not enter into a new business. See also 16042 (construction of trust language concerning investment powers), 16202 (exercise of powers is subject to duties), 16203 (trust instrument that incorporates the powers provided in former Section 1120.2 of the repealed Probate Code).

Subdivision (b) excludes the lease of four or fewer residential units from the requirement that the trustee obtain court approval to continue operation of a business or other enterprise that is a part of trust property. It is irrelevant whether the residential units are located in one or more buildings or on one or more lots.

Subdivision (d) limits the rule in subdivision (b) requiring court authorization for the trustee to operate a business or other enterprise that is a part of trust property. This is a special application of the rule stated in Section 16203.

Background on Section 16222 of Repealed Code

Section 16222 was added by 1986 Cal. Stat. ch. 820 § 40 and amended by 1987 Cal. Stat. ch. 128 § 16. Subdivision (a) continued subdivision (17) of former Probate Code Section 1120.2 (repealed by 1986 Cal. Stat. ch. 820 § 31) without substantive change. Subdivisions (b) and (c) were new. For background on the provisions of this division, see the Comment to this division under the division heading.

§ 16223. Investments

Comment. Section 16223 continues Section 16223 of the repealed Probate Code without change. This section is the same in substance as Section 3(c)(5) of the Uniform Trustees' Powers Act (1964), except that surplus language has been omitted. As to the construction of provisions drawn from uniform acts, see Section 2. Under this section, any form of investment is permissible in the absence of a prohibition in the trust instrument or an overriding duty. This section is intended to permit investment in investment company shares, mutual funds, index funds, and other modern vehicles for collective investments. While investment in these funds is not forbidden merely because discretion over the fund is delegated to others, the trustee is ultimately subject to general fiduciary standards of care in making the investment. See Section 16040 (standard of care). See also Sections 62 ("property" defined), 16042 (construction of trust language concerning investment powers), 16202 (exercise of powers is subject to duties), 16203 (trust instrument that incorporates the powers provided in former Section 1120.2 of the repealed Probate Code).

Statutes pertaining to legal investments appear in other codes. See, e.g., Fin. Code § 1564 (common trust funds); Gov't Code §§ 971.2, 17202, 61673; Harb. & Nav. Code §§ 6331, 6931; Health & Safety Code §§ 33663, 34369, 37649, 52040, 52053.5; Pub. Res. Code § 26026; Sts.

& Hy. Code §§ 8210, 25371, 30241, 30242, 31173; Water Code §§ 9526, 20064.

Background on Section 16223 of Repealed Code

Section 16223 was added by 1986 Cal. Stat. ch. 820 § 40. The section restated without substantive change part of subdivision (2) of former Probate Code Section 1120.2 (repealed by 1986 Cal. Stat. ch. 820 § 31) and part of paragraph (1) of subdivision (a) of former Civil Code Section 2261 (repealed by 1986 Cal. Stat. ch. 820 § 7). For background on the provisions of this division, see the Comment to this division under the division heading.

§ 16224. Investments in obligations of United States government

Comment. Section 16224 continues Section 16224 of the repealed Probate Code without change. See also Sections 16042 (construction of trust language concerning investment powers), 16202 (exercise of powers is subject to duties), 16203 (trust instrument that incorporates the powers provided in former Section 1120.2 of the repealed Probate Code).

Background on Section 16224 of Repealed Code

Section 16224 was added by 1986 Cal. Stat. ch. 820 § 40. The section continued the first sentence of subdivision (a) and subdivision (b) of former Civil Code Section 2269.1 (repealed by 1986 Cal. Stat. ch. 820 § 7) with some technical changes to eliminate surplus language. For background on the provisions of this division, see the Comment to this division under the division heading.

§ 16225. Deposits

Comment. Section 16225 continues Section 16225 of the repealed Probate Code without change. See Section 21 ("account" defined). See also Section 16202 (exercise of powers is subject to duties). See also Fin. Code § 764 (fiduciaries' deposits in banks). For other provisions relating to deposits by trustees, see Fin. Code §§ 7000-7002. See also Uniform Trustees' Powers Act § 3(c)(6) (1964). The definition of "affiliated" in second sentence of subdivision (b) is the same as that provided in Corporations Code Section 150. Court authorization under subdivision (d) may be obtained as provided in Section 17200(b)(2), (5), and (6). Section 16225 is comparable to Sections 2453 and 2453.5 (deposits by guardians and conservators).

Subdivision (e) recognizes that the limitation of the power to make deposits to accounts affording reasonable interest provided in subdivision (a) is not absolute but is subject to reasonable requirements of trust administration. Subdivision (e) is consistent with Section 9705(b) (administration of decedent's estate).

Background on Section 16225 of Repealed Code

Section 16225 was added by 1986 Cal. Stat. ch. 820 § 40 and was amended by 1988 Cal. Stat. ch. 1199 § 105.5. The section restated the part of subdivision (c) of former Civil Code Section 2261 (repealed by 1986 Cal. Stat. ch. 820 § 7) relating to deposits in banks. The requirement that funds be deposited at reasonable interest was new. The

limitation on bank deposits in subdivision (a)(1) was the same as that provided in former Civil Code Section 2261(c), except that the reference to present or future laws of the United States was omitted as unnecessary. Subdivisions (a)(2) and (a)(3) incorporated limitations applicable under the guardianship and conservatorship statute; the language relating to the extent to which trust funds may be deposited in such accounts was new. Subdivisions (b)-(d) of Section 16225 restated part of subdivision (c) of former Civil Code Section 2261 without substantive change. Subdivision (e) was new. For background on the provisions of this division, see the Comment to this division under the division heading.

The 1988 amendment conformed the terminology of subdivision (a) of Section 16225 to the general definitions. See Sections 22 (account in an insured credit union), 23 (account in an insured savings and loan association), 40 (financial institution), 46 (insured account in a financial institution). The 1988 amendment was technical and nonsubstantive.

§ 16226. Acquisition and disposition of property

Comment. Section 16226 continues Section 16226 of the repealed Probate Code without change. This section is the same in substance as part of Section 3(c)(7) of the Uniform Trustees' Powers Act (1964). As to the construction of provisions drawn from uniform acts, see Section 2. See also Sections 62 ("property" defined), 16042 (construction of trust language concerning investment powers), 16202 (exercise of powers is subject to duties), 16203 (trust instrument that incorporates the powers provided in former Section 1120.2 of the repealed Probate Code).

Background on Section 16226 of Repealed Code

Section 16226 was added by 1986 Cal. Stat. ch. 820 § 40. The section restated part of the second sentence of paragraph (1) of subdivision (a) of former Civil Code Section 2261 (repealed by 1986 Cal. Stat. ch. 820 § 7) and part of subdivision (5) of former Probate Code Section 1120.2 (repealed by 1986 Cal. Stat. ch. 820 § 31) without substantive change. Section 16226 also superseded the part of subdivision (1) of former Probate Code Section 1120.2 pertaining to sale of trust assets on deferred payments. For background on the provisions of this division, see the Comment to this division under the division heading.

§ 16227. Management of property

Comment. Section 16227 continues Section 16227 of the repealed Probate Code without change. This section is the same in substance as part of Section 3(c)(7) of the Uniform Trustees' Powers Act (1964). As to the construction of provisions drawn from uniform acts, see Section 2. See also Sections 62 ("property" defined), 16042 (construction of trust language concerning investment powers), 16202 (exercise of powers is subject to duties), 16203 (trust instrument that incorporates the powers provided in former Section 1120.2 of the repealed Probate Code).

Background on Section 16227 of Repealed Code

Section 16227 was added by 1986 Cal. Stat. ch. 820 § 40. The section continued the authority to manage, control, or divide property provided in subdivision (1) of former Probate Code Section 1120.2 (repealed by 1986 Cal. Stat. ch. 820 § 31) and part of

subdivision (5) of former Probate Code Section 1120.2 without change, except that "property" was used in place of "asset." For background on the provisions of this division, see the Comment to this division under the division heading.

§ 16228. Encumbrances

Comment. Section 16228 continues Section 16228 of the repealed Probate Code without change. This section is the same in substance as part of Section 3(c)(7) of the Uniform Trustees' Powers Act (1964). As to the construction of provisions drawn from uniform acts, see Section 2. See also Sections 62 ("property" defined), 16042 (construction of trust language concerning investment powers), 16202 (exercise of powers is subject to duties), 16203 (trust instrument that incorporates the powers provided in former Section 1120.2 of the repealed Probate Code).

Background on Section 16228 of Repealed Code

Section 16228 was added by 1986 Cal. Stat. ch. 820 § 40. The section superseded part of subdivision (3) of former Probate Code Section 1120.2 (repealed by 1986 Cal. Stat. ch. 820 § 31). For background on the provisions of this division, see the Comment to this division under the division heading.

§ 16229. Repairs and alterations of property

Comment. Section 16229 continues Section 16229 of the repealed Probate Code without substantive change. This section is the same in substance as Section 3(c)(8) of the Uniform Trustees' Powers Act (1964). As to the construction of provisions drawn from uniform acts, see Section 2. See also Sections 16042 (construction of trust language concerning investment powers), 16202 (exercise of powers is subject to duties), 16203 (trust instrument that incorporates the powers provided in former Section 1120.2 of the repealed Probate Code).

Background on Section 16229 of Repealed Code

Section 16229 was added by 1986 Cal. Stat. ch. 820 § 40. The section continued subdivision (6) of former Probate Code Section 1120.2 (repealed by 1986 Cal. Stat. ch. 820 § 31) without substantive change but the reference to improvements was new. For background on the provisions of this division, see the Comment to this division under the division heading.

§ 16230. Development of land

Comment. Section 16230 continues Section 16230 of the repealed Probate Code without change. This section is the same in substance as Section 3(c)(9) of the Uniform Trustees' Powers Act (1964). As to the construction of provisions drawn from uniform acts, see Section 2. See also Sections 16042 (construction of trust language concerning investment powers), 16202 (exercise of powers is subject to duties), 16203 (trust instrument that incorporates the powers provided in former Section 1120.2 of the repealed Probate Code).

Background on Section 16230 of Repealed Code

Section 16230 was added by 1986 Cal. Stat. ch. 820 § 40. The section continued subdivision (7) of former Probate Code Section 1120.2 (repealed by 1986 Cal. Stat. ch. 820 § 31) without substantive change. For background on the provisions of this division, see the Comment to this division under the division heading.

§ 16231. Leases

Comment. Section 16231 continues Section 16231 of the repealed Probate Code without change. This section is the same in substance as Section 3(c)(10) of the Uniform Trustees' Powers Act (1964). As to the construction of provisions drawn from uniform acts, see Section 2. See also Sections 16042 (construction of trust language concerning investment powers), 16202 (exercise of powers is subject to duties), 16203 (trust instrument that incorporates the powers provided in former Section 1120.2 of the repealed Probate Code).

Background on Section 16231 of Repealed Code

Section 16231 was added by 1986 Cal. Stat. ch. 820 § 40. The section restated part of subdivision (1) of former Probate Code Section 1120.2 (repealed by 1986 Cal. Stat. ch. 820 § 31) without substantive change and superseded former Civil Code Section 2272 (repealed by 1986 Cal. Stat. ch. 820 § 7). For background on the provisions of this division, see the Comment to this division under the division heading.

§ 16232. Mineral leases

Comment. Section 16232 continues Section 16232 of the repealed Probate Code with the addition of a reference to geothermal energy. The reference to a pooling or unitization agreement is drawn from Section 3(c)(11) of the Uniform Trustees' Powers Act (1964). As to the construction of provisions drawn from uniform acts, see Section 2. The authority to make leases or agreements extending beyond the term of the trust is consistent with Section 16231 (general power to lease). See also Sections 16042 (construction of trust language concerning investment powers), 16202 (exercise of powers is subject to duties), 16203 (trust instrument that incorporates the powers provided in former Section 1120.2 of the repealed Probate Code).

Background on Section 16232 of Repealed Code

Section 16232 was added by 1986 Cal. Stat. ch. 820 § 40. The section restated part of subdivision (1) of former Probate Code Section 1120.2 (repealed by 1986 Cal. Stat. ch. 820 § 31) without substantive change and added the reference to a pooling or unitization agreement drawn from Section 3(c)(11) of the Uniform Trustees' Powers Act (1964). As to the construction of provisions drawn from uniform acts, see Section 2. For background on the provisions of this division, see the Comment to this division under the division heading.

§ 16233. Options

Comment. Section 16233 continues Section 16233 of the repealed Probate Code without change. This section is the same in substance as

Section 3(c)(12) of the Uniform Trustees' Powers Act (1964). As to the construction of provisions drawn from uniform acts, see Section 2. The authority to grant or take options exercisable beyond the term of the trust is consistent with Section 16231 (general power to lease). An option under this section includes a right of first refusal. See also Sections 62 ("property" defined), 16042 (construction of trust language concerning investment powers), 16202 (exercise of powers is subject to duties), 16203 (trust instrument that incorporates the powers provided in former Section 1120.2 of the repealed Probate Code).

Background on Section 16233 of Repealed Code

Section 16233 was added by 1986 Cal. Stat. ch. 820 § 40. The first half of Section 16233 continued subdivision (8) of former Probate Code Section 1120.2 (repealed by 1986 Cal. Stat. ch. 820 § 31) without substantive change, but the word "property" was used in place of "asset." The authority to grant or take options exercisable beyond the term of the trust was new. For background on the provisions of this division, see the Comment to this division under the division heading.

§ 16234. Voting rights with respect to corporate shares, memberships, or property

Comment. Section 16234 continues Section 16234 of the repealed Probate Code without change. This section is comparable to Section 2458 (voting rights under guardianship and conservatorship statute). See also Corp. Code §§ 702(a) (voting of shares by trustee), 703(c) (voting of shares in corporate trustee), 705 (proxies); Prob. Code §§ 16042 (construction of trust language concerning investment powers), 16202 (exercise of powers is subject to duties), 16203 (trust instrument that incorporates the powers provided in former Section 1120.2 of the repealed Probate Code).

Background on Section 16234 of Repealed Code

Section 16234 was added by 1986 Cal. Stat. ch. 820 § 40. The section restated without substantive change subdivision (9) of former Probate Code Section 1120.2 (repealed by 1986 Cal. Stat. ch. 820 § 31) and former Civil Code Section 2270 (repealed by 1986 Cal. Stat. ch. 820 § 7), except that the requirement in former Civil Code Section 2270 that authorizations be in writing was omitted. For background on the provisions of this division, see the Comment to this division under the division heading.

§ 16235. Payment of calls and assessments

Comment. Section 16235 continues Section 16235 of the repealed Probate Code without change. This section is the same as Section 3(c)(14) of the Uniform Trustees' Powers Act (1964). As to the construction of provisions drawn from uniform acts, see Section 2. See also Sections 16042 (construction of trust language concerning investment powers), 16202 (exercise of powers is subject to duties),

16203 (trust instrument that incorporates the powers provided in former Section 1120.2 of the repealed Probate Code).

Background on Section 16235 of Repealed Code

Section 16235 was added by 1986 Cal. Stat. ch. 820 § 40. The section continued subdivision (10) of former Probate Code Section 1120.2 (repealed by 1986 Cal. Stat. ch. 820 § 31) without substantive change. For background on the provisions of this division, see the Comment to this division under the division heading.

§ 16236. Stock subscriptions and conversions

Comment. Section 16236 continues Section 16236 of the repealed Probate Code without change. This section is the same as the first part of Section 3(c)(15) of the Uniform Trustees' Powers Act (1964). As to the construction of provisions drawn from uniform acts, see Section 2. See also Sections 16042 (construction of trust language concerning investment powers), 16202 (exercise of powers is subject to duties), 16203 (trust instrument that incorporates the powers provided in former Section 1120.2 of the repealed Probate Code).

Background on Section 16236 of Repealed Code

Section 16236 was added by 1986 Cal. Stat. ch. 820 § 40. The section continued subdivision (11) of former Probate Code Section 1120.2 (repealed by 1986 Cal. Stat. ch. 820 § 31) without substantive change. For background on the provisions of this division, see the Comment to this division under the division heading.

§ 16237. Consent to change in form of business; voting trusts

Comment. Section 16237 continues Section 16237 of the repealed Probate Code without substantive change. This section, in part, is similar to the second part of Section 3(c)(15) of the Uniform Trustees' Powers Act (1964). As to the construction of provisions drawn from uniform acts, see Section 2. See also Sections 16042 (construction of trust language concerning investment powers), 16202 (exercise of powers is subject to duties), 16203 (trust instrument that incorporates the powers provided in former Section 1120.2 of the repealed Probate Code).

Background on Section 16237 of Repealed Code

Section 16237 was added by 1986 Cal. Stat. ch. 820 § 40. The section continued subdivision (4) of former Probate Code Section 1120.2 (repealed by 1986 Cal. Stat. ch. 820 § 31) without substantive change. For background on the provisions of this division, see the Comment to this division under the division heading.

§ 16238. Holding securities in name of nominee

Comment. Section 16238 continues Section 16238 of the repealed Probate Code, but deletes the reference to the liability of the trustee for an act of the nominee for consistency with Section 9736 (decedent's estate management). This matter is governed by general provisions on liability of a trustee. See, e.g., Section 16401. This section is comparable to Section 3(c)(16) of the Uniform Trustees' Powers Act (1964). As to the

construction of provisions drawn from uniform acts, see Section 2. See also Corp. Code § 702(a) (trustee not entitled to vote shares without transfer into trustee's name); Fin. Code § 1563 (trust company may register securities in name of nominee); Prob. Code §§ 16042 (construction of trust language concerning investment powers), 16202 (exercise of powers is subject to duties), 16203 (trust instrument that incorporates the powers provided in former Section 1120.2 of the repealed Probate Code).

Background on Section 16238 of Repealed Code

Section 16238 was added by 1986 Cal. Stat. ch. 820 § 40. The section continued subdivision (12) of former Probate Code Section 1120.2 (repealed by 1986 Cal. Stat. ch. 820 § 31) without substantive change. For background on the provisions of this division, see the Comment to this division under the division heading.

§ 16239. Deposit of securities in securities depository

Comment. Section 16239 continues Section 16239 of the repealed Probate Code without change. See also Sections 16042 (construction of trust language concerning investment powers), 16200 (powers subject to control by trust instrument), 16202 (exercise of powers is subject to duties), 16203 (trust instrument that incorporates the powers provided in former Section 1120.2 of the repealed Probate Code).

Background on Section 16239 of Repealed Code

Section 16239 was added by 1986 Cal. Stat. ch. 820 § 40. The section continued part of former Civil Code Section 2240 (repealed by 1986 Cal. Stat. ch. 820 § 7) without substantive change. Section 16239 did not continue the provision in former Civil Code Section 2240 relating to consent by cofiduciaries. See Section 15620 (actions by cotrustees). For background on the provisions of this division, see the Comment to this division under the division heading.

§ 16240. Insurance

Comment. Section 16240 continues Section 16240 of the repealed Probate Code without change. This section is the same in substance as Section 3(c)(17) of the Uniform Trustees' Powers Act (1964). As to the construction of provisions drawn from uniform acts, see Section 2. See also Sections 62 ("property" defined), 16042 (construction of trust language concerning investment powers), 16202 (exercise of powers is subject to duties), 16203 (trust instrument that incorporates the powers provided in former Section 1120.2 of the repealed Probate Code).

Background on Section 16240 of Repealed Code

Section 16240 was added by 1986 Cal. Stat. ch. 820 § 40. The section restated subdivision (13) of former Probate Code Section 1120.2 (repealed by 1986 Cal. Stat. ch. 820 § 31) without substantive change. For background on the provisions of this division, see the Comment to this division under the division heading.

§ 16241. Borrowing money

Comment. Section 16241 continues Section 16241 of the repealed Probate Code without change. The first sentence of this section is similar to part of Section 3(c)(18) of the Uniform Trustees' Powers Act (1964). As to the construction of provisions drawn from uniform acts, see Section 2. See also Sections 62 ("property" defined), 16042 (construction of trust language concerning investment powers), 16202 (exercise of powers is subject to duties), 16203 (trust instrument that incorporates the powers provided in former Section 1120.2 of the repealed Probate Code).

Background on Section 16241 of Repealed Code

Section 16241 was added by 1986 Cal. Stat. ch. 820 § 40 and amended by 1988 Cal. Stat. ch. 1341 § 1. As enacted, the section superseded the authority to borrow provided in subdivision (3) of former Probate Code Section 1120.2 (repealed by 1986 Cal. Stat. ch. 820 § 31). For background on the provisions of this division, see the Comment to this division under the division heading. The 1988 amendment added the second sentence.

§ 16242. Payment and settlement of claims

Comment. Section 16242 continues Section 16242 of the repealed Probate Code without change. This section is substantially the same as Section 3(c)(19) of the Uniform Trustees' Powers Act (1964). As to the construction of provisions drawn from uniform acts, see Section 2. The trustee has the power to release a claim; the determination of when to release a claim depends upon the duties imposed on the trustee. As a general matter, the trustee should be able to release a claim not only when it is uncollectible, but also when it is uneconomical to attempt to collect it. See also Sections 16010 (duty to enforce claims), 16011 (duty to defend actions), 16042 (construction of trust language concerning investment powers), 16202 (exercise of powers is subject to duties), 16203 (trust instrument that incorporates the powers provided in former Section 1120.2 of the repealed Probate Code).

Background on Section 16242 of Repealed Code

Section 16242 was added by 1986 Cal. Stat. ch. 820 § 40. Subdivisions (a) and (b) continued the first and second clauses of subdivision (15) of former Probate Code Section 1120.2 (repealed by 1986 Cal. Stat. ch. 820 § 31) without substantive change. Subdivision (c) continued the third clause of subdivision (15) of former Probate Code Section 1120.2 without substantive change, except that the limitation on releasing claims only to the extent that they were uncollectible was not continued. For background on the provisions of this division, see the Comment to this division under the division heading.

§ 16243. Payment of taxes, trustee's compensation, and other expenses

Comment. Section 16243 continues Section 16243 of the repealed Probate Code without change. The section is the same in substance as Section 3(c)(20) of the Uniform Trustees' Powers Act (1964). As to the construction of provisions drawn from uniform acts, see Section 2. For other provisions relating to trustees' compensation, see Sections 15680-15683. See also Section 16202 (exercise of powers is subject to duties).

Background on Section 16243 of Repealed Code

Section 16243 was added by 1986 Cal. Stat. ch. 820 § 40. The section continued subdivision (16) of former Probate Code Section 1120.2 (repealed by 1986 Cal. Stat. ch. 820 § 31) without substantive change, except that the references to reasonable compensation and compensation of employees and agents were new. For background on the provisions of this division, see the Comment to this division under the division heading.

§ 16244. Loans to beneficiary

Comment. Section 16244 continues Section 16244 of the repealed Probate Code without change. The determination of what is fair and reasonable is subject to the fiduciary duties of the trustee and must be made in light of the purposes of the trust. If the trustee requires security for the loan to the beneficiary, adequate security under this section may consist of a charge on the beneficiary's interest in the trust. See Restatement (Second) of Trusts § 255 (1957). The interest of a beneficiary that is subject to a spendthrift restraint may not be used for security for a loan under this section. See Section 15300 et seq. (restraints on transfer). See also Section 16202 (exercise of powers is subject to duties).

Background on Section 16244 of Repealed Code

Section 16244 was a new provision added by 1986 Cal. Stat. ch. 820 § 40. For background on the provisions of this division, see the Comment to this division under the division heading.

§ 16245. Distribution to beneficiaries under legal disability

Comment. Section 16245 continues Section 16245 of the repealed Probate Code without change. This section is drawn from Section 3(c)(22) of the Uniform Trustees' Powers Act (1964). As to the construction of provisions drawn from uniform acts, see Section 2. The exercise of the power to distribute property under this section is subject to the limitation provided in Section 21524(b) in the case of a marital deduction trust. See also Section 16202 (exercise of powers is subject to duties). In an appropriate case, a distribution may be made to a custodian under the California Uniform Transfers to Minors Act. See Sections 3905 (transfer authorized by trust), 3906 (other transfer by trustee).

Background on Section 16245 of Repealed Code

Section 16245 was a new provision added by 1986 Cal. Stat. ch. 820 § 40. For background on the provisions of this division, see the Comment to this division under the division heading.

§ 16246. Nature and value of distributions

Comment. Section 16246 continues Section 16246 of the repealed Probate Code without change. The first sentence is the same as Section 3(c)(23) of the Uniform Trustees' Powers Act (1964). As to the construction of provisions drawn from uniform acts, see Section 2. The trustee also has the power to sell property in order to make the distribution. The second sentence recognizes the authority to take gains and losses into account for tax purposes when making distributions. This power provides needed flexibility and avoids the possibility of a taxable event arising from a non-pro rata distribution. See also Section 16202 (exercise of powers is subject to duties).

Background on Section 16246 of Repealed Code

Section 16246 was a new provision added by 1986 Cal. Stat. ch. 820 § 40. For background on the provisions of this division, see the Comment to this division under the division heading.

§ 16247. Hiring persons

Comment. Section 16247 continues Section 16247 of the repealed Probate Code without change. This section is the same in substance as part of Section 3(c)(24) of the Uniform Trustees' Powers Act (1964). As to the construction of provisions drawn from uniform acts, see Section 2. If the trustee is in doubt concerning the propriety of hiring an agent, the judicial procedure for obtaining instructions is available. See Section 17200(b)(6). An agent with a close relationship with the trustee or an insider may be hired when it is in the best interests of the trust, taking into account the duty of loyalty (see Section 16002) and the duty to avoid conflicts of interest (see Section 16004), and particularly as to routine matters; but in situations involving substantial matters, it is best to hire outside agents. The trustee has a duty to inform certain beneficiaries of agents hired, their relationship to the trustee, if any, and their compensation. See Section 16063(d). See also Sections 16012 (duty not to delegate), 16014 (duty to use special skills), 16202 (exercise of powers is subject to duties), 16401 (trustee's liability to beneficiary for acts of agent).

Background on Section 16247 of Repealed Code

Section 16247 was a new provision added by 1986 Cal. Stat. ch. 820 § 40. For background on the provisions of this division, see the Comment to this division under the division heading.

§ 16248. Execution and delivery of instruments

Comment. Section 16248 continues Section 16248 of the repealed Probate Code without change. This section is the same in substance as Section 3(c)(26) of the Uniform Trustees' Powers Act (1964). As to the construction of provisions drawn from uniform acts, see Section 2. See also Section 16202 (exercise of powers is subject to duties).

Background on Section 16248 of Repealed Code

Section 16248 was a new provision added by 1986 Cal. Stat. ch. 820 § 40. For background on the provisions of this division, see the Comment to this division under the division heading.

§ 16249. Actions and proceedings

Comment. Section 16249 continues Section 16249 of the repealed Probate Code without change. This section is the same in substance as Section 3(c)(25) of the Uniform Trustees' Powers Act (1964). As to the construction of provisions drawn from uniform acts, see Section 2. As to the propriety of reimbursement for attorney's fees and other expenses of an action or proceeding, see Section 15684 and the Comment thereto. See also Sections 62 ("property" defined), 16010 (duty to enforce claims), 16011 (duty to defend actions), 16202 (exercise of powers is subject to duties).

Background on Section 16249 of Repealed Code

Section 16249 was added by 1986 Cal. Stat. ch. 820 § 40. The section superseded the last clause of subdivision (15) of former Probate Code Section 1120.2 (repealed by 1986 Cal. Stat. ch. 820 § 31). For background on the provisions of this division, see the Comment to this division under the division heading.

CHAPTER 3. REVISED UNIFORM PRINCIPAL AND INCOME ACT

§ 16300. Short title

Comment. Section 16300 continues Section 16300 of the repealed Probate Code without change.

Background on Section 16300 of Repealed Code

Section 16300 was added by 1986 Cal. Stat. ch. 820 § 40. The section continued former Civil Code Section 730 (repealed by 1986 Cal. Stat. ch. 820 § 2) without change. For background on the provisions of this division, see the Comment to this division under the division heading.

§ 16301. Definitions

Comment. Section 16301 continues Section 16301 of the repealed Probate Code without change. See also Section 84 ("trustee" defined).

Background on Section 16301 of Repealed Code

Section 16301 was added by 1986 Cal. Stat. ch. 820 § 40. Subdivisions (a) and (b) continued subdivisions (1) and (2) of former Civil Code Section 730.01 (repealed by 1986 Cal. Stat. ch. 820 § 2) without change. Subdivision (c) restated subdivision (3) of

former Civil Code Section 730.01 (which defined "remainderman") without substantive change and with the addition of the language "presently or in the future." For background on the provisions of this division, see the Comment to this division under the division heading.

§ 16302. Duty of trustee as to receipts and expenditures

Comment. Section 16302 continues Section 16302 of the repealed Probate Code without change. Subdivision (b) substitutes a reference to improper exercise of discretion for the reference in Section 2 of the Revised Uniform Principal and Income Act (1962) to "imprudence or partiality." This variation of the language of the Uniform Act was drawn from Nebraska Law. Neb. Rev. Stat. § 30-3102 (1985). The result of this change is that there is no inference of any sort of impropriety, not just imprudence or partiality, arising from an allocation contrary to this chapter.

Background on Section 16302 of Repealed Code

Section 16302 was added by 1986 Cal. Stat. ch. 820 § 40. The section continued former Civil Code Section 730.02 (repealed by 1986 Cal. Stat. ch. 820 § 2) with two changes: Subdivision (a)(3) adopted the revised general standard of care provided in Section 16040 in place of the former reference to ordinary prudence, discretion, and judgment. Subdivision (b) replaced the former reference to "imprudence or partiality" with a reference to improper exercise of discretion. For background on the provisions of this division, see the Comment to this division under the division heading.

§ 16303. Income and principal

Comment. Section 16303 continues Section 16303 of the repealed Probate Code without change.

Background on Section 16303 of Repealed Code

Section 16303 was added by 1986 Cal. Stat. ch. 820 § 40 and amended by 1987 Cal. Stat. ch. 128 § 17. The section restated subdivisions (a) and (b) of former Civil Code Section 730.03 (repealed by 1986 Cal. Stat. ch. 820 § 2) without substantive change. Subdivisions (a)(3) and (b)(4) were new cross-references, but represented no substantive change. Subdivision (a)(6) corrected a defect in former law. For background on the provisions of this division, see the Comment to this division under the division heading.

§ 16304. When right to income arises; apportionment of income

Comment. Section 16304 continues Section 16304 of the repealed Probate Code without change. For accrual of interest on unpaid distributions of current income, see Section 16314 (interest on trust distributions). As to the applicability of the 1988 changes made in Section 16304 to a trust created before July 1, 1989, see Section 16315. As to the application of any amendments made after that date, see Section 3.

Background on Section 16304 of Repealed Code

Section 16304 was added by 1986 Cal. Stat. ch. 820 § 40 and was amended by 1987 Cal. Stat. ch. 923 § 100 and by 1988 Cal. Stat. ch. 1199 § 106. The section continued

former Civil Code Section 730.04 (repealed by 1986 Cal. Stat. ch. 820 § 2) without substantive change, except that subdivision (b)(2) was conformed to Section 4(b)(2) of the Revised Uniform Principal and Income Act (1962) and references to the testator and the will were replaced. As to the construction of provisions drawn from uniform acts, see Section 2. The first change—contrary to the former rule—required apportionment of rent, interest, and annuities. The effect of the last change was to make the principles of this section applicable to the problem of apportionment of income following the death of a settlor of a revocable living trust. The references to "assets" in former Civil Code Section 730.04 were replaced with references to "property"; these are non-substantive changes. See Section 62 ("property" defined). For background on the provisions of this division, see the Comment to this division under the division heading.

The 1987 amendment revised subdivision (d) to recognize a QTIP election under Section 21524(d). See *Recommendation Relating to Marital Deduction Gifts*, 19 Cal. L. Revision Comm'n Reports 615, 633-34 (1988).

The 1988 amendment revised subdivision (a) of Section 16304 to make clear that the rules governing accrual of income on testamentary distributions in trust during an intervening period of estate administration are the rules applicable to estate administration. The 1988 amendment also added subdivision (f) to fill in a gap in the law and made technical revisions in subdivision (d).

§ 16305. Income earned during administration of decedent's estate

Comment. Section 16305 continues Section 16305 of the repealed Probate Code without change. As to the applicability of the 1988 changes made in Section 16305 to a trust created before July 1, 1989, see Section 16315. As to the application of any amendments made after that date, see Section 3.

Background on Section 16305 of Repealed Code

Section 16305 was added by 1986 Cal. Stat. ch. 820 § 40 and was amended by 1988 Cal. Stat. ch. 1199 § 106.5. Subdivision (a) continued subdivisions (a) and (b) of former Civil Code Section 730.05 (repealed by 1986 Cal. Stat. ch. 820 § 2) without change. The reference to "assets" in former Civil Code Section 730.05 was replaced with a reference to "property"; this was a non-substantive change. See Section 62 ("property" defined). Subdivision (b) continued former Civil Code Section 730.05(c) without change. For background on the provisions of this division, see the Comment to this division under the division heading.

The 1988 amendment to Section 16305 corrected a section reference in subdivision (a). The amendment also revised subdivision (b) to reflect the repeal of separate probate administration provisions relating to interest on the share of a trust beneficiary; these provisions were superseded by Sections 16304 (when right to income arises) and 16314 (interest on trust distributions).

§ 16306. Corporate distributions

Comment. Section 16306 continues Section 16306 of the repealed Probate Code without change.

Background on Section 16306 of Repealed Code

Section 16306 was added by 1986 Cal. Stat. ch. 820 § 40. Subdivisions (a), (b), (d), and (e) continued subdivisions (a), (b), (d), and (e). respectively, of former Civil Code Section 730.06 (repealed by 1986 Cal. Stat. ch. 820 § 2) without change. Subdivision

(c) restated former Civil Code Section 730.06(c) without substantive change. For background on the provisions of this division, see the Comment to this division under the division heading.

§ 16307. Bonds and other obligations for payment of money

Comment. Section 16307 continues Section 16307 of the repealed Probate Code without change.

Background on Section 16307 of Repealed Code

Section 16307 was added by 1986 Cal. Stat. ch. 820 § 40. The section continued former Civil Code Section 730.07 (repealed by 1986 Cal. Stat. ch. 820 § 2) without change. For background on the provisions of this division, see the Comment to this division under the division heading.

§ 16308. Business and farming operations

Comment. Section 16308 continues Section 16308 of the repealed Probate Code without change. The last sentence of subdivision (a) is drawn from statutes in Nebraska and Wisconsin. Neb. Rev. Stat. § 30-3109 (1985); Wis. Stat. Ann. 701.20(8) (West 1981). The reference to "recognized methods of accounting" is drawn from the Nebraska statute. Neb. Rev. Stat. § 30-3109 (1985). This reference replaces the term of art "generally accepted accounting principles" which may be inappropriate as applied to certain types of businesses, such as agricultural and farming operations.

Background on Section 16308 of Repealed Code

Section 16308 was added by 1986 Cal. Stat. ch. 820 § 40. For background on the provisions of this division, see the Comment to this division under the division heading.

Section 16308 continued subdivisions (a) and (c) of former Civil Code Section 730.08 (repealed by 1986 Cal. Stat. ch. 820 § 2) without substantive change, except for two important changes:

(1) The last sentence of subdivision (a) reversed the former rule against carrying losses forward. This revision is drawn from statutes in Nebraska and Wisconsin. Neb. Rev. Stat. § 30-3109 (1985); Wis. Stat. Ann. 701.20(8) (West 1981).

(2) The reference in former law to "generally accepted accounting principles" was replaced with a reference to "recognized methods of accounting." This change avoids use of the term of art "generally accepted accounting principles" which may be inappropriate as applied to certain types of businesses, such as agricultural and farming operations. This revision is drawn from the Nebraska statute. Neb. Rev. Stat. § 30-3109 (1985).

§ 16309. Natural resources

Comment. Section 16309 continues Section 16309 of the repealed Probate Code without change. See Sections 16080-16081 (duties with regard to discretionary powers). For the rule governing property subject to depletion that is not covered by Section 16309, see Section 16310.

Background on Section 16309 of Repealed Code

Section 16309 was added by 1986 Cal. Stat. ch. 820 § 40. For background on the provisions of this division, see the Comment to this division under the division heading.

Section 16309 continued former Civil Code Section 730.09 (repealed by 1986 Cal. Stat. ch. 820 § 2) with two changes:

(1) In subdivision (a)(3) the reference to "absolute discretion" was revised to read "discretion"; this revision made no substantive change. See Sections 16080-16081 (duties with regard to discretionary powers).

(2) The former reference to 27 and one-half percent of gross receipts in subdivision (a)(3) was replaced with a standard tied to federal tax law.

§ 16310. Other property subject to depletion

Comment. Section 16310 continues Section 16310 of the repealed Probate Code without change. See Sections 16080-16081 (duties with regard to discretionary powers).

Background on Section 16310 of Repealed Code

Section 16310 was added by 1986 Cal. Stat. ch. 820 § 40. The section continued former Civil Code Sections 730.10 (timber) and 730.11 (other property subject to depletion) (provisions repealed by 1986 Cal. Stat. ch. 820 § 2), except that the reference to "absolute discretion" was revised to read "discretion." This revision made no substantive change. See Sections 16080-16081 (duties with regard to discretionary powers). For background on the provisions of this division, see the Comment to this division under the division heading.

§ 16311. Underproductive property

Comment. Section 16311 continues Section 16311 of the repealed Probate Code without change. Subdivision (d) resolves the conflict between the portfolio approach to investment decisions provided in Section 16040(b) and the underproductive property provision of Section 16311 as it applies to securities.

Background on Section 16311 of Repealed Code

Section 16311 was added by 1986 Cal. Stat. ch. 820 § 40. Subdivisions (a), (b), and (c) continued former Civil Code Section 730.12 (repealed by 1986 Cal. Stat. ch. 820 § 2) without change. Subdivision (d) was a new provision. For background on the provisions of this division, see the Comment to this division under the division heading.

§ 16312. Charges against income and principal

Comment. Section 16312 continues Section 16312 of the repealed Probate Code without change. See Sections 16080-16081 (duties with regard to discretionary powers), 17200 et seq. (judicial proceedings concerning trusts).

Background on Section 16312 of Repealed Code

Section 16312 was added by 1986 Cal. Stat. ch. 820 § 40. For background on the provisions of this division, see the Comment to this division under the division heading.

Subdivision (a) continued subdivision (c) of former Civil Code Section 730.03 (repealed by 1986 Cal. Stat. ch. 820 § 2) without substantive change. Subdivisions (b)-(e) continued former Civil Code Section 730.13 (repealed by 1986 Cal. Stat. ch. 820 § 2) with the following changes:

(1) The reference to "absolute discretion" was revised to read "discretion"; this revision made no substantive change. See Sections 16080-16081 (duties with regard to discretionary powers).

(2) A reference to "proceeding" was added to subdivision (d)(2). See Section 17200 et seq. (judicial proceedings concerning trusts).

§ 16313. Reserve or allowance for depreciation or depletion

Comment. Section 16313 continues Section 16313 of the repealed Probate Code without change.

Background on Section 16313 of Repealed Code

Section 16313 was added by 1986 Cal. Stat. ch. 820 § 40. The section continued the first sentence and the first part of the second sentence of former Civil Code Section 730.14 (repealed by 1986 Cal. Stat. ch. 820 § 2) without substantive change. For background on the provisions of this division, see the Comment to this division under the division heading.

§ 16314. Income and interest on trust distributions

Comment. Section 16314 restates Section 16314 of the repealed Probate Code with a clarifying change in subdivision (b). Cf. Section 21120(b) ("pecuniary gift" defined). The rate of interest payable on trust distributions parallels that payable in probate administration. See Section 12001 (rate of interest). The trust instrument may vary the rules provided in this section. See Section 16302. As to the applicability of Section 16314 to a trust created before July 1, 1989, see Section 16315. As to the application of any amendments made after that date, see Section 3.

Background on Section 16314 of Repealed Code

Section 16314 was a new provision added by 1988 Cal. Stat. ch. 1199 § 107. For background on the provisions of this division, see the Comment to this division under the division heading.

§ 16315. Application of changes made in Sections 16304 and 16305 and of Section 16314 to trust created before July 1, 1989

Comment. Section 16315 continues Section 16315 of the repealed Probate Code with a technical change. Section 16315 is subject to contrary provisions in the trust instrument. See Section 16302 (duty of trustee as to receipts and expenditures).

Background on Section 16315 of Repealed Code

Section 16315 was a new provision added by 1988 Cal. Stat. ch. 1199 § 107.3. For background on this section, see *Communication from the California Law Revision Commission Concerning Assembly Bill 2841*, 19 Cal. L. Revision Comm'n Reports 1201, 1249 (1988).

CHAPTER 4. LIABILITY OF TRUSTEES TO BENEFICIARIES

Article 1. Liability for Breach of Trust

§ 16400. Breach of trust

Comment. Section 16400 continues Section 16400 of the repealed Probate Code without change. This section is drawn from Section 201 of the Restatement (Second) of Trusts (1957). While a trust is revocable, the trustee owes duties to the person holding the power to revoke and not to the named beneficiaries. See Section 15800; see also Section 15803 (holder of general power of appointment or power to withdraw property from trust treated as settlor).

Background on Section 16400 of Repealed Code

Section 16400 was a new provision added by 1986 Cal. Stat. ch. 820 § 40. The section superseded former Civil Code Section 2234 (repealed by 1986 Cal. Stat. ch. 820 § 7). For background on the provisions of this division, see the Comment to this division under the division heading.

§ 16401. Trustee's liability to beneficiary for acts of agent

Comment. Section 16401 continues Section 16401 of the repealed Probate Code without change.

Subdivisions (a) and (b) are drawn from Section 225 of the Restatement (Second) of Trusts (1957). Whether a trustee has acted reasonably under this section depends upon application of the standard of care provided in Section 16040. The trustee of a revocable trust is not liable where the agent's act is performed or omitted pursuant to the written instructions of the person having the power to revoke the trust. See Section 16462. Similarly, the trustee of a revocable trust is not liable for hiring an agent where the trustee is directed to do so in writing by the person having the power to revoke. See Section 16462. It should also be noted that the liability to beneficiaries does not include beneficiaries under a revocable trust during the time that the trust can be revoked. See Section 15800; see also Sections 15803 (holder of general power of appointment or power to withdraw property from trust treated as settlor), 16000 (duty to administer trust).

The six paragraphs of subdivision (b) state independent bases for imposition of liability on the trustee. For example, if the trustee has not used reasonable care in selecting or retaining an agent, the trustee may be held liable for the agent's breach under paragraph (3); but even if the trustee has no control over selection or retention of the agent, the trustee may still be held liable for the agent's breach under paragraph (1) if the trustee has the power to direct the agent's actions. It should also be noted

that paragraphs (2), (5), and (6) of subdivision (b) apply regardless of whether the trustee has any control over the agent.

Subdivision (c) preserves the prior law governing the trustee's liability for acts or omissions of agents occurring before July 1, 1987.

Background on Section 16401 of Repealed Code

Section 16401 was a new provision added by 1986 Cal. Stat. ch. 820 § 40. The former statutes did not provide a rule governing the trustee's liability for the acts or omissions of agents of the trust. For background on the provisions of this division, see the Comment to this division under the division heading.

§ 16402. Trustee's liability to beneficiary for acts of cotrustee

Comment. Section 16402 continues Section 16402 of the repealed Probate Code without change. Subdivisions (a) and (b) are drawn from Section 224 of the Restatement (Second) of Trusts (1957).

Subdivision (b)(5) is consistent with the prior case-law rule. See Estate of Hensel, 144 Cal. App. 2d 429, 438, 301 P.2d 105 (1956) (citing the rule from the first Restatement). See also Blackmon v. Hale, 1 Cal. 3d 548, 559, 463 P.2d 418, 83 Cal. Rptr. 194 (1970) (negligent inattention to duties).

For the duty of a trustee with respect to cotrustees, see Section 16013. It should also be noted that the liability to beneficiaries does not include beneficiaries under revocable trusts during the time that the trust can be revoked. See Section 15800; see also Sections 15803 (holder of general power of appointment or power to withdraw property from trust treated as settlor), 16000 (duty to administer trust).

Subdivision (c) preserves the prior law governing the trustee's liability for acts or omissions of cotrustees occurring before July 1, 1987.

Background on Section 16402 of Repealed Code

Section 16402 was added by 1986 Cal. Stat. ch. 820 § 40. For background on the provisions of this division, see the Comment to this division under the division heading.

Section 16402 restated the substance of former Civil Code Section 2239 (repealed by 1986 Cal. Stat. ch. 820 § 7) as follows:

(1) The substance of the former liability for consenting to wrongful acts of the cotrustee was restated in subdivision (b)(3).

(2) The substance of the former liability for negligently enabling the cotrustee to commit a breach was restated in subdivision (b)(4).

(3) The substance of the former statement that the trustee was liable "for no others" was restated in subdivision (a).

§ 16403. Trustee's liability to beneficiary for acts of predecessor

Comment. Section 16403 continues Section 16403 of the repealed Probate Code without change. Subdivisions (a) and (b) are the same in substance as Section 223 of the Restatement (Second) of Trusts (1957), except that the language relating to what the trustee should have known

in subdivisions (b)(1) and (b)(3) differs from the Restatement. In certain circumstances it may not be reasonable to enforce a claim against a former trustee, depending upon the likelihood of recovery and the cost of suit and enforcement. It should also be noted that the liability to beneficiaries does not include beneficiaries under revocable trusts during the time that the trust can be revoked. See Section 15800; see also Section 15803 (holder of general power of appointment or power to withdraw property from trust treated as settlor). For provisions permitting a trustee to be relieved of liability for acts of a predecessor trustee, see Sections 16463 (consent), 16464 (release), 16465 (affirmance).

Subdivision (c) preserves the prior law governing the trustee's liability for acts or omissions of a predecessor trustee occurring before July 1, 1987.

Background on Section 16403 of Repealed Code

Section 16403 is a new provision added by 1986 Cal. Stat. ch. 820 § 40. For background on the provisions of this division, see the Comment to this division under the division heading.

Article 2. Remedies for Breach of Trust

§ 16420. Remedies for breach of trust

Comment. Section 16420 continues Section 16420 of the repealed Probate Code without change.

Subdivision (a) codifies in general terms the remedies available to a beneficiary or cotrustee where a trustee has committed a breach of trust or threatens to do so. For the applicable procedure, see Section 17200 et seq. (judicial proceedings concerning trusts). As provided in subdivision (b), the list of remedies in subdivision (a) is not necessarily exclusive and is not intended to prevent resort to any other appropriate remedy. See Section 15002 (common law as law of state); Penal Code § 506 (embezzlement by trustee); People v. Stanford, 16 Cal. 2d 247, 105 P.2d 969 (1940) (embezzlement); see also Section 16421 (remedies are exclusively equitable). The petitioner may seek any one or more of the remedies as is appropriate in the circumstances of the case. Section 16420 provides a general list of remedies and does not attempt to set out the refinements and exceptions developed over many years by the common law. The availability of a particular remedy listed in Section 16420, and its application under the circumstances, are governed by the common law. See Section 15002 (common law as law of state).

As to paragraph (1) of subdivision (a) of Section 16420, see Bacon v. Grosse, 165 Cal. 481, 132 P. 1027 (1913); Restatement (Second) of Trusts § 199(a) (1957).

Paragraph (2) is consistent with other statutes. See Civil Code § 3422; Code Civ. Proc. § 526; see also Quist v. Empire Water Co., 204 Cal. 646, 269 P. 533 (1928); St. James Church of Christ Holiness v. Superior Court, 135 Cal. App. 2d 352, 359-62, 287 P.2d 387 (1955); Restatement (Second) of Trusts § 199(b) (1957).

The reference to payment of money in paragraph (3) is comprehensive and includes liability that might be characterized as damages, restitution, or surcharge. For the measure of liability, see Article 3 (commencing with Section 16440). The characterization of monetary liability does not affect the fact that the remedies for breach of trust are exclusively equitable, as provided in Section 16421. In certain circumstances, rather than ordering the payment of money, it may be appropriate for the court to order the trustee to transfer tangible property as a remedy for breach of trust. See also Restatement (Second) of Trusts § 199(c) (1957).

Paragraph (4) provides explicit authority for the appointment of a receiver. See Code Civ. Proc. § 564(1), (8); Bowles v. Superior Court, 44 Cal. 2d 574, 583-84, 283 P.2d 704 (1955) (appointment of receiver pending removal of trustees and as temporary trustee); see also Restatement (Second) of Trusts § 199(d) (1957). Paragraph (4) also permits appointment of a temporary trustee where appointment of a receiver would be appropriate. See Sections 15660 (appointment of trustee to fill vacancy), 17206 (authority to make necessary orders and appoint temporary trustee).

As to paragraph (5), see Restatement (Second) of Trusts § 199(e) (1957). For provisions governing removal of trustees, see Sections 15642 (grounds for removal), 15644 (delivery of property by removed trustee), 17200(b)(10) (petition for removal).

The authority under paragraph (6) to set aside wrongful acts of the trustee is a corollary of the power to enjoin a threatened breach as provided in paragraph (2). As recognized in the introductory clause of paragraph (6), the wrongful acts of the trustee may not be set aside if to do so would impair the rights of bona fide purchasers. See also G. Bogert, The Law of Trusts and Trustees § 861, at 16-17 (rev. 2d ed. 1982).

Paragraph (7) is drawn from Section 243 of the Restatement (Second) of Trusts (1957). Prior California statutes provided only for the determination of reasonable compensation and for the allowance of greater compensation under appropriate circumstances. See former Civil Code § 2274 (repealed by 1986 Cal. Stat. ch. 820 § 7); former Prob. Code §§ 1122, 1138.1(a)(7) (provisions repealed by 1986 Cal. Stat. ch. 820 § 31).

Paragraph (8) states a general rule recognized in California cases. See, e.g., Citizens' Bank v. Rucker, 138 Cal. 606, 609-10, 72 P. 46 (1903); see also Restatement (Second) of Trusts § 202 (1957). The introductory clause recognizes that this remedy is limited by the rights of bona fide purchasers as provided in Section 18100.

Paragraph (9) is consistent with California case law. See Noble v. Noble, 198 Cal. 129, 135, 243 P. 439 (1926); Keeney v. Bank of Italy, 33 Cal. App. 515, 517, 165 P. 735 (1917); People v. California Safe Deposit & Trust Co., 175 Cal. 756, 759-60, 167 P. 388 (1917); Church v. Bailey, 90 Cal. App. 2d 501, 504, 203 P.2d 547 (1949); Carlin v. Masten, 118 Cal. App. 373, 376-77, 5 P.2d 65 (1931). The introductory clause recognizes that this remedy is limited by the rights of bona fide purchasers as provided in Section 18100.

Background on Section 16420 of Repealed Code

Section 16420 was added by 1986 Cal. Stat. ch. 820 § 40. Paragraph (1) of subdivision (a) superseded a part of former Civil Code Sections 863 (repealed by 1986 Cal. Stat. ch. 820 § 5) (beneficiary may "enforce the performance of the trust") and 2251 (repealed by 1986 Cal. Stat. ch. 820 § 7) (beneficiary may "take advantage" of trust). Paragraph (2) was new. Paragraph (3) restated the general liability provided in former Civil Code Sections 2236-2238 and 2262 (provisions repealed by 1986 Cal. Stat. ch. 820 § 7). Paragraph (4) was new. Paragraph (5) restated in general terms the authority to remove a trustee for breach of trust provided by former Civil Code Section 2283 (repealed by 1986 Cal. Stat. ch. 820 § 7) and former Probate Code Section 1123.5 (repealed by 1986 Cal. Stat. ch. 820 § 31). Paragraphs (6)-(9) were new. For background on the provisions of this division, see the Comment to this division under the division heading.

§ 16421. Remedies for breach exclusively in equity

Comment. Section 16421 continues Section 16421 of the repealed Probate Code without change. This section is drawn from Section 197 of the Restatement (Second) of Trusts (1957). For a list of remedies, see Section 16420. Under this section, for example, the beneficiary may not commence an action against the trustee for breach of contract. See Restatement (Second) of Trusts § 197 comment b (1957). However, the trustee may be found liable for the payment of money on account of the breach. See Sections 16420(a)(3) (compelling payment of money for breach of trust), 16440-16441 (measure of liability for breach of trust).

Background on Section 16421 of Repealed Code

Section 16421 was a new provision added by 1986 Cal. Stat. ch. 820 § 40. For background on the provisions of this division, see the Comment to this division under the division heading.

Article 3. Measure of Liability for Breach of Trust

§ 16440. Measure of liability for breach of trust

Comment. Section 16440 continues Section 16440 of the repealed Probate Code without change. Subdivision (a) is drawn from Section 205 of the Restatement (Second) of Trusts (1957). See also Section 16040(b) (propriety of considering investments as part of an overall investment strategy).

Subdivision (b) codifies the good faith exception to the general liability rules found in the Restatement. See Restatement (Second) of Trusts § 205 comment g (1957). This rule supersedes subdivision (a) of former Civil Code Section 2238 and represents an expansion of the rule in Estate of Talbot, 141 Cal. App. 2d 309, 320-27, 296 P.2d 848 (1956). In *Talbot,* liability for appreciation damages was excused on the grounds of good faith, but the trustee was liable for the breach in the amount of the loss to the corpus plus interest.

Background on Section 16440 of Repealed Code

Section 16440 was added by 1986 Cal. Stat. ch. 820 § 40. Subdivision (a) superseded former Civil Code Sections 2237 and 2238 (provisions repealed by 1986 Cal. Stat. ch. 820 § 7). Subdivision (b) superseded subdivision (a) of former Civil Code Section 2238. For background on the provisions of this division, see the Comment to this division under the division heading.

§ 16441. Measure of liability for interest

Comment. Section 16441 continues Section 16441 of the repealed Probate Code without change. Under subdivision (a), the legal rate of interest on judgments in effect when the liability accrued is applied. Thus, the rate is 7 percent per year until January 1, 1983, when the interest rate on judgments was raised to 10 percent per year. See Code Civ. Proc. § 685.010; American Nat'l Bank v. Peacock, 165 Cal. App. 3d 1206, 1210-12, 212 Cal. Rptr. 97 (1985). Notwithstanding Section 16442, interest is not compounded under the Trust Law as it was under former Civil Code Section 2262. For example, if a trustee is found liable for a breach of trust that occurred in 1980 and is charged with interest at the rate provided in subdivision (a) of Section 16441, interest is determined at the rate of 7 percent from 1980 until December 31, 1982, and then at the rate of 10 percent from January 1, 1983, until the date of judgment. After judgment, interest accrues at the rate of 10 percent pursuant to Code of Civil Procedure Section 685.010.

Background on Section 16441 of Repealed Code

Section 16441 was added by 1986 Cal. Stat. ch. 820 § 40 and was amended by 1987 Cal. Stat. ch. 128 § 18. The section superseded former Civil Code Section 2262 (liability for interest upon failure to properly invest trust funds) and part of former Civil Code Section 2237 (liability for interest on proceeds) (provisions repealed by 1986 Cal. Stat. ch. 820 § 7).

The 1987 amendment clarified the interest rate applicable to a determination of liability for a breach occurring before the operative date of this division.

For background on the provisions of this division, see the Comment to this division under the division heading.

§ 16442. Other remedies not affected

Comment. Section 16442 continues Section 16442 of the repealed Probate Code without change. This section makes clear that Sections 16440 and 16441 do not prevent resort to any other remedy available against the trustee under the statutory or common law. See Section 15002 (common law as law of state); see also Section 16420 (remedies for breach of trust).

Background on Section 16442 of Repealed Code

Section 16442 was a new provision added by 1986 Cal. Stat. ch. 820 § 40. For background on the provisions of this division, see the Comment to this division under the division heading.

Article 4. Limitations and Exculpation

§ 16460. Limitations on proceedings against trustee

Comment. Section 16460 continues Section 16460 of the repealed Probate Code with the omission of subdivision (c). The omitted subdivision (which provided that a claim arising before July 1, 1987, was not barred by Section 16460 until July 1, 1988) has been omitted as obsolete.

Section 16460 is drawn in part from Section 7-307 of the Uniform Probate Code (1987). As to the construction of provisions drawn from uniform acts, see Section 2. For provisions governing consent, release, and affirmance by beneficiaries to relieve the trustee of liability, see Sections 16463-16465. The reference in the introductory clause to claims "otherwise" barred also includes principles such as estoppel and laches that apply under the common law. See Section 15002 (common law as law of state). See also Sections 16461 (exculpation of trustee by provision in trust instrument), 16462 (nonliability for following instructions under revocable trust). During the time that a trust is revocable, the person holding the power to revoke is the one who must receive the account or report in order to commence the running of the limitations period provided in this section. See Sections 15800 (limits on rights of beneficiary of revocable trust), 16064(b) (exception to duty to account). Under prior law, the four-year limitations period provided in Code of Civil Procedure Section 343 was applied to actions for breach of express trusts. See Cortelyou v. Imperial Land Co., 166 Cal. 14, 20, 134 P. 981 (1913); Oeth v. Mason, 247 Cal. App. 2d 805, 811-12, 56 Cal.

Rptr. 69 (1967). Section 16460 is an exception to the four-year rule provided in Code of Civil Procedure Section 343.

Subdivision (b) provides special rules concerning who must receive the account or report for it to have the effect of barring claims based on the information disclosed. Under subdivision (b)(2) it may be appropriate to seek the appointment of a guardian ad litem or some other person to receive accounts and reports where no conservator has been appointed for the person and there is serious doubt that the beneficiary can understand the account or report. See Section 1003 (guardian ad litem).

For provisions relating to the duty to report information and account to beneficiaries, see Sections 16060-16064.

Background on Section 16460 of Repealed Code

Section 16460 was added by 1986 Cal. Stat. ch. 820 § 40. The section superseded the provisions of former Civil Code Section 2282 (repealed by 1986 Cal. Stat. ch. 820 § 7) relating to discharge of trustees. For background on the provisions of this division, see the Comment to this division under the division heading.

§ 16461. Exculpation of trustee

Comment. Section 16461 continues Section 16461 of the repealed Probate Code without change. This section is the same in substance as part of Section 222 of the Restatement (Second) of Trusts (1957), except that the reference to gross negligence does not appear in the Restatement. For special provisions applicable to revocable trusts, see Section 16462. Although a trust may not exculpate a trustee from liability for a profit from a breach, as provided in clause (2) of subdivision (b), the trust may limit the trustee's duties with the effect that the trustee does not commit a breach in that area. However, it is against public policy to attempt to eliminate liability for profits derived from a breach of a duty that the trustee does have. See Restatement (Second) of Trusts § 222 comments b & c (1957).

Background on Section 16461 of Repealed Code

Section 16461 was a new provision added by 1986 Cal. Stat. ch. 820 § 40. For background on the provisions of this division, see the Comment to this division under the division heading.

§ 16462. Nonliability for following instructions under revocable trust

Comment. Section 16462 continues Section 16462 of the repealed Probate Code without change. See also Section 16001 (trustee's duty to follow written directions under revocable trust).

Background on Section 16462 of Repealed Code

Section 16462 was added by 1986 Cal. Stat. ch. 820 § 40. The section restated subdivision (b) of former Civil Code Section 2258 (repealed by 1986 Cal. Stats. ch.

820 § 7), insofar as it concerned the trustee's liability under a revocable trust, without substantive change. Section 16462 also restated subdivision (b) of former Civil Code Section 2238 (repealed by 1986 Cal. Stats. ch. 820 § 7) without substantive change. For background on the provisions of this division, see the Comment to this division under the division heading.

§ 16463. Consent of beneficiary to relieve trustee of liability for breach of trust

Comment. Section 16463 continues Section 16463 of the repealed Probate Code without substantive change. This section is the same in substance as Section 216 of the Restatement (Second) of Trusts (1957). See also Sections 16460 (limitations on proceedings against trustee), 16464 (release), 16465 (affirmance). As to other rules that may limit the trustee's liability, see the Comment to Section 16460.

Background on Section 16463 of Repealed Code

Section 16463 was a new provision added by 1986 Cal. Stat. ch. 820 § 40. The section superseded provisions relating to beneficiaries' consent to relieve a trustee of liability that appeared in former Civil Code Sections 2230, 2232, and 2282(d) (provisions repealed by 1986 Cal. Stats. ch. 820 § 7). For background on the provisions of this division, see the Comment to this division under the division heading.

§ 16464. Discharge of trustee's liability by release or contract

Comment. Section 16464 continues Section 16464 of the repealed Probate Code without change. This section is the same in substance as Section 217 of the Restatement (Second) of Trusts (1957). See also Sections 16460 (limitations on proceedings against trustee), 16463 (consent), 16465 (affirmance). As to other rules that may limit the trustee's liability, see the Comment to Section 16460.

Background on Section 16464 of Repealed Code

Section 16464 was a new provision added by 1986 Cal. Stat. ch. 820 § 40. The section superseded former Civil Code Section 2230 (repealed by 1986 Cal. Stats. ch. 820 § 7) to the extent that section governed release. For background on the provisions of this division, see the Comment to this division under the division heading.

§ 16465. Discharge of trustee's liability by subsequent affirmance

Comment. Section 16465 continues Section 16465 of the repealed Probate Code without change. This section is the same in substance as Section 218 of the Restatement (Second) of Trusts (1957). See also Sections 16460 (limitations on proceedings against trustee), 16463 (consent), 16464 (release). As to other rules that may limit the trustee's liability, see the Comment to Section 16460.

Background on Section 16465 of Repealed Code

Section 16465 was a new provision added by 1986 Cal. Stat. ch. 820 § 40. For background on the provisions of this division, see the Comment to this division under the division heading.

PART 5. JUDICIAL PROCEEDINGS CONCERNING TRUSTS

CHAPTER 1. JURISDICTION AND VENUE

§ 17000. Subject matter jurisdiction

Comment. Section 17000 continues Section 17000 of the repealed Probate Code without change. Subdivision (a) is drawn from the first sentence of Section 7-201(a) of the Uniform Probate Code (1987). Subdivision (a) provides for exclusive jurisdiction in the superior court in matters involving the internal affairs of trusts. See Chapter 3 (commencing with Section 17200). It is intended that the department of the superior court that customarily deals with probate matters will exercise the exclusive jurisdiction relating to internal trust affairs provided by subdivision (a). This department of the superior court is not a court of limited power. See Section 17001 (superior court sitting in probate is full-power court). Subdivision (b) is drawn from Section 7-204 of the Uniform Probate Code (1987). As to the construction of provisions drawn from uniform acts, see Section 2.

Background on Section 17000 of Repealed Code

Section 17000 was added by 1986 Cal. Stat. ch. 820 § 40. Subdivision (a) superseded former Probate Code Section 1123.7 (repealed by 1986 Cal. Stat. ch. 820 § 31). Jurisdiction was in the superior court under former Probate Code Section 1138.3 (repealed by 1986 Cal. Stat. ch. 820 § 31). Subdivision (b) was new. For background on the provisions of this division, see the Comment to this division under the division heading.

§ 17001. Full-power court

Comment. Section 17001 continues Section 17001 of the repealed Probate Code without change. This section makes clear that the department of the superior court exercising the exclusive jurisdiction to determine internal trust affairs provided by Section 17000(a) has all the powers of the superior court when exercising its general jurisdiction. Hence, while not intending to disrupt the traditional division of business among different departments of the superior court, this section rejects the limitation on the powers of the probate court that has been cited in appellate decisions. See, e.g., Copley v. Copley, 80 Cal. App. 3d 97, 106-07, 145 Cal. Rptr. 437 (1978).

Background on Section 17001 of Repealed Code

Section 17001 was a new provision added by 1986 Cal. Stat. ch. 820 § 40. For background on the provisions of this division, see the Comment to this division under the division heading.

§ 17002. Principal place of administration of trust

Comment. Section 17002 continues Section 17002 of the repealed Probate Code without change.

Background on Section 17002 of Repealed Code

Section 17002 was added by 1986 Cal. Stat. ch. 820 § 40. The section superseded the second and third sentences of subdivision (a) of former Probate Code Section 1138.3 (repealed by 1986 Cal. Stat. ch. 820 § 31). Subdivision (a) of Section 17002 substituted a criterion of day-to-day activity for the former reference to the location of the day-to-day records of the trust. For background on the provisions of this division, see the Comment to this division under the division heading.

§ 17003. Jurisdiction over trustees and beneficiaries

Comment. Section 17003 continues Section 17003 of the repealed Probate Code without change. This section is drawn from Section 7-103 of the Uniform Probate Code (1987) and is intended to facilitate the exercise of the court's power under this chapter. As to the construction of provisions drawn from uniform acts, see Section 2. As recognized by the introductory clause, constitutional limitations on assertion of jurisdiction apply to the exercise of jurisdiction under Section 17003. Consequently, appropriate notice must be given to a trustee or beneficiary as a condition of jurisdiction under this section. See, e.g., Mullane v. Central Hanover Bank & Trust Co., 339 U.S. 306 (1950). Section 17003 is not a limitation on the jurisdiction of the court over the trust, trust property, or parties to the trust. See Section 17004 (general basis of jurisdiction). See also Section 15800 (limits on rights of beneficiary of revocable trust).

Background on Section 17003 of Repealed Code

Section 17003 was a new provision added by 1986 Cal. Stat. ch. 820 § 40. For background on the provisions of this division, see the Comment to this division under the division heading.

§ 17004. Basis of jurisdiction over trust, trust property, and trust parties

Comment. Section 17004 continues Section 17004 of the repealed Probate Code without change.

Section 17004 recognizes that the court, in proceedings relating to internal trust affairs or other purposes described in Section 17000, may exercise jurisdiction on any basis that is not inconsistent with the California or United States Constitutions, as provided in Code of Civil Procedure Section 410.10. See generally Judicial Council Comment to Code Civ. Proc. § 410.10. In addition, Section 17003 codifies a basis of personal jurisdiction derived from concepts of presence in the state and consent to jurisdiction. However, personal jurisdiction over a trustee may be exercised where the trustee is found, regardless of the location of

the trust property. See Estate of Knox, 52 Cal. App. 2d 338, 348, 126 P.2d 108 (1942). Similarly, jurisdiction may be exercised to determine matters concerning trust property, particularly land, located in California even if the principal place of administration of the trust is not in California. See Restatement (Second) of Conflict of Laws § 276 & comments (1969); 5 A. Scott, The Law of Trusts §§ 644-47, at 4074-83 (3d ed. 1967).

A determination that a California court may exercise jurisdiction is not decisive if the exercise would be an undue interference with the jurisdiction of a court of another state which has primary supervision over the administration of the trust. See Estate of Knox, 52 Cal. App. 2d 338, 344-48, 126 P.2d 108 (1942); Schuster v. Superior Court, 98 Cal. App. 619, 623-28, 277 P. 509 (1929); Restatement (Second) of Conflict of Laws § 267 & comments (1969). This concept of primary supervision in the context of trust administration is a special application of the doctrine of forum non conveniens, which is recognized generally in Code of Civil Procedure Section 410.30.

Where the court has acquired jurisdiction over parties to a trust, jurisdiction continues over the parties and the subject of the proceeding, notwithstanding the removal from the state of a person or trust property, until the conclusion of the action or proceeding concerning the trust. See Code Civ. Proc. § 410.50(b); cf. Maloney v. Maloney, 67 Cal. App. 2d 278, 280, 154 P.2d 426 (1944) (jurisdiction over child custody issue).

Background on Section 17004 of Repealed Code

Section 17004 was a new provision added by 1986 Cal. Stat. ch. 820 § 40. For background on the provisions of this division, see the Comment to this division under the division heading.

§ 17005. Venue

Comment. Section 17005 continues Section 17005 of the repealed Probate Code without change. See also Section 17002 (principal place of administration of trust).

Subdivision (b) applies only to appointment of a trustee for a living trust that has no trustee. Proceedings to appoint a trustee for a testamentary trust that has no trustee are commenced in the county where the decedent's estate is administered. See subdivision (a)(2).

Subdivision (c) provides venue rules applicable in cases not covered by subdivisions (a) and (b), such as where jurisdiction over a trust, trust property, or parties to a trust is based on a factor other than the presence of the principal place of administration in this state. See Section 17004 (general basis of jurisdiction). Thus, for example, when the principal place of administration of a trust is in another state, but jurisdiction is

proper in California, the general rules governing venue apply. See, e.g., Code Civ. Proc. §§ 392 (real property), 395 (county of defendant's residence). This subdivision is drawn from Section 7-204 of the Uniform Probate Code (1987). As to the construction of provisions drawn from uniform acts, see Section 2.

Background on Section 17005 of Repealed Code

Section 17005 was added by 1986 Cal. Stat. ch. 820 § 40. Subdivision (a)(1) restated part of the first sentence of subdivision (a) of former Probate Code Section 1138.3 (repealed by 1986 Cal. Stat. ch. 820 § 31) without substantive change. Subdivision (a)(2) restated former Probate Code Section 1138.3(b) without substantive change and extended the former provision to all testamentary trusts. Subdivision (b) restated part of the first sentence of former Civil Code Section 2289 (repealed by 1986 Cal. Stat. ch. 820 § 7) without substantive change, except that it made clear that it applied only to appointment of a trustee for a living trust that has no trustee. For background on the provisions of this division, see the Comment to this division under the division heading.

§ 17006. Jury trial

Comment. Section 17006 continues Section 17006 of the repealed Probate Code without change. This section codifies the case law rule. See People v. One 1941 Chevrolet Coupe, 37 Cal. 2d 283, 286-87, 231 P.2d 832 (1951); C & K Engineering Contractors v. Amber Steel Co., 23 Cal. 3d 1, 8, 587 P.2d 1136, 151 Cal. Rptr. 323 (1978); Estate of Beach, 15 Cal. 3d 623, 642, 542 P.2d 994, 125 Cal. Rptr. 570 (1975).

Background on Section 17006 of Repealed Code

Section 17006 was a new provision added by 1986 Cal. Stat. ch. 820 § 40. For background on the provisions of this division, see the Comment to this division under the division heading.

CHAPTER 2. NOTICE

§ 17100. General notice provisions apply

Comment. Section 17100 is new. It supersedes Sections 17100-17107 of the repealed Probate Code.

Background on Sections 17100-17107 of Repealed Code

Sections 17100-17107 were added by 1986 Cal. Stat. ch. 820 § 40.

§ 17102. Manner of giving notice where address is unknown

Comment. Section 17102 is new. It is drawn in part from Section 17102(c) of the repealed Probate Code.

Background on Subdivision (c) of Section 17102 of Repealed Code

Section 17102 was added by 1986 Cal. Stat. ch. 820 § 40. Section 17102 superseded former Probate Code Section 1125.1 and part of the second paragraph of subdivision (a) of former Probate Code Section 1138.6 (provisions repealed by 1986 Cal. Stat. ch. 820 § 31). For background on the provisions of this division, see the Comment to this division under the division heading.

§ 17105. Court order not required for notice

Comment. Section 17105 continues Section 17105(b) of the repealed Probate Code without change.

Background on Subdivision (b) of Section 17105 of Repealed Code

Section 17105 was added by 1986 Cal. Stat. ch. 820 § 40. Subdivision (b) restated the second sentence of former Probate Code Section 1215.4 (repealed by 1986 Cal. Stat. ch. 820 § 35) without substantive change. For background on the provisions of this division, see the Comment to this division under the division heading.

CHAPTER 3. PROCEEDINGS CONCERNING TRUSTS

§ 17200. Petitioners; grounds for petition

Comment. Section 17200 continues Section 17200 of the repealed Probate Code without change.

The introductory clause of subdivision (a) has the effect of giving the right to petition concerning the internal affairs of a revocable living trust to the settlor (or other person holding the power to revoke) instead of the beneficiaries during the time that the settlor (or other person holding the power to revoke) is competent. See Section 15800 and the Comment thereto.

The list of grounds for a petition concerning the internal affairs of a trust under subdivision (b) is not exclusive and is not intended to preclude a petition for any other purpose that can be characterized as an internal affair of the trust. Paragraphs (1) and (2) of subdivision (b) are drawn from Section 7-201(a) of the Uniform Probate Code (1987). As to the construction of provisions drawn from uniform acts, see Section 2.

Various provisions elsewhere in this division relate to proceedings under this chapter. For limitations on the right of a beneficiary to compel the trustee to account or report under paragraph (7), see Sections 15800 and 16060-16064. As to granting powers to the trustee under paragraph (8), see Section 16201. As to the trustee's compensation under paragraph (9), see Sections 15680-15683; see also Section 15645 (costs and attorney's fees in proceedings for transfer of trust to successor trust company). As to breaches of trust involved in paragraph (12), see Sections 16400-16462. As to modification and termination of trusts under paragraph (13), see Sections 15400-15410. As to combining or dividing trusts under paragraph (14), see Sections 15411 and 15412. As to transfers of trusts under paragraph (16), see Sections 17400-17405 and 17450-17457. As to transfers of certain testamentary trusts within California under paragraph (17), see Section 17304. As to removal of certain testamentary trusts from continuing court jurisdiction under paragraph (18), see Section 17352.

The procedure provided in this chapter is available to determine matters concerning the administration of trusts notwithstanding a purported limitation or exclusion in the trust instrument. The provision of former Probate Code Section 1138.1(b) to the effect that the trust could restrict the availability of remedies is not continued.

See also Sections 24 ("beneficiary" defined), 82 ("trust" defined), 17005 (venue).

Background on Section 17200 of Repealed Code

Section 17200 was added by 1986 Cal. Stat. ch. 820 § 40 and was amended by 1990 Cal. Stat. [AB 831]. The section restated the substance of subdivision (a) of former Probate Code Section 1138.1 and superseded parts of former Probate Code Section 1120 (provisions repealed by 1986 Cal. Stat. ch. 820 § 31). The reference to determining the existence of a trust in subdivision (a) was new. Subdivision (a) also restated without substantive change part of former Probate Code Section 1139.1 and the first sentence of former Probate Code Section 1139.2 (petition for transfer of trust to another jurisdiction) and part of former Probate Code Section 1139.12 (petition for transfer to California) (provisions repealed by 1986 Cal. Stat. ch. 820 § 31). The introductory clause of subdivision (a) (referring to Section 15800) was new.

Paragraphs (1), (2), and (3) of subdivision (b) were new. Paragraph (5) restated parts of subdivisions (b) and (d) of former Civil Code Section 2269 (repealed by 1986 Cal. Stats. ch. 820 § 7) (review of exercise of discretionary powers) without substantive change. See Sections 16080-16081 (duties with regard to discretionary powers). Paragraph (9) superseded the last sentence of former Civil Code Section 2274 (repealed by 1986 Cal. Stats. ch. 820 § 7).

The 1990 amendment revised subdivision (b)(9) to make clear that the reasonableness of the trustee's compensation is subject to review on petition under this section. This revision was a clarification of prior law and not a substantive change. For background on this revision, see *Recommendation Relating to Trustees' Fees*, 20 Cal. L. Revision Comm'n Reports 185 (1990).

The provision of subdivision (b) of former Probate Code Section 1138.1 (repealed by 1986 Cal. Stat. ch. 820 § 31) to the effect that the trust could restrict the availability of remedies was not continued.

For background on the provisions of this division, see the Comment to this division under the division heading.

§ 17201. Commencement of proceeding

Comment. Section 17201 continues subdivision (a) of Section 17201 of the repealed Probate Code without change, except that the reference to verification is omitted as unnecessary. See Section 1021 (verification required). Subdivision (b) of repealed Section 17201 is not continued because this matter is governed by Section 1041 (clerk to set matter for hearing).

Background on Section 17201 of Repealed Code

Section 17201 was added by 1986 Cal. Stat. ch. 820 § 40. Subdivision (a) restated the first sentence of former Probate Code Section 1138.4 (repealed by 1986 Cal. Stat. ch. 820 § 31), except for the former provision relating to authorization by the terms of the trust. The provision of Section 17201 relating to the grounds of the petition superseded part of former Probate Code Section 1138.7 (repealed by 1986 Cal. Stat. ch.

820 § 31). Subdivision (a) also superseded parts of former Probate Code Sections 1123.5, 1123.6, 1128, 1139.2, and 1139.14 (provisions repealed by 1986 Cal. Stat. ch. 820 § 31). Subdivision (b) restated parts of former Probate Code Sections 1120(b), 1120.1a(d), 1123.5, 1125.1, 1129, 1138.6(a), 1139.3, and 1139.15 (provisions repealed by 1986 Cal. Stat. ch. 820 § 31) without substantive change. For background on the provisions of this division, see the Comment to this division under the division heading.

§ 17202. Dismissal of petition

Comment. Section 17202 continues Section 17202 of the repealed Probate Code without change. See also Section 17200(a) (who may petition).

Background on Section 17202 of Repealed Code

Section 17202 was added by 1986 Cal. Stat. ch. 820 § 40. The section restated subdivision (a) of former Probate Code Section 1138.5 (repealed by 1986 Cal. Stat. ch. 820 § 31) without substantive change. For background on the provisions of this division, see the Comment to this division under the division heading.

§ 17203. Notice

Comment. Section 17203 continues Section 17203 of the repealed Probate Code without change, except that the reference to notice to persons who are not petitioners is omitted. This matter is governed by Section 1201 (notice not required to person giving notice). See also Sections 17100-17105 (manner of notice).

Subdivision (b) recognizes that there are other rules governing which beneficiaries are entitled to notice. Under Section 15802, beneficiaries of revocable trusts are not entitled to notice during the time that the trust may be revoked, nor are such beneficiaries entitled to get notice even if they have requested special notice pursuant to Section 17204. Under Section 15804, the need to give notice is limited in the case of certain beneficiaries having future interests, but this limitation does not apply to beneficiaries who have requested special notice. See Section 15804(c)(1). These rules limit the requirement of notice whether the interest involved is that of a beneficiary of a private trust or that of a beneficiary of a charitable trust subject to jurisdiction of the Attorney General.

Subdivision (c) reflects the notice requirements of Government Code Section 12591. See also Section 24 ("beneficiary" defined).

Background on Section 17203 of Repealed Code

Section 17203 was added by 1986 Cal. Stat. ch. 820 § 40. The introductory paragraph and subdivisions (a) and (b) restated the first part of the second paragraph of subdivision (a) of former Probate Code Section 1138.6 (repealed by 1986 Cal. Stat. ch. 820 § 31) without substantive change. Subdivision (c) superseded part of subdivision (f) of former Probate Code Section 1120.1a, subdivision (d) of former Probate Code Section 1138.6, and the third sentence of former Probate Code Section 1139.3 (provisions repealed by 1986 Cal. Stat. ch. 820 § 31). Section 17203 also superseded

parts of former Probate Code Section 1125.1 and 1126 (provisions repealed by 1986 Cal. Stat. ch. 820 § 31). For background on the provisions of this division, see the Comment to this division under the division heading.

§ 17204. Request for special notice

Comment. Section 17204 restates Section 17204 of the repealed Probate Code without substantive change. The last five sentences are added to subdivision (a) for consistency with the general provisions relating to requests for special notice in Section 1250(e)-(f). Subdivision (c) makes clear that the restrictions on rights of beneficiaries of revocable trusts apply to the right to request special notice. Section 15804 limits the need to give notice to certain beneficiaries with future interests, but does not restrict the right of such beneficiaries to request special notice. See Section 15804(c)(1). See also Sections 1260-1265 (proof of notice).

Background on Section 17204 of Repealed Code

Section 17204 was added by 1986 Cal. Stat. ch. 820 § 40. The section superseded the former provisions relating to requests for special notice with regard to testamentary trusts in former Probate Code Sections 1120.5 (repealed by 1986 Cal. Stat. ch. 820 § 31) and Sections 1202 and 1202.5 (provisions repealed by 1987 Cal. Stat. ch. 923 § 59) and the former provisions relating to trusts in former Probate Code Sections 1200 and 1200.5 (provisions repealed by 1987 Cal. Stat. ch. 923 § 59).

§ 17205. Request for copy of petition

Comment. Section 17205 continues Section 17205 of the repealed Probate Code without change. This section provides the manner of determining to whom a copy of a petition in a particular proceeding should be sent.

Background on Section 17205 of Repealed Code

Section 17205 was added by 1986 Cal. Stat. ch. 820 § 40. The section restated the third paragraph of subdivision (a) of former Probate Code Section 1138.6 (repealed by 1986 Cal. Stat. ch. 820 § 31) without substantive change. For background on the provisions of this division, see the Comment to this division under the division heading.

§ 17206. Authority to make necessary orders; temporary trustee

Comment. Section 17206 continues Section 17206 of the repealed Probate Code without change.

Background on Section 17206 of Repealed Code

Section 17206 was added by 1986 Cal. Stat. ch. 820 § 40. The first part of the section continued former Probate Code Section 1138.2 and part of former Probate Code Section 1121 (provisions repealed by 1986 Cal. Stat. ch. 820 § 31) without substantive change. This section also superseded the last clause of subdivision (b) of former Probate Code Section 1120.6 (repealed by 1986 Cal. Stat. ch. 820 § 31). The authority to appoint a temporary trustee was new. For background on the provisions of this division, see the Comment to this division under the division heading.

§ 17207. Appeal

Comment. Section 17207 continues Section 17207 of the repealed Probate Code without change. See also Section 17202 (dismissal of petition).

Background on Section 17207 of Repealed Code

Section 17207 was added by 1986 Cal. Stat. ch. 820 § 40. For background on the provisions of this division, see the Comment to this division under the division heading.

Section 17207 superseded part of former Probate Code Section 1138.10 (repealed by 1986 Cal. Stat. ch. 820 § 31) and the part of Probate Code Section 1240 (repealed by 1987 Cal. Stat. ch. 923 § 59) that formerly related to trusts.

Unlike former law, Section 17207 listed unappealable orders, rather than appealable orders. Under this section, orders described in Section 17200 that were new to the law were made appealable. See, e.g., Section 17200(a) (determining existence of trust), (b)(1) (construction of trust instrument), (b)(2) (determining existence of any immunity, power, privilege, duty, or right).

Unlike the former statute, Section 17207 permits an appeal from the grant or denial of the following orders:

(1) Order for the modification or termination of a trust with uneconomically low principal. See former Civil Code § 2279.1 (repealed by 1986 Cal. Stats. ch. 820 § 7); former Prob. Code §§ 1138.1(a)(12), 1138.10 (repealed by 1986 Cal. Stats. ch. 820 § 31).

(2) Order for the amendment or conformance of a trust instrument to qualify for charitable estate tax deduction. See new Probate Code Section 17200(b)(15)).

(3) Order directing transfer of a testamentary trust subject to continuing court jurisdiction. See new Probate Code Section 17200(b)(17).

(4) Order reforming or excusing compliance with the governing instrument of an organization under Section 16105. See new Probate Code Section 17200(b)(19).

§ 17209. Intermittent judicial intervention in trust administration

Comment. Section 17209 continues Section 17209 of the repealed Probate Code without change.

Background on Section 17209 of Repealed Code

Section 17209 was added by 1986 Cal. Stat. ch. 820 § 40. The section restated former Probate Code Section 1138.12 (repealed by 1986 Cal. Stat. ch. 820 § 31) without substantive change. For background on the provisions of this division, see the Comment to this division under the division heading.

§ 17210. Enforcement of beneficiary's rights under charitable trust by Attorney General

Comment. Section 17210 continues Section 17210 of the repealed Probate Code without change. This section codifies the general rule that the Attorney General stands in the place of the beneficiaries of a charitable trust for purposes of enforcement of the trust. See Section 24 ("beneficiary" defined to include any person entitled to enforce the trust in the case of a charitable trust); see, e.g., People v. Cogswell, 113 Cal. 129, 136, 45 P. 270 (1896); Estate of Schloss, 56 Cal. 2d 248, 257, 363

P.2d 875, 14 Cal. Rptr. 643 (1961); see also Restatement (Second) of Trusts § 391 (1957).

Background on Section 17210 of Repealed Code

Section 17210 was a new provision added by 1986 Cal. Stat. ch. 820 § 40. For background on the provisions of this division, see the Comment to this division under the division heading.

CHAPTER 4. TESTAMENTARY TRUSTS SUBJECT TO CONTINUING COURT JURISDICTION

Article 1. Administration of Testamentary Trusts Subject to Continuing Court Jurisdiction

§ 17300. Application of article

Comment. Section 17300 continues Section 17300 of the repealed Probate Code without change. The effect of this section is to limit the application of provisions for continuing jurisdiction of the court to two classes of trusts: (1) trusts created by a will executed before July 1, 1977, when trusts were no longer required to be subject to continuing jurisdiction (see 1976 Cal. Stat. ch. 860 § 3), and not incorporated by reference thereafter, and (2) trusts that are specifically made subject to the continuing jurisdiction of the court by a provision in the trust instrument. A trust created by a will executed before July 1, 1977, which is incorporated by reference in a will thereafter, but that contains a provision making it subject to the continuing jurisdiction of the court, falls into the second class. See also Section 6130 (incorporation by reference in a will).

Background on Section 17300 of Repealed Code

Section 17300 was added by 1986 Cal. Stat. ch. 820 § 40. The section restated without substantive change a part of subdivision (a) of former Probate Code Section 1120, and the exception to former Section 1120 provided in the first sentence of subdivision (d) of former Probate Code Section 1120.1a (provisions repealed by 1986 Cal. Stat. ch. 820 § 31). For background on the provisions of this division, see the Comment to this division under the division heading.

§ 17301. Continuing court jurisdiction

Comment. Section 17301 continues Section 17301 of the repealed Probate Code without change.

Background on Section 17301 of Repealed Code

Section 17301 was added by 1986 Cal. Stat. ch. 820 § 40. The section preserved the continuing jurisdiction over testamentary trusts of the superior court where the decedent's estate was administered which was provided in subdivision (b) of former Probate Code Section 1120 (repealed by 1986 Cal. Stat. ch. 820 § 31). The incorporation of the grounds for a petition under Section 17200 continued the various grounds for invoking the court's continuing jurisdiction provided in subdivision (b) of former Probate Code Section 1120. For background on the provisions of this division, see the Comment to this division under the division heading.

§ 17302. Applicable procedures

Comment. Section 17302 continues Section 17302 of the repealed Probate Code without change. This section makes clear that the general procedures governing judicial proceedings relating to trusts apply to proceedings involving trusts that remain subject to continuing court jurisdiction. See Sections 17000-17210. This incorporation of the general provisions continues the substance of much of the law relating to trusts subject to continuing court jurisdiction because the general procedures are drawn in part from former Probate Code Section 1120 et seq. (provisions repealed by 1986 Cal. Stat. ch. 820, § 31). See the Comments to Sections 17000-17210. This article has the effect of making inapplicable the alternative venue over testamentary trusts provided in Section 17005. The other distinction between proceedings under this article and those under Section 17200 et seq. is that no filing fee is required when a petition relating to an account is filed under the continuing jurisdiction provided in this article. See Gov't Code § 26827.4(b). In other respects, the procedures are the same.

Background on Section 17302 of Repealed Code

Section 17302 was a new provision added by 1986 Cal. Stat. ch. 820 § 40. For background on the provisions of this division, see the Comment to this division under the division heading.

§ 17303. Effect of removal from continuing jurisdiction

Comment. Section 17303 continues Section 17303 of the repealed Probate Code without change. This section makes clear the relation between this article and Article 2 (commencing with Section 17350). After a trust is removed from continuing court jurisdiction, the general provisions of this part apply to the trust.

Background on Section 17303 of Repealed Code

Section 17303 was a new provision added by 1986 Cal. Stat. ch. 820 § 40. For background on the provisions of this division, see the Comment to this division under the division heading.

§ 17304. Transfer of jurisdiction over trust to different county

Comment. Section 17304 continues Section 17304 of the repealed Probate Code without change. For general provisions relating to petitions and other papers, see Sections 1020-1023, 17201; see also Sections 1021 (petition to be verified), 1041 (clerk to set petition for hearing). For general provisions relating to notice of hearing, see Sections 1200-1221, 15802, 17100-17105, 17203-17205; see also Sections 1260-1265 (proof of giving notice). For general provisions relating to hearings and orders, see Sections 1040-1050, 17000-17006, 17201-17202, 17206-17207.

Background on Section 17304 of Repealed Code

Section 17304 was added by 1986 Cal. Stat. ch. 820 § 40. The section restated the transfer provisions of former Probate Code Sections 1128 and 1129 (provisions repealed by 1986 Cal. Stat. ch. 820 § 31). Subdivision (a) continued the authority provided by the first sentence of former Probate Code Section 1128. Subdivision (b) restated the contents of the petition set forth in former Probate Code Section 1128 without substantive change. Subdivision (c) restated the fourth and fifth sentences of the first paragraph of former Probate Code Section 1129 without substantive change. Subdivision (d) continued the last sentence of the first paragraph of former Probate Code Section 1129 without substantive change. Subdivision (e) continued the second paragraph of former Probate Code Section 1129 without substantive change. For background on the provisions of this division, see the Comment to this division under the division heading.

Article 2. Removal of Trusts from Continuing Court Jurisdiction

§ 17350. Application of article

Comment. Section 17350 continues Section 17350 of the repealed Probate Code without change. See also Section 6130 (incorporation by reference in wills).

Background on Section 17350 of Repealed Code

Section 17350 was added by 1986 Cal. Stat. ch. 820 § 40. The section restated the first sentence of former Probate Code Section 1120.1a (repealed by 1986 Cal. Stat. ch. 820 § 31) without substantive change insofar as it provided an operative date for provisions relating to removal of trusts from continuing court jurisdiction. For background on the provisions of this division, see the Comment to this division under the division heading.

§ 17351. Removal of trust from continuing jurisdiction where trustee is trust company

Comment. Section 17351 continues Section 17351 of the repealed Probate Code without change. See Sections 1215 (notice sent to person's address), 1216 (personal delivery instead of mailing), 1260-1265 (proof of giving notice); see also Sections 24 ("beneficiary" defined), 83 ("trust company" defined).

Background on Section 17351 of Repealed Code

Section 17351 was added by 1986 Cal. Stat. ch. 820 § 40. The section restated subdivision (a) of former Probate Code Section 1120.1a (repealed by 1986 Cal. Stat. ch. 820 § 31) with some technical changes. For background on the provisions of this division, see the Comment to this division under the division heading.

§ 17352. Removal of trust from continuing jurisdiction where no trustee is trust company

Comment. Section 17352 continues Section 17352 of the repealed Probate Code without change. See Section 17000 (subject-matter jurisdiction of court). For general provisions relating to petitions and other papers, see Sections 1020-1023, 17201; see also Sections 1021

(petition to be verified), 1041 (clerk to set petition for hearing). For general provisions relating to notice of hearing, see Sections 1200-1221, 15802, 17100-17105, 17203-17205; see also Sections 1260-1265 (proof of giving notice). For general provisions relating to hearings and orders, see Sections 1040-1050, 17000-17006, 17201-17202, 17206-17207. See also Section 83 ("trust company" defined).

Background on Section 17352 of Repealed Code

Section 17352 was added by 1986 Cal. Stat. ch. 820 § 40. The section restated part of subdivision (d) of former Probate Code Section 1120.1a (repealed by 1986 Cal. Stat. ch. 820 § 31) with some technical changes. For background on the provisions of this division, see the Comment to this division under the division heading.

§ 17353. Removal by trust company as successor trustee

Comment. Section 17353 continues Section 17353 of the repealed Probate Code without change. See also Section 83 ("trust company" defined).

Background on Section 17353 of Repealed Code

Section 17353 was added by 1986 Cal. Stat. ch. 820 § 40. The section restated the first sentence of subdivision (g) of former Probate Code Section 1120.1a (repealed by 1986 Cal. Stat. ch. 820 § 31) without substantive change. For background on the provisions of this division, see the Comment to this division under the division heading.

§ 17354. Effect of change in trustees or other event on removal

Comment. Section 17354 continues Section 17354 of the repealed Probate Code without change.

Background on Section 17354 of Repealed Code

Section 17354 was added by 1986 Cal. Stat. ch. 820 § 40. The section restated the second sentence of subdivision (g) of former Probate Code Section 1120.1a (repealed by 1986 Cal. Stat. ch. 820 § 31) without substantive change. For background on the provisions of this division, see the Comment to this division under the division heading.

CHAPTER 5. TRANSFER OF TRUST TO ANOTHER JURISDICTION

§ 17400. Application of chapter

Comment. Section 17400 continues Section 17400 of the repealed Probate Code without change. Subdivision (a)(1) permits the transfer of oral trusts. See 15207 (oral trusts of personal property). Under the definition of "trust" in Section 82, this chapter also applies to charitable trusts. See 15004 (application of division to charitable trusts). See also Sections 17005 (venue), 17200(b)(16) (proceedings for transfer of trust).

Background on Section 17400 of Repealed Code

Section 17400 was added by 1986 Cal. Stat. ch. 820 § 40. Subdivision (a) restated subdivision (a) of former Probate Code Section 1139 (repealed by 1986 Cal. Stat. ch. 820 § 31) without substantive change, but subdivision (a)(1) of Section 17400 also

permitted the transfer of oral trusts. Subdivision (b) superseded subdivision (b) of former Probate Code Section 1139 (repealed by 1986 Cal. Stat. ch. 820 § 31). For background on the provisions of this division, see the Comment to this division under the division heading.

§ 17401. Transfer of place of administration or property from California

Comment. Section 17401 continues Section 17401 of the repealed Probate Code without change. See also Sections 62 ("property" defined), 17000 (subject-matter jurisdiction of superior court). Subdivision (b) makes clear that the general rules applicable under this part apply unless this chapter provides a different rule. See, e.g., Sections 17006 (jury trial), 17100-17105 (notice), 17200-17210 (proceedings).

Background on Section 17401 of Repealed Code

Section 17401 was added by 1986 Cal. Stat. ch. 820 § 40. Subdivision (a) restated the first part of former Probate Code Section 1139.1 without substantive change and superseded former Probate Code Section 1132 (provisions repealed by 1986 Cal. Stat. ch. 820 § 31). Subdivision (b) was new. For background on the provisions of this division, see the Comment to this division under the division heading.

§ 17402. Contents of petition

Comment. Section 17402 continues Section 17402 of the repealed Probate Code without change. For general provisions relating to petitions and other papers, see Sections 1020-1023, 17201; see also Sections 1021 (petition to be verified), 1041 (clerk to set petition for hearing). See also Sections 24 ("beneficiary" defined), 17200(a) (petition by trustee or beneficiary).

Background on Section 17402 of Repealed Code

Section 17402 was added by 1986 Cal. Stat. ch. 820 § 40. The section restated the part of former Probate Code Section 1139.2 (repealed by 1986 Cal. Stat. ch. 820 § 31) providing for the contents of the petition for transfer without substantive change. The reference in subdivision (b) to living beneficiaries restated part of former Probate Code Section 1139.7 (repealed by 1986 Cal. Stat. ch. 820 § 31) without substantive change. For background on the provisions of this division, see the Comment to this division under the division heading.

§ 17403. Notice and hearing

Comment. Section 17403 continues Section 17403 of the repealed Probate Code without change. See Section 17402 (places of residence listed in petition). For general provisions relating to notice of hearing, see Sections 1200-1221, 15802-15804, 17100-17105, 17203-17205; see also Sections 1260-1265 (proof of giving notice). For a provision governing notice to the Attorney General in a case involving a charitable trust, see Section 17203(c).

Background on Section 17403 of Repealed Code

Section 17403 was added by 1986 Cal. Stat. ch. 820 § 40. Subdivision (a) restated the second sentence of former Probate Code Section 1139.3 (repealed by 1986 Cal.

Stat. ch. 820 § 31) without substantive change. Subdivision (b) continued the fourth sentence of former Probate Code Section 1139.3 without substantive change. For background on the provisions of this division, see the Comment to this division under the division heading.

§ 17404. Order granting transfer

Comment. Section 17404 continues Section 17404 of the repealed Probate Code without change. For general provisions relating to hearings and orders, see Sections 1040-1050, 17000-17006, 17201-17202, 17206-17207.

Background on Section 17404 of Repealed Code

Section 17404 was added by 1986 Cal. Stat. ch. 820 § 40. The section restated without substantive change the introductory clause and subdivisions (1), (3), and (4) of former Probate Code Section 1139.4 (prerequisites for transfer) and part of former Probate Code Section 1139.1 (subject to limitation in trust) (provisions repealed by 1986 Cal. Stat. ch. 820 § 31), except that Section 17404 required the court to take into account the interest in economical and convenient administration rather than to find that it would necessarily result from the transfer. The requirement in subdivision (c) that the new trustee be willing was included for consistency with Section 17455(a)(3).

The discontinuation of subdivision (2) of former Probate Code Section 1139.4 (repealed by 1986 Cal. Stat. ch. 820 § 31) relating to "substantial rights of residents" was not intended to have any effect on the court's discretion to approve or disapprove a transfer.

For background on the provisions of this division, see the Comment to this division under the division heading.

§ 17405. Manner of transfer; discharge of trustee

Comment. Section 17405 continues Section 17405 of the repealed Probate Code without change. For general provisions relating to hearings and orders, see Sections 1040-1050, 17000-17006, 17201-17202, 17206-17207.

Background on Section 17405 of Repealed Code

Section 17405 was added by 1986 Cal. Stat. ch. 820 § 40. The section continued former Probate Code Section 1139.5 (repealed by 1986 Cal. Stat. ch. 820 § 31) without substantive change. For background on the provisions of this division, see the Comment to this division under the division heading.

CHAPTER 6. TRANSFER OF TRUST FROM ANOTHER JURISDICTION

§ 17450. Application of chapter

Comment. Section 17450 continues Section 17450 of the repealed Probate Code without change. Section 17450 makes this chapter applicable to the transfer to California of the place of administration of trusts or trust property administered in a jurisdiction outside California. Hence, this chapter applies to trusts administered in foreign countries as well as those administered in other states. See Section 82 ("trust"

defined). See also Section 17200(b)(16) (proceedings for transfer of trust).

Background on Section 17450 of Repealed Code

Section 17450 was added by 1986 Cal. Stat. ch. 820 § 40. Subdivision (a) restated subdivision (a) of former Probate Code Section 1139.10 (repealed by 1986 Cal. Stat. ch. 820 § 31) without substantive change, except that subdivision (a) of Section 17450 also permitted the transfer of oral trusts to California. See Section 15207 (oral trusts of personal property). See Section 82 ("trust" defined). Subdivision (b) superseded subdivision (b) of former Probate Code Section 1139.10 (repealed by 1986 Cal. Stat. ch. 820 § 31). For background on the provisions of this division, see the Comment to this division under the division heading.

§ 17451. Transfer of place of administration or property to California

Comment. Section 17451 continues Section 17451 of the repealed Probate Code without change. Subdivision (a) is comparable to Section 17401(a). See also Sections 62 ("property" defined), 17000 (subject matter jurisdiction in superior court). Subdivision (b) makes clear that the general rules applicable under this part apply unless this chapter provides a different rule.

Background on Section 17451 of Repealed Code

Section 17451 was added by 1986 Cal. Stat. ch. 820 § 40. Subdivision (a) restated former Probate Code Section 1139.11 (repealed by 1986 Cal. Stat. ch. 820 § 31) without substantive change. Subdivision (b) was new. For background on the provisions of this division, see the Comment to this division under the division heading.

§ 17452. Venue

Comment. Section 17452 continues Section 17452 of the repealed Probate Code without change. See also Section 17000 (subject matter jurisdiction of superior court).

Background on Section 17452 of Repealed Code

Section 17452 was added by 1986 Cal. Stat. ch. 820 § 40. The section restated former Probate Code Section 1139.13 (repealed by 1986 Cal. Stat. ch. 820 § 31) without substantive change. For background on the provisions of this division, see the Comment to this division under the division heading.

§ 17453. Contents of petition

Comment. Section 17453 continues Section 17453 of the repealed Probate Code without change. This section is comparable to Section 17402. For general provisions relating to petitions and other papers, see Sections 1020-1023, 17201; see also Sections 1021 (petition to be verified), 1041 (clerk to set petition for hearing). See also Sections 24 ("beneficiary" defined), 17200(a) (petition by trustee or beneficiary).

Background on Section 17453 of Repealed Code

Section 17453 was added by 1986 Cal. Stat. ch. 820 § 40. The section continued former Probate Code Section 1139.14 (repealed by 1986 Cal. Stat. ch. 820 § 31)

without substantive change, except that the statement of the age of the trustee is now required only of individual trustees. The reference in subdivision (b) to living beneficiaries restated part of former Probate Code Section 1139.19 (repealed by 1986 Cal. Stat. ch. 820 § 31) without substantive change. For background on the provisions of this division, see the Comment to this division under the division heading.

§ 17454. Notice and hearing

Comment. Section 17454 continues Section 17454 of the repealed Probate Code without change. See Section 17453 (places of residence listed in petition). Section 17454 is comparable to Section 17403. For general provisions relating to notice of hearing, see Sections 1200-1221, 15802-15804, 17100-17105, 17203-17205; see also Sections 1260-1265 (proof of giving notice). For a provision governing notice to the Attorney General in a case involving a charitable trust, see Section 17203(c).

Background on Section 17454 of Repealed Code

Section 17454 was added by 1986 Cal. Stat. ch. 820 § 40. Subdivision (a) restated the second sentence of subdivision (a) of former Probate Code Section 1139.15 (repealed by 1986 Cal. Stat. ch. 820 § 31) without substantive change. Subdivision (b) continued subdivision (b) of former Probate Code Section 1139.15 without change. For background on the provisions of this division, see the Comment to this division under the division heading.

§ 17455. Order accepting transfer and appointing trustee

Comment. Section 17455 continues Section 17455 of the repealed Probate Code without change. For general provisions relating to hearings and orders, see Sections 1040-1050, 17000-17006, 17201-17202, 17206-17207.

Background on Section 17455 of Repealed Code

Section 17455 was added by 1986 Cal. Stat. ch. 820 § 40. The section restated former Probate Code Section 1139.16 (repealed by 1986 Cal. Stat. ch. 820 § 31) without substantive change, except that (1) the court was required to take into account the interest in economical and convenient administration rather than to find that it would necessarily result from the transfer, (2) a bond was required only if the law of the other jurisdiction or California so provided, and (3) the court's authority to require bond under general provisions was recognized. See, e.g., Section 15602(a)(3) (bond required of trustee appointed by court). The reference to "assets" in former Probate Code Section 1139.16 was replaced with a reference to "property"; this was a non-substantive change. See Section 62 ("property" defined). For background on the provisions of this division, see the Comment to this division under the division heading.

§ 17456. Conditional order accepting transfer

Comment. Section 17456 continues Section 17456 of the repealed Probate Code without change. This section provides a method whereby the California court can indicate its willingness to accept jurisdiction over a trust administered in another jurisdiction where the law of the

other jurisdiction requires appointment of a trustee in the proposed new place of administration before approving transfer. See, e.g., Mass. Gen. Laws Ann. ch. 206, § 29 (West 1958). For general provisions relating to hearings and orders, see Sections 1040-1050, 17000-17006, 17201-17202, 17206-17207.

Background on Section 17456 of Repealed Code

Section 17456 was added by 1986 Cal. Stat. ch. 820 § 40. The section continued former Probate Code Section 1139.17 (repealed by 1986 Cal. Stat. ch. 820 § 31) without substantive change. The reference to "assets" in former Probate Code Section 1139.17 was replaced with a reference to "property"; this was a non-substantive change. See Section 62 ("property" defined). For background on the provisions of this division, see the Comment to this division under the division heading.

§ 17457. Administration of transferred trust; validity and construction of trust

Comment. Section 17457 continues Section 17457 of the repealed Probate Code without change. Under this section, a transferred trust is treated the same as a trust that was created in California, and so is governed by this division. See also Section 15004 (application of division to charitable trusts); Gov't Code §§ 12580-12598 (supervision of certain charitable trusts). This section is not intended to provide choice of law rules. A trust that was subject to judicial supervision in another state will not be subject to continuing court jurisdiction under Sections 17300-17304 unless the trust instrument so provides and the court so determines in the order accepting transfer to California.

The validity of the trust and the construction of its beneficial provisions are not affected by this section; the procedural and administrative provisions are covered by this section. See also Section 15400 (limitation on California rule that trust is revocable unless it provides otherwise).

Background on Section 17457 of Repealed Code

Section 17457 was added by 1986 Cal. Stat. ch. 820 § 40 and amended by 1987 Cal. Stat. ch. 128 § 19. The first sentence superseded former Probate Code Section 1139.18 (repealed by 1986 Cal. Stat. ch. 820 § 31). The second sentence was added by the 1987 amendment to make clear that the validity of the trust and the construction of its beneficial provisions are not affected by this section. For background on the provisions of this division, see the Comment to this division under the division heading.

PART 6. RIGHTS OF THIRD PERSONS

CHAPTER 1. LIABILITY OF TRUSTEE TO THIRD PERSONS

§ 18000. Personal liability of trustee to third persons on contracts

Comment. Section 18000 continues Section 18000 of the repealed Probate Code without change. Subdivision (a) is drawn from Section 7-306(a) of the Uniform Probate Code (1987). However, unlike the Uniform Probate Code, this section excuses the trustee from personal liability on a contract where *either* the trustee's representative capacity *or* the identity of the trust is revealed in the contract. Under Section 18000, it is assumed that either one of these statements in a contract puts the person contracted with on notice of the fact that the other person is a trustee. As to the construction of provisions drawn from uniform acts, see Section 2. The protection afforded the trustee by this section applies only to contracts that are properly entered into in the trustee's fiduciary capacity, meaning that the trustee is exercising an available power and is not violating a duty. This section does not excuse any liability the trustee may have for breach of trust. See Section 18005 (liability as between trustee and trust estate).

The rule provided in subdivision (a) is the reverse of the prior case-law rule in California that a trustee was personally liable on a contract unless the contract stipulated that the trustee was not liable. See Hall v. Jameson, 151 Cal. 606, 611-12, 91 P. 518 (1907); Duncan v. Dormer, 94 Cal. App. 218, 221, 270 P. 1003 (1928); but cf. Purdy v. Bank of America, 2 Cal. 2d 298, 301-02, 40 P.2d 481 (1935) (trust estate also liable when properly bound by acts of trustee). However, to fall within the rule of subdivision (a) of Section 18000, either the trustee's status or the identity of the trust must be revealed. This was not sufficient under prior case law. See Hall v. Jameson, supra. Subdivision (b) preserves the case-law rule governing a trustee's personal liability for pre-operative date contracts.

Background on Section 18000 of Repealed Code

Section 18000 was a new provision added by 1986 Cal. Stat. ch. 820 § 40. Subdivision (a) superseded former Civil Code Section 2267 (repealed by 1986 Cal. Stats. ch. 820 § 7) to the extent it affected liability. For background on the provisions of this division, see the Comment to this division under the division heading.

§ 18001. Personal liability of trustee arising from ownership or control of trust estate

Comment. Section 18001 continues Section 18001 of the repealed Probate Code without change. This section is the same in substance as part of Section 7-306(b) of the Uniform Probate Code (1987). As to the

construction of provisions drawn from uniform acts, see Section 2. A trustee is "personally at fault" when the trustee, either intentionally or negligently, acts or fails to act. For rules governing the assertion of claims, see Section 18004. The question of ultimate liability as between the trust and the trustee is governed by Section 18005.

Background on Section 18001 of Repealed Code

Section 18001 was a new provision added by 1986 Cal. Stat. ch. 820 § 40. For background on the provisions of this division, see the Comment to this division under the division heading.

§ 18002. Personal liability of trustee for torts

Comment. Section 18002 continues Section 18002 of the repealed Probate Code without change. This section is the same in substance as part of Section 7-306(b) of the Uniform Probate Code (1987). As to the construction of provisions drawn from uniform acts, see Section 2. A trustee is "personally at fault" when the trustee commits a tort either intentionally or negligently. Cf. Johnston v. Long, 30 Cal. 2d 54, 62-63, 181 P.2d 645 (1947) (liability of fiduciaries for torts committed by agents depends on personal fault). For rules governing the assertion of claims, see Section 18004. The question of ultimate liability as between the trust and the trustee is governed by Section 18005.

Background on Section 18002 of Repealed Code

Section 18002 was a new provision added by 1986 Cal. Stat. ch. 820 § 40. For background on the provisions of this division, see the Comment to this division under the division heading.

§ 18003. Liability of dissenting cotrustee to third persons

Comment. Section 18003 continues Section 18003 of the repealed Probate Code without change. This section is drawn from the Texas Trust Code. See Tex. Prop. Code Ann. § 114.006 (Vernon 1984).

Background on Section 18003 of Repealed Code

Section 18003 was a new provision added by 1986 Cal. Stat. ch. 820 § 40. For background on the provisions of this division, see the Comment to this division under the division heading.

§ 18004. Assertion of claims against trust

Comment. Section 18004 continues Section 18004 of the repealed Probate Code without change. This section is the same in substance as Section 7-306(c) of the Uniform Probate Code (1987). As to the construction of provisions drawn from uniform acts, see Section 2. Section 18004 alters the prior case law rule that the trustee could not be sued in a representative capacity where the trust estate was not liable. See Purdy v. Bank of America, 2 Cal. 2d 298, 301, 40 P.2d 481 (1935); Rapaport v. Forer, 20 Cal. App. 2d 271, 278, 66 P.2d 1242 (1937). See

also Sections 18000 (personal liability on contract), 18005 (liability as between trustee and trust estate).

Background on Section 18004 of Repealed Code

Section 18004 was added by 1986 Cal. Stat. ch. 820 § 40. The section superseded the first and last sentences of former Civil Code Section 2267 (repealed by 1986 Cal. Stats. ch. 820 § 7) (acts of trustee within scope of authority bind trust property). For background on the provisions of this division, see the Comment to this division under the division heading.

§ 18005. Liability as between trustee and trust estate

Comment. Section 18005 continues Section 18005 of the repealed Probate Code without change. This section is drawn from Section 7-306(d) of the Uniform Probate Code (1987). As to the construction of provisions drawn from uniform acts, see Section 2. Under this section, ultimate liability as between the estate and the trustee need not be determined before the third person's claim can be satisfied. It is permissible, and may be preferable, for judgment to be entered against the trust without determining the trustee's ultimate liability until later. Where judgment is entered against the trustee individually, the question of the trustee's right to reimbursement may be settled informally with the beneficiaries or in a separate proceeding in the probate court. For rules governing indemnification of trustees, see Section 15684. See also Section 17200 et seq. (proceedings against trustee by beneficiary).

Background on Section 18005 of Repealed Code

Section 18005 was a new provision added by 1986 Cal. Stat. ch. 820 § 40. For background on the provisions of this division, see the Comment to this division under the division heading.

CHAPTER 2. PROTECTION OF THIRD PERSONS

§ 18100. Protection of third person dealing with trustee

Comment. Section 18100 continues Section 18100 of the repealed Probate Code without change. This section is drawn from Section 7 of the Uniform Trustees' Powers Act (1964). As to the construction of provisions drawn from uniform acts, see Section 2.

Background on Section 18100 of Repealed Code

Section 18100 was added by 1986 Cal. Stat. ch. 820 § 40. The section superseded former Civil Code Section 2243 (repealed by 1986 Cal. Stats. ch. 820 § 7). For background on the provisions of this division, see the Comment to this division under the division heading.

§ 18101. Application of property delivered to trustee by third person

Comment. Section 18101 continues Section 18101 of the repealed Probate Code without change. This section is essentially the same as the last sentence of Section 7 of the Uniform Trustees' Powers Act (1964).

As to the construction of provisions drawn from uniform acts, see Section 2.

Background on Section 18101 of Repealed Code

Section 18101 was added by 1986 Cal. Stat. ch. 820 § 40. The section superseded former Civil Code Section 2244 (repealed by 1986 Cal. Stats. ch. 820 § 7). For background on the provisions of this division, see the Comment to this division under the division heading.

§ 18102. Protection of third person dealing with former trustee

Comment. Section 18102 continues Section 18102 of the repealed Probate Code without change. See also Section 15643 (vacancy in office of trustee).

Background on Section 18102 of Repealed Code

Section 18102 was added by 1986 Cal. Stat. ch. 820 § 40. The section restated the second paragraph of former Civil Code Section 2281 (repealed by 1986 Cal. Stats. ch. 820 § 7) without substantive change, but was drafted for consistency with Section 18100. For background on the provisions of this division, see the Comment to this division under the division heading.

§ 18103. Effect on third person of omission of trust from grant of real property

Comment. Section 18103 continues Section 18103 of the repealed Probate Code without change, except that the section is revised to extend to any person who enters into a transaction in good faith and for a valuable consideration, not only purchasers. See also Civil Code § 1214 (prior recording of subsequent conveyances).

Background on Section 18103 of Repealed Code

Section 18103 was added by 1986 Cal. Stat. ch. 820 § 40. The section continued former Civil Code Section 869 (repealed by 1986 Cal. Stats. ch. 820 § 5) without substantive change. For background on the provisions of this division, see the Comment to this division under the division heading.

§ 18104. Effect on real property transactions where beneficiary undisclosed

Comment. Section 18104 continues Section 18104 of the repealed Probate Code without substantive change, except that the presumption in subdivision (b) is revised to extend to any person who enters into a transaction in good faith and for a valuable consideration, not only purchasers and encumbrancers. The language relating to the presumptions affecting the burden of proof in both subdivisions (a) and (b) is consistent with Evidence Code Section 605.

Background on Section 18104 of Repealed Code

Section 18104 was added by 1986 Cal. Stat. ch. 820 § 40. The section restated the first two paragraphs of former Civil Code Section 869a (repealed by 1986 Cal. Stats. ch. 820 § 5) without substantive change. See Hansen v. G & G Trucking Co., 236 Cal. App. 2d 481, 491-94, 46 Cal. Rptr. 186 (1965) (presumption rebuttable, not

conclusive). For background on the provisions of this division, see the Comment to this division under the division heading.

CHAPTER 3. RIGHTS OF CREDITORS OF SETTLOR

§ 18200. Creditor's rights against revocable trust during settlor's lifetime

Comment. Section 18200 continues Section 18200 of the repealed Probate Code without change. This section is analogous to the rule applicable to property subject to an unexercised power of appointment created by a donor in favor of himself or herself. See Civil Code § 1390.4. Section 18200 permits the creditor to ignore the trust to the extent that it is revocable.

Background on Section 18200 of Repealed Code

Section 18200 was a new provision added by 1986 Cal. Stat. ch. 820 § 40. For background on the provisions of this division, see the Comment to this division under the division heading.

§ 18201. Creditor's rights against revocable trust after settlor's death

Comment. Section 18201 continues Section 18201 of the repealed Probate Code without change. This section is analogous to the rule applicable upon the death of a donee of a general testamentary power of appointment under Civil Code Section 1390.3(b).

Background on Section 18201 of Repealed Code

Section 18201 was a new provision added by 1986 Cal. Stat. ch. 820 § 40. For background on the provisions of this division, see the Comment to this division under the division heading.

DIVISION 10. PRORATION OF TAXES

Comment. This division supersedes Division 10 (commencing with 20100) of the repealed Probate Code. The superseded division was enacted upon recommendation of the California Law Revision Commission. See *Recommendation Relating to Proration of Estate Taxes,* 18 Cal. L. Revision Comm'n Reports 1127 (1986); *Communication from California Law Revision Commission Concerning Assembly Bill 2625,* 18 Cal. L. Revision Comm'n Reports 1743, 1758-59 (1986). The Commission, in cooperation with California Continuing Education of the Bar, published the recommended legislation as enacted with official comments. See *Selected 1986 Trust and Probate Legislation,* 18 Cal. L. Revision Comm'n Reports 1201, 1623-46 (1986).

CHAPTER 1. PRORATION OF ESTATE TAXES

Article 1. General Provisions

§ 20100. Definitions

Comment. Section 20100 continues Section 20100 of the repealed Probate Code without change.

The definition of "person interested in the estate" in subdivision (b) includes but is not limited to persons who receive property by nonprobate transfer, such as a joint tenant or the beneficiary of a trust.

Subdivision (c) defines "personal representative" broadly to include more than an executor, administrator, administrator with the will annexed, or special administrator.

The definition of "property" in subdivision (d) makes clear that the term includes property transferred by the decedent during life if included in the gross estate for federal estate tax purposes. See, e.g., I.R.C. § 2035. Cf. subdivision (b) ("person interested in estate" includes person who received property from a decedent while alive).

Subdivision (e) defines the term "value" to mean fair market value as determined for federal estate tax purposes. Thus, where an alternate valuation is elected pursuant to Section 2032 of the Internal Revenue Code, "value" means the fair market value determined as of the alternate valuation date for federal estate tax purposes. See Treas. Reg. § 20.2031-1(b), 26 C.F.R. § 20.2031-1(b) (1988).

This chapter does not apply to persons interested in the estate of a decedent who died before January 1, 1987. Prior law continues to apply where the decedent died before January 1, 1987. See Section 20101. As to the application of any amendments made after that date, see Section 3.

Background on Section 20100 of Repealed Code

Section 20100 was added by 1986 Cal. Stat. ch. 783 § 25. The section superseded former Probate Code Section 977 (repealed by 1986 Cal. Stat. ch. 783 § 16). The definition of "gross estate" in former Section 977(b) erroneously had the effect of prorating taxes to adjusted taxable gifts. For background on the provisions of this division, see the Comment to this division under the division heading.

§ 20101. Transitional provision

Comment. Section 20101 continues Section 20101 of the repealed Probate Code without substantive change.

Background on Section 20101 of Repealed Code

Section 20101 was a new provision added by 1986 Cal. Stat. ch. 783 § 25. For background on the provisions of this division, see the Comment to this division under the division heading.

Article 2. Proration

§ 20110. Proration among persons interested in estate

Comment. Section 20110 continues Section 20110 of the repealed Probate Code without change. The section recognizes that federal law may provide for a different manner of proration. See, e.g., I.R.C. § 2207A. In such a situation, proration of the California estate tax must conform to the federal proration.

Section 20110 allows proration of an extended estate tax prior to actual payment of the tax. See Section 20115 (proration of extended estate tax). Penalties and interest

on an estate tax are prorated pursuant to Section 20112 (allowance and charges for credits, deductions, interest, and other adjustments).

This chapter does not apply to persons interested in the estate of a decedent who died before 1, 1987. Prior law continues to apply where the decedent died before January 1, 1987. See Section 20101. As to the application of any amendments made after that date, see Section 3.

Background on Section 20110 of Repealed Code

Section 20110 was added by 1986 Cal. Stat. ch. 783 § 25. The section restated former Probate Code Section 970 (repealed by 1986 Cal. Stat. ch. 783 § 16) without substantive change, but recognized that federal law may provide for a different manner of proration. See, e.g., I.R.C. § 2207A. In such a situation, proration of the California estate tax must conform to the federal proration. For background on the provisions of this division, see the Comment to this division under the division heading.

§ 20111. Manner of proration

Comment. Section 20111 continues Section 20111 of the repealed Probate Code without change. The section does not require a court order to make the proration. Cf. Sections 20120-20125 for optional court procedure to determine proration.

The proration is made against all property included in the decedent's gross estate for federal estate tax purposes, including gifts includible in the estate pursuant to Section 2035 of the Internal Revenue Code. See Sections 20100 (definitions) and 20110 (proration among persons interested in estate) and the Comments thereto. The proration is based on fair market value as determined for federal estate tax purposes, even though the estate tax may be based on a special value. Adjustments for interest and penalties may be made on an equitable basis. See Section 20112 (allowance and charges for credits, deductions, interest, and other adjustments).

This chapter does not apply to persons interested in the estate of a decedent who died before January 1, 1987. Prior law continues to apply where the decedent died before January 1, 1987. See Section 20101. As to the application of any amendments made after that date, see Section 3.

Background on Section 20111 of Repealed Code

Section 20111 was added by 1986 Cal. Stat. ch. 783 § 25. The section continued former Probate Code Section 971 (repealed by 1986 Cal. Stat. ch. 783 § 16) without substantive change, but Section 20111 did not require a court order to make the proration as was required under former Section 971. For background on the provisions of this division, see the Comment to this division under the division heading.

§ 20112. Allowance and charges for credits, deductions, interest, and other adjustments

Comment. Section 20112 continues Section 20112 of the repealed Probate Code without change. Subdivision (a) refers to exemptions in anticipation of future enactment of exemptions. This chapter does not apply to persons interested in the estate of a decedent who died before January 1, 1987. Prior law continues to apply where the decedent died before January 1, 1987. See Section 20101. As to the application of any amendments made after that date, see Section 3.

Background on Section 20112 of Repealed Code

Section 20112 was added by 1986 Cal. Stat. ch. 783 § 25. Subdivisions (a) and (b) continued former Probate Code Section 972 (repealed by 1986 Cal. Stat. ch. 783 § 16) without substantive change. Although the federal estate tax exemption was replaced by a unified tax credit and other credits were allowed, subdivision (a) also referred to exemptions in anticipation of future enactment of exemptions. Subdivision (c) was new. For background on the provisions of this division, see the Comment to this division under the division heading.

§ 20113. Trusts and temporary interests

Comment. Section 20113 continues Section 20113 of the repealed Probate Code without change. This chapter does not apply to persons interested in the estate of a decedent who died before January 1, 1987. Prior law continues to apply where the decedent died before January 1, 1987. See Section 20101. As to the application of any amendments made after that date, see Section 3.

Background on Section 20113 of Repealed Code

Section 20113 was added by 1986 Cal. Stat. ch. 783 § 25. The section continued former Probate Code Section 973 (repealed by 1986 Cal. Stat. ch. 783 § 16) without substantive change. For background on the provisions of this division, see the Comment to this division under the division heading.

§ 20114. Proration of additional tax on certain qualified real property

Comment. Section 20114 continues Section 20114 of the repealed Probate Code without change. This section deals with specially valued real property. Where an election is made to specially value qualified real property under Internal Revenue Code Section 2032A, the qualified heirs who receive the qualified real property receive the entire benefit of the estate tax reduction resulting from the election and are likewise liable for

the entire amount of any additional tax subsequently imposed on the property. For example, assume an estate in which, absent a special valuation election, each beneficiary receives property of equal value and shares equally in the prorated estate taxes. If one beneficiary makes a special valuation election that reduces the total estate tax, the amount of the reduction must be allocated entirely to that beneficiary, and the others must pay the amount they would have been liable for absent the special valuation election.

To illustrate the operation of Section 20114, assume the decedent dies in 1987, leaving an estate consisting of $500,000 cash and real property having a fair market value of $500,000 (and a value under Internal Revenue Code Section 2032A of $250,000). The decedent's will leaves the real property to A and the cash to B.

(1) If no election is made under Section 2032A, the taxable estate is $1,000,000. The estate tax is $153,000, which is prorated $76,500 to A and $76,500 to B.

(2) If an election is made under Section 2032A, the taxable estate is $750,000. The estate tax is $55,500; the reduction in estate tax is $97,500. A is credited with $76,500 against the fair market value proration. (This represents the amount of the reduction in tax resulting from the election, to the extent of the tax that would be attributable to the qualified real property but for the election.) A pays no tax and B pays the full tax of $55,500, which represents a reduction of B's tax liability by $21,000.

Subdivision (b) ensures that A receives the benefit of the tax relief under Section 2032A, up to the amount of tax that would have been prorated to the fair market value of the qualified real property. B also benefits from the election, but no further compensating adjustment is required, except that if B shares the devise with other persons, the tax obligation of each of the others is reduced by a proportionate share of the $21,000 savings.

Subdivision (c) provides that any additional tax under Internal Revenue Code Section 2032A(c) will be imposed only upon those who received the qualified real property and benefited from the election. If A causes the full additional tax to be assessed under Internal Revenue Code Section 2032A(c), the entire additional tax of $97,500 will be prorated to A. This is true even though B also benefited from the election under Section 2032A.

This chapter does not apply to persons interested in the estate of a decedent who died before January 1, 1987. Prior law continues to apply where the decedent died before January 1, 1987. See Section 20101. As to the application of any amendments made after that date, see Section 3.

Background on Section 20114 of Repealed Code

Section 20114 was a new provision added by 1986 Cal. Stat. ch. 783 § 25. For background on the provisions of this division, see the Comment to this division under the division heading.

§ 20114.5. Excess retirement accumulations

Comment. Section 20114.5 continues Section 20114.5 of the repealed Probate Code without change. This section specifies the manner of proration of the 15 percent tax on excess retirement accumulations imposed by the Tax Reform Act of 1986, Pub. L. No. 99-514, § 1133(a). This chapter does not apply to persons interested in the estate of a decedent who died before January 1, 1987. Prior law continues to apply where the decedent died before January 1, 1987. See Section 20101. As to the application of any amendments made after that date, see Section 3.

Background on Section 20114.5 of Repealed Code

Section 20114.5 was a new provision added by 1987 Cal. Stat. ch. 128 § 20 and amended by 1987 Cal. Stat. ch. 923 § 100.5. It was also amended by 1989 Cal. Stat. ch. 544 § 18 to correct references to the Internal Revenue Code. For background on Section 20114.5, see *Communication from the California Law Revision Commission Concerning Assembly Bill 362*, 19 Cal. L. Revision Comm'n Reports 541, 543 (1988); see also *Communication from the California Law Revision Commission Concerning Assembly Bill 158*, 20 Cal. L. Revision Comm'n Reports 235, 242 (1990).

§ 20115. Proration of extended estate tax

Comment. Section 20115 continues Section 20115 of the repealed Probate Code without change. This section ensures that the persons who receive property that gives rise to the extension of estate tax are the persons who benefit from the extension privilege. With respect to allocation of any interest on the extension, see Section 20112 (allowance and charges for credits, deductions, interest, and other adjustments).

Section 20115 makes clear that where a decedent's estate consists of a closely held business with respect to which estate taxes may be extended, the deferred tax and interest thereon follow the business. If the persons who receive the property fail to pay the tax when due and the tax is collected from persons other than the persons to whom the tax is prorated, the persons from whom the tax is collected have a right of reimbursement against the persons to whom the tax is prorated. See Section 20117 (reimbursement for overpayment).

This chapter does not apply to persons interested in the estate of a decedent who died before January 1, 1987. Prior law continues to apply where the decedent died before January 1, 1987. See Section 20101. As to the application of any amendments made after that date, see Section 3.

Background on Section 20115 of Repealed Code

Section 20115 was a new provision added by 1986 Cal. Stat. ch. 783 § 25. For background on the provisions of this division, see the Comment to this division under the division heading.

§ 20116. Where property not in possession of personal representative

Comment. Section 20116 continues Section 20116 of the repealed Probate Code without change. Recovery of estate taxes pursuant to this section includes prorated interest and penalties. See Sections 20112 (allowance and charges for credits, deductions, interest, and other adjustments) and 20100(a) ("estate tax" defined).

The court may by order direct payment of the amount of taxes owed by a person to the personal representative. Section 20123 (court order to effectuate proration). As to costs incurred in enforcing a proration order, see Code Civ. Proc. § 685.040. Failure of the personal representative to make a good faith effort to collect taxes prorated against a person is a breach of the fiduciary obligation of the personal representative, for which the personal representative is liable personally and on the bond, if any.

This chapter does not apply to persons interested in the estate of a decedent who died before January 1, 1987. Prior law continues to apply where the decedent died before January 1, 1987. See Section 20101. As to the application of any amendments made after that date, see Section 3.

Background on Section 20116 of Repealed Code

Section 20116 was added by 1986 Cal. Stat. ch. 783 § 25. Subdivision (a) continued former Probate Code Section 975 (repealed by 1986 Cal. Stat. ch. 783 § 16) without substantive change. Subdivision (b) was new. For background on the provisions of this division, see the Comment to this division under the division heading.

§ 20117. Reimbursement for overpayment

Comment. Section 20117 continues Section 20117 of the repealed Probate Code without change. Subdivision (c) incorporates the judicial proration procedure, mutatis mutandis. This chapter does not apply to persons interested in the estate of a decedent who died before January 1, 1987. Prior law continues to apply where the decedent died before January 1, 1987. See Section 20101. As to the application of any amendments made after that date, see Section 3.

Background on Section 20117 of Repealed Code

Section 20117 was a new provision added by 1986 Cal. Stat. ch. 783 § 25. For background on the provisions of this division, see the Comment to this division under the division heading.

Article 3. Judicial Proceedings

§ 20120. Who may commence proceeding

Comment. Section 20120 continues Section 20120 of the repealed Probate Code without change. The general rules applicable to civil actions and proceedings, including the rules applicable to parties and pleadings, govern proceedings under this article. See Section 1000 (general rules of practice govern). This chapter does not apply to persons interested in the estate of a decedent who died before January 1, 1987. Prior law continues to apply where the decedent died before January 1, 1987. See Section 20101. As to the application of any amendments made after that date, see Section 3.

Background on Section 20120 of Repealed Code

Section 20120 was added by 1986 Cal. Stat. ch. 783 § 25. Sections 20120-20125 superseded (1) a portion of former Probate Code Section 971 (repealed by 1986 Cal. Stat. ch. 783 § 16), requiring court proration, and (2) a portion of former Probate Code Section 975 (repealed by 1986 Cal. Stat. ch. 783 § 16), providing for a court order for payment. For background on the provisions of this division, see the Comment to this division under the division heading.

§ 20121. Petition

Comment. Section 20121 continues Section 20121 of the repealed Probate Code without substantive change. See the Comment to Section 20120. The requirement that the petition be verified has been omitted in view of Section 1021 which imposes this as a general requirement. For general provisions, see Sections 1020-1023 (petitions and other papers).

Background on Section 20121 of Repealed Code

Section 20121 was added by 1986 Cal. Stat. ch. 783 § 25. Sections 20120-20125 superseded (1) a portion of former Probate Code Section 971 (repealed by 1986 Cal. Stat. ch. 783 § 16), requiring court proration, and (2) a portion of former Probate Code Section 975 (repealed by 1986 Cal. Stat. ch. 783 § 16), providing for a court order for payment. For background on the provisions of this division, see the Comment to this division under the division heading.

§ 20122. Notice of hearing

Comment. Section 20122 continues Section 20122 of the repealed Probate Code without change. See the Comment to Section 20120. For general provisions, see Sections 1200-1230 (notice of hearing), 1250-1252 (request for special notice), 1260-1265 (proof of giving of notice).

Background on Section 20122 of Repealed Code

Section 20122 was added by 1986 Cal. Stat. ch. 783 § 25. Sections 20120-20125 superseded (1) a portion of former Probate Code Section 971 (repealed by 1986 Cal. Stat. ch. 783 § 16), requiring court proration, and (2) a portion of former Probate Code Section 975 (repealed by 1986 Cal. Stat. ch. 783 § 16), providing for a court order for payment. For background on the provisions of this division, see the Comment to this division under the division heading.

§ 20123. Court order to effectuate proration

Comment. Section 20123 continues Section 20123 of the repealed Probate Code without change. The court order prorating an estate tax includes interest and penalties. See Section 20112 (allowance and charges for credits, deductions, interest, and other adjustments); see also Section 20100(a) ("estate tax" defined). For general provisions relating to hearings and orders, see Sections 1040-1049. This chapter does not apply to persons interested in the estate of a decedent who died before January 1, 1987. Prior law continues to apply where the decedent died before January 1, 1987. See Section 20101. As to the application of any amendments made after that date, see Section 3.

Background on Section 20123 of Repealed Code

Section 20123 was added by 1986 Cal. Stat. ch. 783 § 25. Subdivision (a) restated former Probate Code Section 976 (repealed by 1986 Cal. Stat. ch. 783 § 16) without substantive change. Subdivisions (b) and (c) were new. Sections 20120-20125 superseded (1) a portion of former Probate Code Section 971 (repealed by 1986 Cal. Stat. ch. 783 § 16), requiring court proration, and (2) a portion of former Probate Code Section 975 (repealed by 1986 Cal. Stat. ch. 783 § 16), providing for a court order for payment. For background on the provisions of this division, see the Comment to this division under the division heading.

§ 20124. Modification of court order

Comment. Section 20124 continues Section 20124 of the repealed Probate Code without change. This section provides for the possibility that subsequent to the making of an order, the taxes may be adjusted as a result of audit or the filing of an amended return. For general provisions relating to petitions, see Sections 1020-1023. The section does not apply to any additional tax under Internal Revenue Code Section 2032A(c) resulting from a disposition or cessation of qualified use of specially valued property. See Section 20114 (proration of additional tax on certain qualified real property). Section 20124 does not provide a limitation period for modification of a proration order; the matter is left to laches and other equitable doctrines within the discretion of the court.

This chapter does not apply to persons interested in the estate of a decedent who died before January 1, 1987. Prior law continues to apply where the decedent died before January 1, 1987. See Section 20101. As to the application of any amendments made after that date, see Section 3.

Background on Section 20124 of Repealed Code

Section 20124 was added by 1986 Cal. Stat. ch. 783 § 25. Sections 20120-20125 superseded (1) a portion of former Probate Code Section 971 (repealed by 1986 Cal. Stat. ch. 783 § 16), requiring court proration, and (2) a portion of former Probate Code Section 975 (repealed by 1986 Cal. Stat. ch. 783 § 16), providing for a court order for payment. For background on the provisions of this division, see the Comment to this division under the division heading.

§ 20125. Enforcement of out-of-state proration

Comment. Section 20125 continues Section 20125 of the repealed Probate Code without change. See also Code Civ. Proc. §§ 1710.10-1710.65 (sister state money-judgments). This chapter does not apply to persons interested in the estate of a decedent who died before January 1, 1987. Prior law continues to apply where the decedent died before January 1, 1987. See Section 20101. As to the application of any amendments made after that date, see Section 3.

Background on Section 20125 of Repealed Code

Section 20125 was a new provision added by 1986 Cal. Stat. ch. 783 § 25. Sections 20120-20125 superseded (1) a portion of former Probate Code Section 971 (repealed by 1986 Cal. Stat. ch. 783 § 16), requiring court proration, and (2) a portion of former Probate Code Section 975 (repealed by 1986 Cal. Stat. ch. 783 § 16), providing for a court order for payment. For background on the provisions of this division, see the Comment to this division under the division heading.

CHAPTER 2. PRORATION OF TAXES ON GENERATION-SKIPPING TRANSFERS

Comment. Sections 20200-20225 parallel comparable provisions of Chapter 1 (commencing with Section 20100) (proration of estate taxes). This chapter does not apply to transferees of property of a decedent who died before January 1, 1987. No inference as to the applicable law in effect before January 1, 1987, shall be drawn from the enactment of this chapter. See Section 20201. As to the application of any amendments made after that date, see Section 3.

Article 1. General Provisions

§ 20200. Definitions

Comment. Section 20200 continues Section 20200 of the repealed Probate Code without change.

Background on Section 20200 of Repealed Code

Section 20200 was a new provision added by 1986 Cal. Stat. ch. 783 § 25. For background on the provisions of this division, see the Comment to this division under the division heading.

§ 20201. Transitional provision

Comment. Section 20201 continues Section 20201 of the repealed Probate Code without substantive change.

Background on Section 20201 of Repealed Code

Section 20201 was a new provision added by 1986 Cal. Stat. ch. 783 § 25. For background on the provisions of this division, see the Comment to this division under the division heading.

Article 2. Proration

§ 20210. Proration among transferees

Comment. Section 20210 continues Section 20210 of the repealed Probate Code without change. Proration of a generation-skipping transfer tax includes proration of interest and penalties on any deficiency. See Sections 20200(a) ("generation-skipping transfer tax" defined) and 20212 (allowance and charges for credits, deductions, and interest).

This chapter does not apply to transferees of property of a decedent who died before January 1, 1987. No inference as to the applicable law in effect before January 1, 1987, shall be drawn from the enactment of this chapter. See Section 20201. As to the application of any amendments made after that date, see Section 3.

Background on Section 20210 of Repealed Code

Section 20210 was a new provision added by 1986 Cal. Stat. ch. 783 § 25. For background on the provisions of this division, see the Comment to this division under the division heading.

§ 20211. Manner of proration

Comment. Section 20211 continues Section 20211 of the repealed Probate Code without change. See the Comment to this chapter under the chapter heading.

Background on Section 20211 of Repealed Code

Section 20211 was a new provision added by 1986 Cal. Stat. ch. 783 § 25. For background on the provisions of this division, see the Comment to this division under the division heading.

§ 20212. Allowance and charges for credits, deductions, and interest

Comment. Section 20212 continues Section 20212 of the repealed Probate Code without change. See the Comment to this chapter under the chapter heading.

Background on Section 20212 of Repealed Code

Section 20212 was a new provision added by 1986 Cal. Stat. ch. 783 § 25. For background on the provisions of this division, see the Comment to this division under the division heading.

§ 20213. Trusts and temporary interests

Comment. Section 20213 continues Section 20213 of the repealed Probate Code without change. See the Comment to this chapter under the chapter heading.

Background on Section 20213 of Repealed Code

Section 20213 was a new provision added by 1986 Cal. Stat. ch. 783 § 25. For background on the provisions of this division, see the Comment to this division under the division heading.

§ 20214. Where property not in possession of trustee

Comment. Section 20214 continues Section 20214 of the repealed Probate Code without change. See the Comment to this chapter under the chapter heading.

Background on Section 20214 of Repealed Code

Section 20214 was a new provision added by 1986 Cal. Stat. ch. 783 § 25. For background on the provisions of this division, see the Comment to this division under the division heading.

§ 20215. Reimbursement for overpayment

Comment. Section 20215 continues Section 20215 of the repealed Probate Code without change. See the Comment to this chapter under the chapter heading.

Background on Section 20215 of Repealed Code

Section 20215 was a new provision added by 1986 Cal. Stat. ch. 783 § 25. For background on the provisions of this division, see the Comment to this division under the division heading.

Article 3. Judicial Proceedings

§ 20220. Who may commence proceeding

Comment. Section 20220 continues Section 20220 of the repealed Probate Code without change. See the Comment to this chapter under the chapter heading.

Background on Section 20220 of Repealed Code

Section 20220 was a new provision added by 1986 Cal. Stat. ch. 783 § 25. For background on the provisions of this division, see the Comment to this division under the division heading.

§ 20221. Petition

Comment. Section 20221 continues Section 20221 of the repealed Probate Code without substantive change. See the Comment to this chapter under the chapter heading. The requirement that the petition be verified has been omitted in view of Section 1021 which imposes this as a general requirement. For general provisions relating to petitions, see Sections 1020-1023.

Background on Section 20221 of Repealed Code

Section 20221 was a new provision added by 1986 Cal. Stat. ch. 783 § 25. For background on the provisions of this division, see the Comment to this division under the division heading.

§ 20222. Notice of hearing

Comment. Section 20222 continues Section 20222 of the repealed Probate Code without change. See the Comment to this chapter under the chapter heading. For general provisions, see Sections 1200-1230 (notice of hearing), 1250-1252 (request for special notice), 1260-1265 (proof of giving of notice).

Background on Section 20222 of Repealed Code

Section 20222 was a new provision added by 1986 Cal. Stat. ch. 783 § 25. For background on the provisions of this division, see the Comment to this division under the division heading.

§ 20223. Court order to effectuate proration

Comment. Section 20223 continues Section 20223 of the repealed Probate Code without change. See the Comment to this chapter under the chapter heading. For general provisions relating to hearings and orders, see Sections 1040-1049.

Background on Section 20223 of Repealed Code

Section 20223 was a new provision added by 1986 Cal. Stat. ch. 783 § 25. For background on the provisions of this division, see the Comment to this division under the division heading.

§ 20224. Modification of court order

Comment. Section 20224 continues Section 20224 of the repealed Probate Code without change. See the Comment to this chapter under the chapter heading. For general provisions relating to petitions, see Sections 1020-1023.

Background on Section 20224 of Repealed Code

Section 20224 was a new provision added by 1986 Cal. Stat. ch. 783 § 25. For background on the provisions of this division, see the Comment to this division under the division heading.

§ 20225. Enforcement of out-of-state proration

Comment. Section 20225 continues Section 20225 of the repealed Probate Code without change. See also Code Civ. Proc. §§ 1710.10-1710.65 (sister state money-judgments). This chapter applies to transferees of property of a decedent who dies on or after January 1, 1987; no inference as to the applicable law in effect before January 1, 1987, shall be drawn from the enactment of this chapter. See Section 20201. As to the application of any amendments made after that date, see Section 3.

Background on Section 20225 of Repealed Code

Section 20225 was a new provision added by 1986 Cal. Stat. ch. 783 § 25. For background on the provisions of this division, see the Comment to this division under the division heading.

DIVISION 11. CONSTRUCTION OF WILLS, TRUSTS, AND OTHER INSTRUMENTS

PART 1. GENERAL PROVISIONS

Comment. This part supersedes Part 1 (commencing with Section 21101) of Division 11 of the repealed Probate Code. The superseded part was enacted upon recommendation of the California Law Revision

Commission. See *Recommendation Relating to Marital Deduction Gifts,* 19 Cal. L. Revision Comm'n Reports 615, 623-624, 633, 635 (1988). See also *Communication from the California Law Revision Commission Concerning Assembly Bill 2841,* 19 Cal. L. Revision Comm'n Reports 1201, 1249 (1988).

§ 21101. Division applicable to wills, trusts, and other instruments

Comment. Section 21101 continues Section 21101 of the repealed Probate Code without change. See also Section 45 (defining "instrument").

This division does not apply to an instrument if its terms expressly or by necessary implication make this division inapplicable.

Background on Section 21101 of Repealed Code

Section 21101 was a new provision added by 1987 Cal. Stat. ch. 923 § 101. For background on the provisions of this part, see the Comment to this part under the part heading.

§ 21120. Satisfaction of a pecuniary gift

Comment. Section 21120 continues Section 21120 of the repealed Probate Code without change. This division does not apply to an instrument if its terms expressly or by necessary implication make this division inapplicable. See Section 21101.

Background on Section 21120 of Repealed Code

Section 21120 was added by 1987 Cal. Stat. ch. 923 § 101. Subdivision (a) restated subdivision (a) of former Probate Code Section 1033 (repealed by 1987 Cal. Stat. ch. 923 § 54.5) without substantive change. Subdivision (b) restated subdivision (a) of former Probate Code Section 1030 (repealed by 1987 Cal. Stat. ch. 923 § 54.5) without substantive change. For background on the provisions of this part, see the Comment to this part under the part heading.

PART 3. NO CONTEST CLAUSE

Comment. This part supersedes Part 3 (commencing with Section 21300) of Division 11 of the repealed Probate Code. The superseded part was enacted upon recommendation of the California Law Revision Commission. See *Recommendation Relating to No Contest Clauses,* 20 Cal. L. Revision Comm'n Reports 7 (1989). See also *Communication from the California Law Revision Commission Concerning Assembly Bill 158,* 20 Cal. L. Revision Comm'n Reports 235, 243-45 (1990).

CHAPTER 1. GENERAL PROVISIONS

§ 21300. Definitions

Comment. Section 21300 continues Section 21300 of the repealed Probate Code without change. It is intended for drafting convenience.

Under subdivision (a), an "attack" may initiate a proceeding (e.g., a contest by petition to revoke probate of a will) or may occur as an

objection in a proceeding (e.g., a contest by objection to probate of a will).

Subdivision (b) uses the term "no contest clause". This term has been used in the literature, as well as the term "in terrorem clause", to describe a provision of the type defined in this section.

This part governs trusts and other donative transfers as well as wills. See Section 21101 (application of division); see also Sections 24 ("beneficiary" defined) and 45 ("instrument" defined).

Background on Section 21300 of Repealed Code

Section 21300 was a new provision added by 1989 Cal. Stat. ch. 544 § 19. The section superseded a portion of former subdivision (d) of Section 6112 ("provision in a will that a person who contests or attacks the will or any of its provisions takes nothing under the will or takes a reduced share") that was deleted by 1989 Cal. Stat. ch. 544 § 4. For background on the provisions of this part, see the Comment to this part under the part heading.

§ 21301. Application of part

Comment. Section 21301 continues Section 21301 of the repealed Probate Code without change. It makes clear that this part is not a comprehensive treatment of the law governing no contest clauses. The section preserves the common law in matters not expressly addressed by this part. This is a special application of the rule stated in Civil Code Section 22.2 (common law as rule of decision in California courts). As used in this section, the "common law" does not refer to the common law as it existed in 1850 when the predecessor of Civil Code Section 22.2 was enacted; rather, the reference is to the contemporary and evolving rules of decision developed by the courts in exercise of their power to adapt the law to new situations and to changing conditions. Such issues, for example, as whether a contest that is later abandoned violates a no contest clause, whether an attack on the jurisdiction of the court violates the clause, and whether proceedings in estate administration other than a direct contest (including proceedings to set aside a small estate or probate homestead, to establish a family allowance, or to take as a pretermitted heir) violate the clause, continue to be governed by relevant case law except to the extent this part deals directly with the issue. The resolution of these matters is determined, in part, by the terms of the no contest clause and the character of the beneficiary's contest. See also Section 21304 (construction of no contest clause).

Background on Section 21301 of Repealed Code

Section 21301 was a new provision added by 1989 Cal. Stat. ch. 544 § 19. For background on the provisions of this part, see the Comment to this part under the part heading.

§ 21302. Instrument may not make contrary provision

Comment. Section 21302 continues Section 21302 of the repealed Probate Code without change. An instrument may not vary the rules provided in this part, since the rules are intended to implement the public policy of ensuring judicial access to information necessary for the proper administration of justice.

Background on Section 21302 of Repealed Code

Section 21302 was a new provision added by 1989 Cal. Stat. ch. 544 § 19. For background on the provisions of this part, see the Comment to this part under the part heading.

§ 21303. Validity of no contest clause

Comment. Section 21303 continues Section 21303 of the repealed Probate Code without change. A no contest clause is strictly construed. Section 21304 (construction of no contest clause). See also Sections 21301 (application of part) and 21302 (instrument may not make contrary provision).

Background on Section 21303 of Repealed Code

Section 21303 was a new provision added by 1989 Cal. Stat. ch. 544 § 19. It codified the existing California law recognizing the validity of a no contest clause. See, e.g., In re Estate of Hite, 155 Cal. 436, 101 P. 443 (1909). For background on the provisions of this part, see the Comment to this part under the part heading.

§ 21304. Construction of no contest clause

Comment. Section 21304 continues Section 21304 of the repealed Probate Code without change. As used in this section, the "transferor" is the testator, settlor, grantor, owner, or other person who executes an instrument. See Section 81 ("transferor" defined).

Background on Section 21304 of Repealed Code

Section 21304 was a new provision added by 1989 Cal. Stat. ch. 544 § 19. In the interest of predictability, it resolved a conflict in the case law in favor of strict construction. Cf. Garb, *The In Terrorem Clause: Challenging California Wills*, 6 Orange County B.J. 259 (1979). Strict construction is consistent with the public policy to avoid a forfeiture. Cf. Selvin, *Comment: Terror in Probate*, 16 Stan. L. Rev. 355 (1964). For background on the provisions of this part, see the Comment to this part under the part heading.

§ 21306. Forgery or revocation

Comment. Section 21306 continues Section 21306 of the repealed Probate Code without change. This section is not intended as a complete listing of acts that may be held exempt from enforcement of a no contest clause. See Section 21301 (application of part).

Background on Section 21306 of Repealed Code

Section 21306 was a new provision added by 1989 Cal. Stat. ch. 544 § 19. It codified existing case law. See, e.g., Estate of Lewy, 39 Cal. App. 3d 729, 113 Cal. Rptr. 674 (1974) (forgery); In re Estate of Bergland, 180 Cal. 629, 182 P. 277 (1919)

(revocation by subsequent will). For background on the provisions of this part, see the Comment to this part under the part heading.

§ 21307. Interested participant

Comment. Section 21307 continues Section 21307 of the repealed Probate Code without change.

As used in subdivision (b), a person who gave directions concerning dispositive or other substantive contents of a provision does not include a person who merely provided information such as birthdates, the spelling of names, and the like. Subdivision (b) only applies where the beneficiary directs the drafter of the instrument without concurrence of the transferor. The subdivision does not apply, for example, where the transferor and beneficiary together discuss the contents of the instrument with an estate planner and the transferor requests that the provision or the no contest clause be included in the instrument.

This section is not intended as a complete listing of acts that may be held exempt from enforcement of a no contest clause. See Section 21301 (application of part).

Background on Section 21307 of Repealed Code

Section 21307 was a new provision added by 1989 Cal. Stat. ch. 544 § 19. The section added a probable cause limitation to, and expanded and generalized, former subdivision (d) of Section 6112, which provided that a no contest clause does not apply to a contest or attack on a provision of the will that benefits a witness to the will. For background on the provisions of this part, see the Comment to this part under the part heading.

CHAPTER 2. DECLARATORY RELIEF

§ 21320. Declaratory relief authorized

Comment. Section 21320 continues Section 21305 of the repealed Probate Code without substantive change. Subdivision (a) authorizes a petition for construction of an instrument under the Probate Code. An action for declaratory relief under Code of Civil Procedure Section 1060 would not qualify for protection under subdivision (b), which is limited to a proceeding under subdivision (a).

Under subdivision (b), if a beneficiary seeks a determination whether a particular act would be considered "an attack in a proceeding on an instrument or on a provision in an instrument" within the meaning of the no contest clause, the request for such a determination cannot itself be considered an attack on the instrument or provision if made under subdivision (a). Subdivision (b) is not intended to enable a determination of the merits of an attack, but only whether a particular act would be considered an attack. Subdivision (b) is not intended as a complete listing of acts that may be held exempt from enforcement of a no contest clause. See Section 21301 (application of part).

Subdivision (c) emphasizes the point that this section is not intended to permit a determination on the merits by excluding from the coverage of the section a determination of the application of the two statutory exceptions to enforcement of a no contest clause.

Background on Section21305 of Repealed Code

Section 21305 was a new provision added by 1989 Cal. Stat. ch. 544 § 19. Subdivision (b) avoided the conflict in the case law concerning whether proceedings for declaratory relief may be held to violate a no contest clause by providing a "safe harbor" for a beneficiary who satisfies the requirements of subdivision (a). Cf. Garb, *The In Terrorem Clause: Challenging California Wills*, 6 Orange County B.J. 259 (1979). For background on the provisions of this part, see the Comment to this part under the part heading.

§ 21321. Proper court

Comment. Section 21321 is new.

§21322. Notice of hearing

Comment. Section 21322 is new.

PART 4. ABATEMENT

Comment. The provisions of this part apply to trusts and other instruments as well as to wills. See Section 21101.

This part supersedes Part 4 (commencing with Section 21400) of Division 11 of the repealed Probate Code. The superseded part was enacted upon recommendation of the California Law Revision Commission. See *Recommendation Relating to Abatement*, 19 Cal. L. Revision Comm'n Reports 865 (1988). See also *Communication from the California Law Revision Commission Concerning Assembly Bill 2841*, 19 Cal. L. Revision Comm'n Reports 1201, 1249 (1988).

§ 21400. Abatement subject to transferor's intent

Comment. Section 21400 continues Section 21400 of the repealed Probate Code without change. This section is drawn from subsection (b) of Section 3-902 of the Uniform Probate Code (1987). As to the construction of provisions drawn from uniform acts, see Section 2. See also Section 21101 (division applicable to wills, trusts, and other instruments). Section 21400 does not apply to a gift made before July 1, 1989. See Section 21406. As to the application of any amendments made after that date, see Section 3.

Background on Section 21400 of Repealed Code

Section 21400 was added by 1988 Cal. Stat. ch. 1199 § 108. The section generalized a number of provisions in then existing statutes. See former Prob. Code §§ 736 (repealed by 1988 Cal. Stat. ch. 1199 § 53), 750-752 (repealed by 1988 Cal. Stat. ch. 1199 § 53.5). The section was consistent with prior case law. See Estate of Jenanyan, 31 Cal. 3d 703, 646 P.2d 196, 183 Cal. Rptr. 525 (1982). For background on the provisions of this part, see the Comment to this part under the part heading.

§ 21401. Purposes for which abatement made

Comment. Section 21401 continues Section 21401 of the repealed Probate Code without change. See also Section 3-902 of the Uniform Probate Code (1987). As to the construction of provisions drawn from uniform acts, see Section 2. This section is subject to Section 21400 (abatement subject to transferor's intent). See also Section 21101 (division applicable to wills, trusts, and other instruments). Section 21401 does not apply to a gift made before July 1, 1989. See Section 21406. As to the application of any amendments made after that date, see Section 3.

Background on Section 21401 of Repealed Code

Section 21401 was added by 1988 Cal. Stat. ch. 1199 § 108. The section superseded a portion of the first sentence of former Probate Code Section 750 and a portion of the introductory clause of former Probate Code Section 751 (provisions repealed by 1988 Cal. Stat. ch. 1199 § 53.5). The provision that there is no priority as between real and personal property restated a provision formerly found in the California statutes. See former Probate Code Section 754 (first sentence) (repealed by 1988 Cal. Stat. ch. 1199 § 53.5). The provision was consistent with prior case law. See, e.g., In re Estate of Woodworth, 31 Cal. 595, 614 (1867). For background on the provisions of this part, see the Comment to this part under the part heading.

§ 21402. Order of abatement

Comment. Section 21402 continues Section 21402 of the repealed Probate Code without change. Under subdivision (b), "relatives" includes the transferor's blood relatives other than those who may not take from the transferor by intestate succession because of an adoption. See Section 6408 (adoption). "Relatives" also includes a spouse, as well as other persons who are not blood relatives but who are considered to be children or parents of the transferor for purposes of Sections 6401 and 6402 by virtue of provisions such as Section 6408 (adoptive, foster parent, and stepparent relationships). This section is subject to Section 21400 (abatement subject to transferor's intent). See also Section 21101 (division applicable to wills, trusts, and other instruments). Section 21402 does not apply to a gift made before July 1, 1989. See Section 21406. As to the application of any amendments made after that date, see Section 3.

Background on Section 21402 of Repealed Code

Section 21402 was added by 1988 Cal. Stat. ch. 1199 § 108. Paragraphs (1) and (2) of subdivision (a) of Section 21402 restated the first portion of the second sentence of former Probate Code Section 750 and all of former Probate Code Section 751 (provisions repealed by 1988 Cal. Stat. ch. 1199 § 53.5), and generalized those provisions to apply to other gifts as well as devises. The preference in subdivision (a) of Section 21402 for specific gifts in paragraphs (5) and (6) over general gifts in paragraphs (3) and (4) continued the rule of Estate of Jenanyan, 31 Cal. 3d 703, 711-12, 646 P.2d 196, 183 Cal. Rptr. 525 (1982). The preference in subdivision (a) of

Section 21402 for relatives in paragraphs (4) and (6) over nonrelatives in paragraphs (3) and (5) continued the last portion of former Probate Code Section 752 (repealed by 1988 Cal. Stat. ch. 1199 § 53.5). See also Estate of Buck, 32 Cal. 2d 372, 376, 196 P.2d 769 (1948); Estate of De Santi, 53 Cal. App. 2d 716, 719-21, 128 P.2d 434 (1942). For background on the provisions of this part, see the Comment to this part under the part heading.

§ 21403. Abatement within classes

Comment. Section 21403 continues Section 21403 of the repealed Probate Code without change. This section is subject to Section 21400 (abatement subject to transferor's intent). See also Section 21101 (division applicable to wills, trusts, and other instruments). Section 21403 does not apply to a gift made before July 1, 1989. See Section 21406. As to the application of any amendments made after that date, see Section 3.

Background on Section 21403 of Repealed Code

Section 21403 was added by 1988 Cal. Stat. ch. 1199 § 108. Subdivision (a) of Section 21403 restated a portion of the second sentence of former Probate Code Section 750 and a portion of former Probate Code Section 752 (provisions repealed by 1988 Cal. Stat. ch. 1199 § 53.5), superseded the first portion of former Probate Code Section 753 (repealed by 1988 Cal. Stat. ch. 1199 § 53.5) (if preferred devise sold, all devisees must contribute), and generalized those provisions to apply to other gifts as well as devises. Subdivision (b) of Section 21403 superseded the last portion of subdivision (c) of former Probate Code Section 662 (repealed by 1988 Cal. Stat. ch. 1199 § 52), and generalized it to apply to other gifts as well as devises. For background on the provisions of this part, see the Comment to this part under the part heading.

§ 21404. No exoneration by abatement of specific gift

Comment. Section 21404 continues Section 21404 of the repealed Probate Code without change. This section is subject to Section 21400 (abatement subject to transferor's intent). See also Section 21101 (division applicable to wills, trusts, and other instruments). Section 21404 does not apply to a gift made before July 1, 1989. See Section 21406. As to the application of any amendments made after that date, see Section 3.

Background on Section 21404 of Repealed Code

Section 21404 was added by 1988 Cal. Stat. ch. 1199 § 108. The section restated former Probate Code Section 736 (repealed by 1988 Cal. Stat. ch. 1199 § 53) and generalized it to apply to exoneration of personal as well as real property and to apply to other gifts as well as devises. For background on the provisions of this part, see the Comment to this part under the part heading.

§ 21405. Contribution in case of abatement

Comment. Section 21405 continues Section 21405 of the repealed Probate Code without change. Contribution may be required for abatement for any purpose, including sale of property for payment of

debts or expenses or family allowance. See Section 21401 (purposes for which abatement made). See also Section 21101 (division applicable to wills, trusts, and other instruments). Section 21405 does not apply to a gift made before July 1, 1989. See Section 21406. As to the application of any amendments made after that date, see Section 3.

Background on Section 21405 of Repealed Code

Section 21405 was added by 1988 Cal. Stat. ch. 1199 § 108. Subdivision (a) of Section 21405 restated the last portion of former Probate Code Section 753 (repealed by 1988 Cal. Stat. ch. 1199 § 53.5) without substantive change. Subdivision (b) was new. For background on the provisions of this part, see the Comment to this part under the part heading.

§ 21406. Transitional provision

Comment. Section 21406 continues Section 21406 of the repealed Probate Code without substantive change. See also Section 21101 (division applicable to wills, trusts, and other instruments).

Background on Section 21406 of Repealed Code

Section 21406 was a new provision added by 1988 Cal. Stat. ch. 1199 § 108. For background on the provisions of this part, see the Comment to this part under the part heading.

PART 5. COMPLIANCE WITH INTERNAL REVENUE CODE

Comment. This part supersedes Part 5 (commencing with Section 21500) of Division 11 of the repealed Probate Code. The superseded part was enacted upon recommendation of the California Law Revision Commission. See *Recommendation Relating to Marital Deduction Gifts,* 19 Cal. L. Revision Comm'n Reports 615, 625-32 (1988).

CHAPTER 1. GENERAL PROVISIONS

§ 21500. "Internal Revenue Code" defined

Comment. Section 21500 continues Section 21500 of the repealed Probate Code without change. See also Section 7 (amendments and additions).

Background on Section 21500 of Repealed Code

Section 21500 was added by 1987 Cal. Stat. ch. 923 § 101. Section 21500 restated subdivision (g) of former Section 1030 (repealed by 1987 Cal. Stat. ch. 923 § 54.5) without substantive change.

§ 21501. Application of part

Comment. Section 21501 continues Section 21501 of the repealed Probate Code without change.

Background on Section 21501 of Repealed Code

Section 21501 was added by 1987 Cal. Stat. ch. 923 § 101. Subdivision (a) was new. Subdivision (b) preserved the effect of the first sentence of subdivision (a) of former Section 1031 (repealed by 1987 Cal. Stat. ch. 923 § 54.5).

§ 21502. Effect of instrument on application of part

Comment. Section 21502 continues Section 21502 of the repealed Probate Code without change. This part applies to trusts as well as wills. See Section 21101 (division applicable to wills, trusts, and other instruments). Cf. former Section 15005 (repealed by 1987 Cal. Stat. ch. 923 § 99) (law applicable to marital deduction gifts in trust).

Background on Section 21502 of Repealed Code

Section 21502 was added by 1987 Cal. Stat. ch. 923 § 101. Subdivision (a) restated the second sentence of subdivision (a) of former Section 1031 (repealed by 1987 Cal. Stat. ch. 923 § 54.5) without substantive change. Subdivision (b) restated subdivision (b) of former Section 1031 without substantive change.

§ 21503. Application of formula clause to federal estate tax

Comment. Section 21503 continues Section 21503 of the repealed Probate Code without change. This section establishes rules of construction that apply formula clauses to the maximum extent possible, consistent with their intent. One effect of these rules is that a formula clause applies to the tax imposed by chapter 11 (commencing with Section 2001) of Subtitle B of the Internal Revenue Code and not to the tax imposed by Section 4980A of the Internal Revenue Code, which the formula clause cannot affect.

Background on Section 21503 of Repealed Code

Section 21503 was a new provision added by 1987 Cal. Stat. ch. 923 § 101.

CHAPTER 2. MARITAL DEDUCTION GIFTS

§ 21520. Definitions

Comment. Section 21520 continues Section 21520 of the repealed Probate Code without change. Whether an instrument contains a marital deduction gift depends upon the intention of the transferor at the time the instrument is executed.

Background on Section 21520 of Repealed Code

Section 21520 was added by 1987 Cal. Stat. ch. 923 § 101 and was amended by 1988 Cal. Stat. ch. 113 § 20. The section restated subdivisions (b) and (d) of former Section 1030 (repealed by 1987 Cal. Stat. ch. 923 § 54.5), and expanded them to apply to the gift tax as well as the estate tax. The 1988 amendment restored a missing word in subdivision (a).

§ 21521. Sections 21524 and 21526 not applicable to estate trust

Comment. Section 21521 continues Section 21521 of the repealed Probate Code without change.

Background on Section 21521 of Repealed Code

Section 21521 was added by 1987 Cal. Stat. ch. 923 § 101 and was amended by 1988 Cal. Stat. ch. 113 § 21. The section restated the fourth sentence of subdivision (a) of former Section 1032 (repealed by 1987 Cal. Stat. ch. 923 § 54.5) without substantive change and was amended in 1988 to make its application more precise.

§ 21522. Marital deduction gifts

Comment. Section 21522 continues Section 21522 of the repealed Probate Code without change.

Background on Section 21522 of Repealed Code

Section 21522 was added by 1987 Cal. Stat. ch. 923 § 101. Subdivisions (a) and (b) of Section 21522 restated the first three sentences of subdivision (a) of former Section 1032 (repealed by 1987 Cal. Stat. ch. 923 § 54.5) without substantive change. See Sections 21500 ("Internal Revenue Code" defined) and 21520 ("marital deduction gift" defined). Subdivision (c) restated subdivision (b) of former Section 1033 (repealed by 1987 Cal. Stat. ch. 923 § 54.5) without substantive change.

§ 21523. Maximum marital deduction for instrument dated before September 12, 1981

Comment. Section 21523 continues Section 21523 of the repealed Probate Code without substantive change. Subdivision (b) makes it possible to make a "QTIP" trust election in a pre-September 13, 1981, instrument under Internal Revenue Code Section 2056(b)(7) without thereby reducing the formula marital deduction gift on a dollar-for-dollar basis.

Background on Section 21523 of Repealed Code

Section 21523 was added by 1987 Cal. Stat. ch. 923 § 101. The section restated subdivision (c) of former Section 1030 and subdivisions (a) and (c) of former Section 1034 (provisions repealed by 1987 Cal. Stat. ch. 923 § 54.5) with the addition of a provision in subdivision (b) of Section 21523 to make it possible to make a "QTIP" trust election in a pre-September 13, 1981, instrument under Internal Revenue Code Section 2056(b)(7) without thereby reducing the formula marital deduction gift on a dollar-for-dollar basis. Subdivision (b) of former Section 1034 was omitted in conformity with the change in the generation-skipping transfer tax made by the Tax Reform Act of 1986, Pub. L. No. 99-514.

§ 21524. Marital deduction gift in trust

Comment. Section 21524 continues Section 21524 of the repealed Probate Code without change. Subdivision (d) provides for qualification of a QTIP trust that is silent about the payment of income between the last distribution date of the trust and the date of the spouse's death and also provides for qualification of a QTIP trust that mandates payment of income to the remaindermen. It should be noted that the limitations provided in this section do not apply to an "estate trust." See Section 21521 (section inapplicable to estate trust).

Background on Section 21524 of Repealed Code

Section 21524 was added by 1987 Cal. Stat. ch. 923 § 101. The section restated former Section 1035 (repealed by 1987 Cal. Stat. ch. 923 § 54.5), combining the concepts of former subdivisions (b) and (c) and revising subdivision (d) to provide for qualification of a QTIP trust that is silent about the payment of income between the last distribution date of the trust and the date of the spouse's death and, beyond that, to provide for qualification of a QTIP trust that mandates payment of income to the remaindermen.

§ 21525. Survival requirement for marital deduction gift

Comment. Section 21525 continues Section 21525 of the repealed Probate Code without substantive change. See I.R.C. § 2056(b)(3); 26 C.F.R. § 20.2056(b)-3.

Background on Section 21525 of Repealed Code

Section 21525 was added by 1987 Cal. Stat. ch. 923 § 101 and was amended by 1988 Cal. Stat. ch. 113 § 21.5. Subdivision (a) of Section 21525 restated former Probate Code Section 1036 (repealed by 1987 Cal. Stat. ch. 923 § 54.5) without substantive change. Subdivision (b) was new. Subdivision (c) was added by the 1988 amendment.

§ 21526. QTIP election

Comment. Section 21526 continues Section 21526 of the repealed Probate Code without change. This section is analogous to a portion of Section 1537d of 79 Kansas Statutes Annotated (1984). It provides protection for a partial, as well as a full, election.

Background on Section 21526 of Repealed Code

Section 21526 was added by 1987 Cal. Stat. ch. 923 § 101. The section superseded the fifth sentence of subdivision (a) of former Section 1032 (repealed by 1987 Cal. Stat. ch. 923 § 54.5).

CHAPTER 3. CHARITABLE GIFTS

§ 21540. Charitable remainder unitrusts and annuity trusts

Comment. Section 21540 continues Section 21540 of the repealed Probate Code without change. Whether an instrument contains a gift under this section depends upon the intention of the transferor at the time the instrument is executed.

Background on Section 21540 of Repealed Code

Section 21540 was added by 1987 Cal. Stat. ch. 923 § 101. The section restated subdivision (b) of former Probate Code Section 1032 (repealed by 1987 Cal. Stat. ch. 923 § 54.5) and applied it to living as well as testamentary trusts.

§ 21541. Charitable lead trusts

Comment. Section 21541 continues Section 21541 of the repealed Probate Code without change. This section extends the general approach of Section 21540 (charitable remainder unitrusts and annuity trusts) to include charitable lead trusts.

Background on Section 21541 of Repealed Code

Section 21541 was a new provision added by 1987 Cal. Stat. ch. 923 § 101.

APPENDIX

COMMENTS TO SECTIONS OF REPEALED PROBATE CODE NOT CONTINUED IN NEW CODE

§ 160 (repealed). Pay-on-death provisions

Comment. Section 160 of the repealed Probate Code is restated without substantive change in Section 5000 (nonprobate transfers at death).

§ 225 (repealed). Construction of chapter

Comment. Section 225 of the repealed Probate Code is omitted from the new Probate Code because it is unnecessary. See Section 2(b) (construction of uniform acts).

§ 269 (repealed). "P.O.D. account"

Comment. Section 269 of the repealed Probate Code is omitted from the new Probate Code because it is unnecessary. See Section 55 (applying the definition of "P.O.D. account" in Section 5140 to the new code).

§ 1406 (repealed). "Account in an insured savings and loan association"

Comment. Section 1406 of the repealed Probate Code is omitted from the new Probate Code because it is unnecessary. See Section 23 ("account in an insured savings and loan association" defined for new code).

§ 1410 (repealed). "Conservator"

Comment. Section 1410 of the repealed Probate Code is omitted from the new Probate Code because it is unnecessary. See Section 30 ("conservator" defined for new code).

§ 1411 (repealed). "Conservatee"

Comment. Section 1411 of the repealed Probate Code is omitted from the new Probate Code because it is unnecessary. See Section 29 ("conservatee" defined for new code).

§ 1443 (repealed). "Shares of an insured credit union"

Comment. Section 1443 of the repealed Probate Code is superseded by Section 23 ("account in an insured credit union" defined for new code).

§ 1450 (repealed). Petitions, reports, and accounts to be verified.

Comment. Section 1450 of the repealed Probate Code is omitted from the new Probate Code because it is unnecessary. See Section 1021(a) (verification required).

§ 1451 (repealed). Clerk to set matter for hearing

Comment. Section 1451 of the repealed Probate Code is omitted from the new Probate Code because it is unnecessary. See Section 1041 (clerk to set matters for hearing).

§ 1455 (repealed). Guardian ad litem

Comment. Section 1455 of the repealed Probate Code is omitted from the new Probate Code because it is unnecessary. See Section 1003 (guardian ad litem).

§ 1456 (repealed). Forms

Comment. Section 1456 of the repealed Probate Code is omitted from the new Probate Code because it is unnecessary. See Section 1001 (Judicial Council forms).

§ 1462 (repealed). Court may extend or shorten time for notice or require additional notice

Comment. Section 1462 of the repealed Probate Code is omitted from the new Probate Code because it is unnecessary. See Sections 1202 (additional notice on court order), 1203(a) (order shortening time).

§ 1463 (repealed). Postponement of hearings; notice

Comment. Section 1463 of the repealed Probate Code is omitted from the new Probate Code because it is unnecessary. See Section 1045 (continuance and postponement of hearings), 1205 (notice of continued or postponed hearings).

§ 1464 (repealed). Form of notice

Comment. Section 1464 of the repealed Probate Code is superseded by Section 1001(b) (Judicial Council forms).

§ 1465 (repealed). Manner of mailing; when mailing complete

Comment. Section 1465 of the repealed Probate Code is omitted from the new Probate Code because it is unnecessary. See Section 1215 (manner of mailing; when mailing complete).

§ 1466 (repealed). Personal delivery in lieu of mailing

Comment. Section 1466 of the repealed Probate Code is omitted from the new Probate Code because it is unnecessary. See Section 1216(a) (personal delivery instead of mailing).

§ 1468 (repealed). Proof of giving of notice

Comment. Section 1468 of the repealed Probate Code is omitted from the new Probate Code because it is unnecessary. See Sections 1260-1265 (proof of giving notice).

§ 1480 (repealed). Definitions

Comment. Section 1480 of the repealed Probate Code is omitted from the new Probate Code because it is no longer necessary.

§ 1481 (repealed). Effect on previously established guardianships and conservatorships generally

Comment. Section 1481 of the repealed Probate Code is omitted from the new Probate Code because it is no longer necessary. See Sections 2, 3.

§ 1482 (repealed). Effect on bonds and existing liabilities

Comment. Section 1482 of the repealed Probate Code is omitted from the new Probate Code because it is no longer necessary. See Sections 2, 3.

§ 1483 (repealed). Nomination, appointment, or confirmation made under prior law

Comment. Section 1483 of the repealed Probate Code is omitted from the new Probate Code because it is no longer necessary. See Sections 2, 3.

§ 1484 (repealed). Existing orders and pending matters arising under prior law

Comment. Section 1484 of the repealed Probate Code is omitted from the new Probate Code because it is no longer necessary. See Sections 2, 3.

§ 1485 (repealed). Effect on guardianships of adults and married minors

Comment. Section 1485 of the repealed Probate Code is omitted from the new Probate Code because it is no longer necessary. See Sections 2, 3.

§ 1487 (repealed). Review of conservatorships

Comment. Section 1487 of the repealed Probate Code is omitted from the new Probate Code because it is no longer necessary. See Sections 2, 3.

§ 1491 (repealed). Rules of Judicial Council

Comment. Section 1491 of the repealed Probate Code is superseded by Section 1001(a) (Judicial Council rules). See also Section 3 (general transitional provision).

§ 2575 (repealed). Investment in common trust fund

Comment. Section 2575 of the repealed Probate Code is omitted from the new Probate Code because it is unnecessary. The authority provided by former Section 2575 is duplicated in Section 2574(a)(6).

§ 2602 (repealed). Failure to file inventory and appraisal or account

Comment. Section 2602 of the repealed Probate Code is continued without substantive change in Section 2614.5 insofar as Section 2602 related to failure to file the inventory and appraisal. Insofar as former

Section 2602 related to failure to render an account, it is superseded by Section 2629.

§ 2703 (repealed). Proof of giving of notice

Comment. Section 2703 of the repealed Probate Code is omitted from the new Probate Code because it is unnecessary. See Section 1260 (proof of giving notice).

§ 3924 (repealed). Uniform construction

Comment. Section 3924 of the repealed Probate Code is omitted from the new Probate Code because it is unnecessary. See Section 2(b) (construction of uniform acts).

§ 6302 (repealed). Uniform construction

Comment. Section 6302 of the repealed Probate Code is omitted from the new Probate Code because it is unnecessary. See Section 2(b) (construction of uniform acts).

§ 6408.5 (repealed). Inheritance by natural relatives from or through adopted child or child born out of wedlock

Comment. Former Section 6408.5 is continued in Section 6408 without substantive change. Subdivision (a) of former Section 6408.5 is continued in subdivision (b) of Section 6408 without substantive change. Subdivision (b) of former Section 6408.5 is continued in subdivision (c) of Section 6408 without change. Subdivision (c) of former Section 6408.5 is continued in subdivision (d) of Section 6408 without change.

§ 9612 (repealed). Effect of court authorization or approval

Comment. Section 9612 of the repealed Probate Code is continued without substantive change in Section 7250(a) (effect of court authorization or approval).

§ 10600 (repealed). Statutory Waiver of Notice of Proposed Action Form

Comment. Section 10600 of the repealed Probate Code is omitted from the new Probate Code because it is unnecessary. See Section 1001 (Judicial Council forms).

§ 11006 (repealed). Effect of order settling an account

Comment. Section 11006 of the repealed Probate Code is omitted from the new Probate Code because the effect of an order settling an account is now governed by Section 7250 (effect of order made pursuant to provisions of this code concerning the administration of the decedent's estate).

§ 12409 (repealed). Application of part

Comment. Section 12409 of the repealed Probate Code is omitted from the new Probate Code because it has served its purpose in the

transition to the law that became operative on January 1, 1984. See 1987 Cal. Stat. ch. 923, § 93. See also Section 3 (general transitional provision).

§ 12574 (repealed). Transitional provision

Comment. Section 12574 of the repealed Probate Code is omitted from the new Probate Code because it has served its purpose in the transition to the law that became operative on July 1, 1989. See 1989 Cal. Stat. ch. 1199, § 94.5. See also Section 3 (general transitional provision).

§ 13209 (repealed). Judicial Council to prescribe form of affidavit

Comment. Section 13209 of the repealed Probate Code is omitted from the new Probate Code because it is unnecessary. See Section 1001(b) (Judicial Council forms).

§ 15006 (repealed). Judicial Council to prescribe forms

Comment. Section 15006 of the repealed Probate Code is omitted from the new Probate Code because it is unnecessary. See Section 1001(b) (Judicial Council forms).

§ 17101 (repealed). Form of notice

Comment. Section 17101 of the repealed Probate Code is omitted from the new Probate Code because it is unnecessary. See Sections 1001(b) (Judicial Council forms), 17100 (general notice provisions apply).

§ 17103 (repealed). Personal delivery instead of mailing

Comment. Section 17103 of the repealed Probate Code is omitted from the new Probate Code because it is unnecessary. See Section 1216(a) (personal delivery instead of mailing). See also 17100 (general notice provisions apply).

§ 17104 (repealed). Proof of giving notice; conclusiveness of order

Comment. Section 17104 of the repealed Probate Code is superseded by Section 1260 (proof of giving notice). See also 17100 (general notice provisions apply).

§ 17106 (repealed). Shortening time

Comment. Section 17106 of the repealed Probate Code is omitted from the new Probate Code because it is unnecessary. See Section 1203 (order shortening time). See also 17100 (general notice provisions apply).

§ 17107 (repealed). Notice of postponed hearings

Comment. Section 17107 of the repealed Probate Code is omitted from the new Probate Code because it is unnecessary. See Section 1045 (continuance and postponement of hearings), 1205 (notice of continued

or postponed hearings). See also 17100 (general notice provisions apply).

§ 21305. (repealed). Declaratory relief

Comment. Former Section 21305 is continued in Section 21320 of the new Probate Code without substantive change.

CONFORMING REVISIONS IN OTHER CODES

Civil Code § 683 (technical amendment). Joint tenancy

Comment. Subdivision (b) of Section 683 is amended to correct a cross-reference. This is a technical, nonsubstantive change.

Civil Code § 954 (amended). Things in action

Comment. The second sentence of Section 954 is deleted because it is unnecessary and is an inadequate statement of the applicable law. The substantive rules concerning passage of causes of action are stated elsewhere. See, e.g., Code Civ. Proc. § 353; Prob. Code §§ 573, 7000-7001. This amendment is not a substantive change.

Financial Code § 852 (technical amendment). Multiple-party accounts

Comment. Section 852 is amended to correct a cross-reference. This is a technical, nonsubstantive change.

Financial Code § 952 (technical amendment). Multiple-party accounts

Comment. Section 952 is amended to correct a cross-reference. This is a technical, nonsubstantive change.

Financial Code § 6661 (technical amendment). Notice of adverse claim to savings account or personal property

Comment. Subdivision (d) of Section 6661 is amended to correct a cross-reference. This is a technical, nonsubstantive change.

Financial Code § 6800 (technical amendment). Multiple-party accounts

Comment. Section 6800 is amended to correct a cross-reference. This is a technical, nonsubstantive change.

Financial Code § 6804 (technical amendment). Nonliability for taxes

Comment. Section 6804 is amended to correct a cross-reference. This is a technical, nonsubstantive change.

Financial Code § 6855 (technical amendment). Nonliability for taxes

Comment. Section 6855 is amended to correct a cross-reference. This is a technical, nonsubstantive change.

Financial Code § 14854 (technical amendment). Multiple-party accounts in credit unions

Comment. Section 14854 is amended to correct cross-references. These are technical, nonsubstantive changes.

Financial Code § 14860 (technical amendment). Trust powers of credit unions

Comment. Section 14860 is amended to correct a cross-reference. This is a technical, nonsubstantive change.

Financial Code § 18318.5 (technical amendment). Multiple-party accounts

Comment. Section 18318.5 is amended to correct a cross-reference. This is a technical, nonsubstantive change.

Health & Safety Code § 8751.1 (technical amendment). Authorized investments for private cemeteries

Comment. Section 8751.1 is amended to correct a cross-reference to the law governing investments made by trustees.

(1997-2000 Blank)